VIDE-V20471

# JVC

# SERVICE MANUAL

## DIGITAL S VIDEO CASSETTE RECORDER & PLAYER

# BR-D85E/BR-D80E/BR-D50E

**BR-D85E/BR-D80E**
**(DIGITAL S VIDEO CASSETTE RECORDER)**

**BR-D50E**
**(DIGITAL S VIDEO CASSETTE PLAYER)**

DIGITAL S

## SPECIFICATIONS

**GENERAL**

| | |
|---|---|
| Format | : Digital S |
| Tape width | : 12.65 mm |
| Tape speed | : 57.795 mm/sec |
| Signal format | : PAL standard |
| Dimensions | : 429 (W) x 188 (H) x 567 (D) mm |
| Weight | : Approx. 22 kg (BR-D85E/BR-D80E)<br>Approx. 21 kg (BR-D50E) |
| Power consumption | : Approx. 830 mA (BR-D85E)<br>Approx. 800 mA (BR-D80E)<br>Approx. 600 mA (BR-D50E) |
| Power supply | : AC 220 V - 240 V 50/60 Hz |
| Record/Play time (w/DS-104) | : (Record/Play) Approx. 104 min. (BR-D85E/BR-D80E)<br>(Play) Approx. 104 min. (BR-D50E) |
| REW/FF time (w/DS-104) | : Approx. 3 min. |
| Operating temperature | : +5 to +40°C |
| Storage temperature | : –20 to +60°C |
| Operating humidity | : 30% to 80%RH |

**VIDEO SIGNAL**

| | | |
|---|---|---|
| Input | Composite | : 1 Vpp 75 ohms, unbalanced (BR-D85E/BR-D80E) |
| | YC 443 | : Y:1Vp-p/C:0.3 Vp-p<br>75 ohms, unbalanced (BR-D85E/BR-D80E) |
| | Component | : Y:1Vp-p /R-Y, B-Y:0.7 Vp-p<br>75 ohms, unbalanced (BR-D85E/BR-D80E) |
| | Serial digital | : Comformity with SMPTE 259M 800 mVp-p ± 10%<br>75 ohms unbalanced 270 Mb/sec |
| Output | Composite | : 1Vp-p 75 ohms, unbalanced |
| | YC 443 | : Y:1Vp-p /C:0.3 Vp-p 75 ohms, unbalanced |
| | Component | : Y:1Vp-p /R-Y, B-Y:0.7 Vp-p 75 ohms, unbalanced |
| | Serial digital | : Comformity with SMPTE 259M 800 mVp-p ± 10%<br>75 ohms unbalanced 270 Mb/sec |
| External sync input | | : 0.3 Vp-p, 75 ohms, unbalanced |
| Sampling frequency | | : Y: 13.5 MHz, R-Y/B-Y: 6.75 MHz |
| Quantization | | : 8 bits |
| Frequency range | | : Y:0 to 5.0 MHz + 1.0 dB/–6 dB<br>(Analog component in/out)<br>R-Y/B-Y: 0 to 2 MHz + 1.0 dB/– 1.5 dB |
| S/N | | : More than 50 dB (BR-D85E/BR-D80E)<br>(Analog composite in/out)<br>More than 52 dB (BR-D85E/BR-D80E)<br>(Analog component in/out)<br>More than 55 dB (BR-D85E)<br>(Digital in/analog component out) |

**AUDIO SIGNAL**

| | | |
|---|---|---|
| Input | Line input | : –6/+4 dBs high impedance, balanced<br>(BR-D85E/BR-D80E) |
| | Digital audio | : Conformity with AES/EBU 1Vp-p 75 ohms, unbalanced<br>(BR-D85E) |
| Output | Line output | : –6/+4 dBs low impedance, balanced |
| | Digital audio | : Conformity with AES/EBU 1Vp-p 75 ohms, unbalanced<br>(BR-D85E) |
| | Monitor output | : –6 dBs low impedance, unbalanced |
| | Headphone | : –∞ to –20 dBs, 8 ohms |
| Sampling frequency | | : 48 kHz |
| Quantization | | : 16 bits |
| No. of channels | | : 2 |
| Frequency response | | : 20 Hz to 20 kHz |
| Dynamic range | | : 85 dB or more |
| Wow & Flutter | | : Below a measurable value |

**TIME CODE (LTC)**

| | |
|---|---|
| Input | : 0 ± 6 dBs high impedance unbalanced<br>(BR-D85E/BR-D80E) |
| Output | : 0 ± 3 dBs low impedance unbalanced |

**ACCESSORIES** : Power cable x 1

Design and specifications subject to change without notice.

COPYRIGHT © 1996 VICTOR COMPANY OF JAPAN, LTD.

**No. 9337**
**November 1996**

# TABLE OF CONTENTS

Important Safety Precautions

INSTRUCTIONS

Sec. 1 SERVICE CAUTIONS AND DISASSEMBLY

Sec. 2 MECHANISM ADJUSTMENT

Sec. 3 ELECTRICAL ADJUSTMENT

Sec. 4 DIAGRAMS AND CIRCUIT BOARDS

Sec. 5 EXPLODED VIEWS AND PARTS LIST

Sec. 6 ELECTRICAL PARTS LIST

Sec. 7 PACKING

Sec. 8 CIRCUIT DESCRIPTION

# Important Safety Precautions

Prior to shipment from the factory, JVC products are strictly inspected to conform with the recognized product safety and electrical codes of the countries in which they are to be sold. However, in order to maintain such compliance, it is equally important to implement the following precautions when a set is being serviced.

## ● Precautions during Servicing

1. Locations requiring special caution are denoted by labels and inscriptions on the cabinet, chassis and certain parts of the product. When performing service, be sure to read and comply with these and other cautionary notices appearing in the operation and service manuals.

2. Parts identified by the ⚠ symbol and shadad (▒▒) parts are critical for safety.
   Replace only with specified part numbers.
   Note: Parts in this category also include those specified to comply with X-ray emission standards for products using cathode ray tubes and those specified for compliance with various regulations regarding spurious radiation emission.

3. Fuse replacement caution notice.
   Caution for continued protection against fire hazard.
   Replace only with same type and rated fuse(s) as specified.

4. Use specified internal wiring. Note especially:
   1) Wires covered with PVC tubing
   2) Double insulated wires
   3) High voltage leads

5. Use specified insulating materials for hazardous live parts. Note especially:
   1) Insulation Tape
   2) PVC tubing
   3) Spacers
   4) Insulation sheets for transistors
   5) Barrier

6. When replacing AC primary side components (transformers, power cords, noise blocking capacitors, etc.) wrap ends of wires securely about the terminals before soldering.

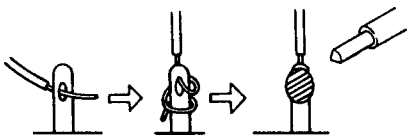

Fig. 1

7. Observe that wires do not contact heat producing parts (heat-sinks, oxide metal film resistors, fusible resistors, etc.)

8. Check that replaced wires do not contact sharp edged or pointed parts.

9. When a power cord has been replaced, check that 10–15 kg of force in any direction will not loosen it.

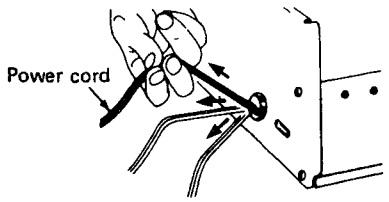


Fig. 2

10. Also check areas surrounding repaired locations.

11. Products using cathode ray tubes (CRTs)
    In regard to such products, the cathode ray tubes themselves, the high voltage circuits, and related circuits are specified for compliance with recognized codes pertaining to X-ray emission. Consequently, when servicing these products, replace the cathode ray tubes and other parts with only the specified parts. Under no circumstances attempt to modify these circuits. Unauthorized modification can increase the high voltage value and cause X-ray emission from the cathode ray tube.

12. Crimp type wire connector
    In such cases as when replacing the power transformer in sets where the connections between the power cord and power transformer primary lead wires are performed using crimp type connectors, if replacing the connectors is unavoidable, in order to prevent safety hazards, perform carefully and precisely according to the following steps.

    1) **Connector part number** : E03830-001
    2) **Required tool** : Connector crimping tool of the proper type which will not damage insulated parts.
    3) **Replacement procedure**
       (1) Remove the old connector by cutting the wires at a point close to the connector.
       Important : Do not reuse a connector (discard it).

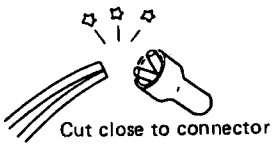


Fig. 3

(2) Strip about 15 mm of the insulation from the ends of the wires. If the wires are stranded, twist the strands to avoid frayed conductors.

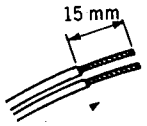


Fig. 4

(3) Align the lengths of the wires to be connected. Insert the wires fully into the connector.

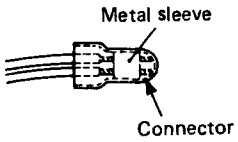


Fig. 5

(4) As shown in Fig. 6, use the crimping tool to crimp the metal sleeve at the center position. Be sure to crimp fully to the complete closure of the tool.

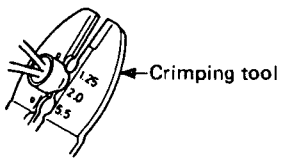


Fig. 6

(5) Check the four points noted in Fig. 7.

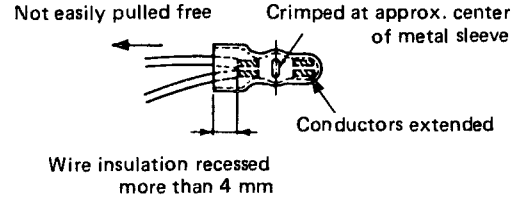


Fig. 7

# ● Safety Check after Servicing

Exemine the aree surrounding the repaired locetion for damage or deterioration. Observe that screws, parts and wires have been returned to original positions, Afterwards, perform the following tests and confirm the specified values in order to verify compliance with safety standards.

1. **Insuletion resistance test**
   Confirm the specified insulation resistance or greater between power cord plug prongs and externally exposed parts of the set (RF terminals, antenna terminals, video and audio input and output terminals, microphone jacks, earphone jacks, etc.). See table 1 below.

2. **Dielectric strength test**
   Confirm specified dielectric strength or greater between power cord plug prongs and exposed accessible parts of the set (RF terminals, antenna terminals, video and audio input and output terminals, microphone jacks, earphone jacks, etc.). See table 1 below.

3. **Clearance distence**
   When replacing primary circuit components, confirm specified clearance distance (d), (d') between soldered terminals, and between terminals and surrounding metallic parts. See table 1 below.

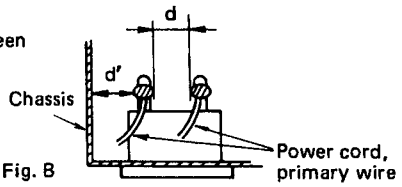

Fig. 8

4. **Leekage current test**
   Confirm specified or lower leakage current between earth ground/power cord plug prongs and externally exposed accessible parts (RF terminals, antenna terminals, video end audio input and output terminals, microphone jacks, earphone jacks, etc.).
   **Maasuring Method:** (Power ON)
   Insert load Z between earth ground/power cord plug prongs and externally exposed accessible parts.
   Use an AC voltmeter to measure ecross both terminals of loed Z. See figure 9 and following table 2.

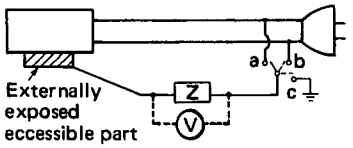

Fig. 9

5. **Grounding (Class I model only)**
   Confirm specified or lower grounding impedance between earth pin in AC inlet and externally exposed accessible parts (Video in, Video out, Audio in, Audio out or Fixing screw etc.).
   **Meesuring Methed:**
   Connect milli ohm meter between earth pin in AC inlet and exposed accessible parts. See figure 10 and grounding specifications.

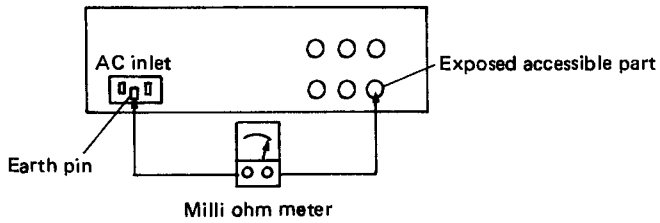

**Fig. 10**

**Grounding Specifications**

| Region | Grounding Impedance (Z) |
|---|---|
| USA & Canada | Z ≦ 0.1 ohm |
| Europe & Australia | Z ≦ 0.5 ohm |

| AC Line Voltage | Region | Insulation Resistance (R) | Dielectric Strength | Clearance Distance (d), (d') |
|---|---|---|---|---|
| 100 V | Japan | R≧1 MΩ/500 V DC | AC 1 kV 1 minute | d, d' ≧ 3 mm |
| 100 to 240 V | | | AC 1.5 kV 1 minute | d, d' ≧ 4 mm |
| 110 to 130 V | USA & Canada | – | AC 900 V 1 minute | d, d' ≧ 3.2 mm |
| 110 to 130 V<br>200 to 240 V | Europe & Australia | R≧10 MΩ /500 V DC | AC 3 kV 1 minute (Class II)<br>AC 1.5 kV 1 minute (Class I) | d ≧ 4 mm<br>d' ≧ 8 mm (Power cord)<br>d' ≧ 6 mm (Primary wire) |

**Table 1** Specifications for each region

| AC Line Voltage | Region | Load Z | Leakage Current (i) | a, b, c |
|---|---|---|---|---|
| 100 V | Japan | 1 kΩ | i ≦ 1 mA rms | Exposed accessible parts |
| 110 to 130 V | USA & Canada | 0.15 μF, 1.5 kΩ | i ≦ 0.5 mA rms | Exposed accessible parts |
| 110 to 130 V<br>220 to 240 V | Europe & Australia | 2 kΩ | i ≦ 0.7 mA peak<br>i ≦ 2 mA dc | Antenne earth terminals |
| | | 50 kΩ | i ≦ 0.7 mA peak<br>i ≦ 2 mA dc | Other terminals |

**Table 2** Leakege current specifications for each region

**Note:** These tables are unofficial and for reference only. Be sure to confirm the precise values for your particular country and locality.

JVC

# VIDEO CASSETTE RECORDER
# VIDEO CASSETTE PLAYER

# BR-D85E
(VIDEO CASSETTE RECORDER)

# BR-D80E
(VIDEO CASSETTE RECORDER)

# BR-D50E
(VIDEO CASSETTE PLAYER)

## INSTRUCTIONS

DIGITAL S

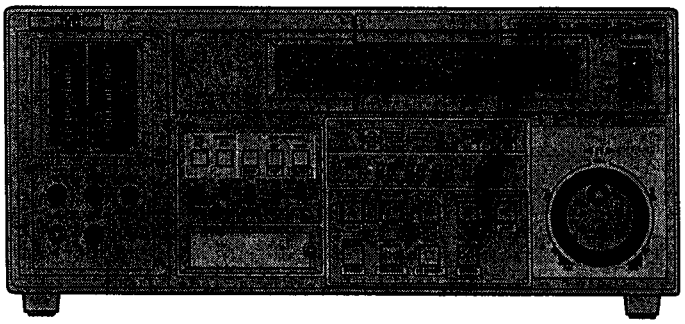

This illustration shows the BR-D85E


INTRODUCTION
CONTROLS, CONNECTORS AND DISPLAY
CONNECTIONS
MENU SWITCH SETTING
MENU SWITCH SETTING DETAILS
PREPARATION
RECORDING
PLAYBACK
EXTRA LINE RECORDING AND PLAYBACK
PRE READ (BR-D85E only)
HOW TO USE TIME CODE
EDITING PHASE ADJUSTMENT
TROUBLE SHOOTING
APPENDIX
SPECIFICA-TIONS


8L96076-002

# SAFETY PRECAUTIONS

**Warning Notice**
**FOR YOUR SAFETY (Australia)**

1. Insert this plug only into effectively earthed three-pin power outlet.
2. If any doubt exists regarding the earthing, consult a qualified electrician.
3. Extension cord, if used, must be three-core correctly wired.

**IMPORTANT (In the United Kingdom)**
**Mains Supply (AC 230 V ~)**
**WARNINO – TNIS APPARATUS MUST BE EARTRED**

The wires in this mains lead are coloured in accordance with the following code;

| | |
|---|---|
| GREEN-and-YELLOW: | EARTH |
| BLUE: | NEUTRAL |
| BROWN: | LIVE |

As the colours of the wires in the mains lead of this apparatus may not correspond with the coloured markings identifying the terminals in your plug, proceed as follows.

The wire which is coloured GREEN-AND-YELLOW must be connected to the terminal in the plug which is marked with the letter E or by the safety earth symbol ⏚ or coloured GREEN or GREEN-AND-YELLOW.

The wire which is coloured **BLUE** must be connected to the terminal which is marked with the letter N or which is coloured BLACK. The wire which is coloured BROWN must be oonnected to the terminal which is marked with the letter L or coloured **RED**.

**POWER SYSTEM**
**Connection to the mains supply**
This unit operates on voltage of 220 to 240 **V** AC, 50/60 Hz.

**WARNINO:**
**TO PREVENT FIRE OR SHOCK HAZARD, DO NOT EXPOSE THIS APPLIANCE TO RAIN OR MOISTURE.**

**CAUTION**
To prevent electric shock, do not open the cabinet. No user serviceable parts inside. Refer servicing to qualified service personnel.

**WARNINO**
This is a Class A product. In a domestic environment this product may cause radio interference in which case the user may be required to take adequate measures.

**Note:**
The rating plate and the safety caution are on the rear of the unit.

**WARNINO**
It should be noted that it may be unlawful to re-record pre-recorded tapes, records, or discs without the consent of the owner of copyright in the sound or video recording, broadcast, or cable programme and in any literary, dramatic, musical or artistic work embodied therein.

Thank you for purchasing the BR-D85E/BR-D80E/ BR-D50E DIGITAL S video cassette recorder/player with electronic editing capabilities.

Tho difforance batween tho BR-D80E and the BR-D85E is that the BR-D80E is not provided with the pre-read function and serial digital interface.
The BR-D50E is a playback-only VCR ( BR-D80E without racording functions).
Any information in this manual that applies to a specific modol only is indicatod in the following manner: <BR-D85E only>. All illustrations in this manual show the BR-D85E.

DIGITAL S

This video cassette recorder uses the DIGITAL S format. It can only be used with video tape cassettes bearing the "DIGITAL S" logo.

- It may be unlawful to use any material recorded from TV broadcast programs or pre-recorded programs without the consent of the owner of copyright, except in cases where this material is recorded exclusively for personal use.

**In tha caee of BR-D58E, BR-D88E and BR-D85E, only 2-channel PCM audio is available. It ia not poaaible to have 4-channel PCM audio for BR-D50E, BR-D80E and BR-D85E.**

# MAIN FEATURES

- Superb picture quality achieved by the DIGITAL S format using 4:2:2 component digital processing.
- 2-channel PCM high-quality sound with 18-bit 48 kHz sampling.
- High-density metal tape based on the W-VHS format.
- Built-in time code generator/reader to enable recording and reading of EBU-Standard time code and user bits.
- Pre-read function (BR-D85E only)
  This newly added function makes it possible to execute A/B roll editing using only one player. (Video insert only)
- Compact size, light weight, and low power consumption make DIGITAL S comparable to analog VCRs in terms of operability.
- Complete analog interface with input/output terminals for composite, Y/C, colour difference component and analog audio signals included as standard.
- Serial digital interface (BR-D85E only)
  A serial digital signal input/output connector is provided as standard. This facilitates configuration of a fully digital system.
  Except for the BR-D85E, the optional SA-D80U or SA-D50U is required.
- Jog/search dial provided on the front panel for direct jog/search capability.
- Built-in noiseless slow playback facility for noiseless playback in the speed range between approximately -0.3 and +0.3.
- Monitor facility for search audio.
  The DIGITAL S format provides two channels of linear track, enabling audio monitoring even during video shuttle search.
- Assemble/insert editing with appropriate editing controller connected for frame-by-frame editing and time code editing.
- Frame-by-frame recording and editing using intra-frame data compression.

# CONTENTS


**1 INTRODUCTION ..... 5**
- 1-1 Outline ..... 5
- 1-2 Precautions ..... 5
- 1-3 For Maintenance ..... 6
- 1-4 Video Cassette ..... 7
- 1-5 Head Cleaning ..... 7

**2 CDNTROLS, CONNECTORS AND DISPLAYS ..... 8**
- 2-1 Front Panel ..... 8
- 2-2 Rear Panel ..... 13
- 2-3 Displays ..... 15

**3 CONNECTIONS ..... 17**
- 3-1 Video Signal ..... 17
- 3-2 Audio Signal ..... 18
- 3-3 Editing ..... 19

**4 MENU SWITCH SETTING ..... 20**
- 4-1 Menu Display Modes ..... 20
- 4-2 Menu Switch Setting ..... 22
- 4-3 Saving and Calling Up Menu Switch Settings ..... 23
- 4-4 Calling Up Functional Menu Switch ..... 24
- 4-5 User Page Registration/Change/Delete . 25
- 4-6 How to Lock the Menu Switch Settings .. 28
- 4-7 Recording Current Adjustment (BR-D85E/BR-D80E only) ..... 29
- 4-8 Hour Meter Data Display ..... 30

**5 MENU SWITCH SETTING DETAILS ..... 31**
- 5-1 Menu Switch List ..... 31
- 5-2 Menu Switch Setting Content ..... 32

**6 PREPARATION ..... 42**
- 6-1 Operation Mode Lock ..... 42
- 6-2 Standby ON/OFF ..... 43
- 6-3 Loading and Unloading the Cassette ..... 44

**7 RECORDINO (BR-D85E/BR-D80E only) ..... 45**
- 7-1 Preparation for Recording ..... 45
- 7-2 Audio Record Level Adjustment ..... 46
- 7-3 Basic Recording Operations ..... 47
- 7-4 Audio Emphasis Function ..... 48

**8 PLAYBACK ..... 49**
- 8-1 Preparation for Playback ..... 49
- 8-2 Basic Playback Operations ..... 50
- 8-3 Manual Tracking Adjustment ..... 51
- 8-4 Error Correction ..... 52
- 8-5 Shuttle Search/Jog Operation ..... 53
- 8-6 FF, REW and Counter Memory Functions ..... 54
- 8-7 Repeat Playback ..... 54

**9 VIDEO EXTRA LINE RECORDING AND PLAYBACK ..... 55**
- 9-1 Extra Line Data Recording (BR-D85E/BR-D80E only) ..... 55
- 9-2 Extra Line Data Playback ..... 56

**10 PRE-READ FUNCTION (BR-D85E only) ..... 57**
- 10-1 Editing with the Pre-read Function ..... 57
- 10-2 Example of Editing System Configuration ..... 58

**11 HOW TO USE TIME CODE ..... 59**
- 11-1 Time Code Display ..... 59
- 11-2 Time Code Initial Setting (Preset) (BR-D85E/BR-D80E only) ..... 60
- 11-3 Time Code Recording (BR-D85E/BR-D80E only) ..... 62
- 11-4 Time Code Playback ..... 64
- 11-5 Sub Time Code Recording and Playback ..... 65
- 11-6 Time Code Switch Setting for Editing ..... 66

**12 EDITING SYSTEM PHASE ADJUSTMENT ..... 67**
- 12-1 Connection ..... 67
- 12-2 Unit-by-Unit Adjustment ..... 68
- 12-3 Phase Adjustment ..... 69

**13 TROUBLESHOOTING ..... 71**
- 13-1 Warnings with Indicators ..... 72
- 13-2 Troubles not to be warned by Indicators ..... 73

**14 APPENDIX ..... 74**
- 14-1 Optional Accessories ..... 74

**15 SPECIFICATIONS ..... 76**

# 1 INTRODUCTION

## 1-1 OUTLINE

This manual consists of the following sections.

**Sectien 1 INTRODUCTION**
Carefully read this section as it describes the precautions to be taken when operating this unit and the type of cassette to be used.

**Section 2 CONTROLS, CONNECTORS AND DISPLAYS**
If you are already familiar with the operation of professional VCRs, you will probably only need to read this section to get started.

**Section 3 CONNECTIONS**
This seotion describes basic connections between the DIGITAL S VCR and other units.

**Section 4 MENU SWITCH SETTING**
This unit incorporates a "Menu" function which allows you to set a variety of switches on screen. Setting procedures and setting items are described in this section.

**Sectien 5 MENU SWITCH SETTING DETAILS**
This seotion describes in detail the menu switch items and setting contents.

**Section 6 PREPARATION**
This section describes how to set up the unit prior to operation and notes any precautions that need to be taken.

**Section 7 RECORDING (BR-D65E, BR-D60E only)**
This section describes recording operations and settings.

**Section 6 PLAYBACK**
This section describes playback operations and settings.

**Section 9 VIDEO EXTRA LINE RECORDING AND PLAYBACK**
This section describes how to record and play back a video signal on an external video line.

**Section 10 PRE-READ FUNCTION (BR-D65E only)**
This section describes the pre-read function and provides an example of how an editing system using this function might be set up.

**Section 11 HOW TO USE TIME CODE**
This section describes time code presetting, recording, and time code playback operation.

**Section 12 EDITING PHASE ADJUSTMENT**
This section describes how to adjust the internal TBC phases.

**Section 13 TROUBLESHOOTING**
This section suggests ways to handle potential difficulties or malfunctions.

**Section 14 APPENDIX**
This section includes descriptions of optional units.

**Section 15 SPECIFICATIONS**

## 1-2 PRECAUTIONS

The DIGITAL S VCR incorporates highly sophisticated and complex technology. To ensure proper operation, be sure to take the following precautions.

### Installation and storage

- Avoid using the unit in places subject to the following conditions:
  - extreme heat or cold
  - strong magnetic field
  - high humidity
  - dust and soil
  - vibrations
- Handle the unit carefully
  Do not block the ventilation openings, or place anything heavy on the unit. Do not put any foreign substance into the cassette loading slot.
- Use this unit in horizontal (flat position) only.
- Avoid violent shocks to the recording chassis during transportation. Remove the cassette tape from the unit for transportation.
- Avoid keeping tapes in Still or Record Pause mode for a long time as doing so may damage the tape.

### Cleaning

- When cleaning the cabinet, wipe it with soft cloth. Do not use benzene or thinner as these may deform or discolor the cabinet surface. To remove excessive dirt, clean the unit with a mild detergent diluted with water, then wipe it with dry cloth.

## 1-2 PRECAUTIONS

### Condensation

- Do not use this unit immediately after moving it from a cold place to a warm place. This will cause water vapor to condense on the still cold video head drum and tape guides and may damage the tape and the VCR.
- When condensation occurs, the warning message "02 1" is shown on the tape counter display. The cassette is automatically ejected. (See page 71) The head drum then rotates automatically to dry itself. Leave the VCR in this state with the power on. Once the warning message "02 1" has turned off, operation can be resumed.

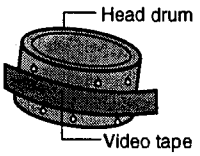


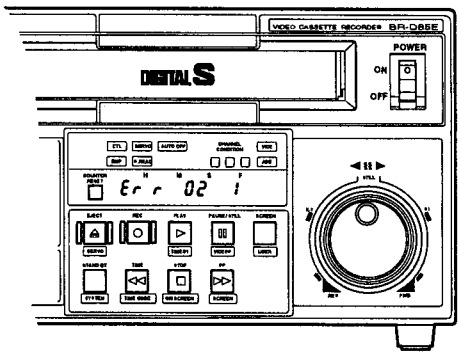


## 1-3 FOR MAINTENANCE

The video cassette recorder/player is constructed with precision mechanism elements. Regular maintenance is required to maintain the performance level necessary for professional use. Continued use of this unit without maintenance may lead to malfunctions and damage to video cassette. Carry out regular maintenance as desoribed below.

- **Tracking operation (running) tima**
  The total operation time reached by an ordinary home VCR in 5 to 6 years may be reached by a professional VCR in as few as 5 to 6 months. Therefore, it is important to closely monitor the total hours of operation time. You can check the running time on the provided hour meter (drum running time). The hour meter is shown on the counter display or on-screen display on the monitor.
- **Hour meter indication**
  The hour meter can be displayed by selecting "DRUM HOUR" on the menu switch setting screen. For details, refer to "Hour meter indication " on page 30.
- **Maintenance schedule**
  Depending on the operation time, inspect or replace the following mechanism elements.
  Replace the drum assembly (including the heads) and head cleaner every 750 hours.

  ☆: Check or replace as required. If replacement is not required, clean it.
  ○: Cleaning, check and adjustment
  ●: Replace

| Use time | Every 750 hours | 1500H | 3000H | 4500H | 6000H |
|---|---|---|---|---|---|
| Drum assembling (including heads) | ● | ● | ● | ● | ● |
| Head cleaner | ● | ● | ● | ● | ● |
| Tape guide roller,etc. | ○ | ● | ● | ● | ● |
| Fixed head | ☆ | ○ | ● | ○ | ● |
| Belt pinch roller,etc. | ○ | ● | ● | ● | ● |
| Driving system parts | ☆ | ○ | ○ | ○ | ● |

This table should be used as reference only. Actual maintenance requirements will vary according to how the unit is used.

### Maintenance consultation

Consult your local JVC dealer for more information about maintenance scheduling and costs.

## 1-4 VIDEO CASSETTE

- Only cassettes bearing the "DIGITAL S" logo can be used with this VCR. Recording and playback time for usable cassettes are shown below.

| Cassette | Recording/playback time |
|---|---|
| DS-104 | Approx. 104 min. |
| DS-64 | Approx. 64 min |
| DS-34 | Approx. 34min. |

- Cassettes bearing the S-VHS or VHS logo cannot be used with this unit. If an S-VHS or VHS cassette is inserted, it will be automatically ejected.
- Video cassettes cannot be used upside dewn.
- Leaving the tape in a partially wound condition for a long time may damage the tape. Rewind the tape to the beginning before storage.
- Tape performance cannot be maintained if a cassette is re-used 100 times or more. The more a tape is used, the more dropouts occur resulting in increased picture noise. Do not use tapes which have been frequently used or are damaged as doing so damage the rotary heads and shorten the service life of the VCR.

- Cassettes bearing the "DIGITAL S" logo on the back are provided with a safety slide to prevent accidental erasure.
- Move the slide to (△) to prevent erasure.
- Move the slide to (▽) REC to allow recording.

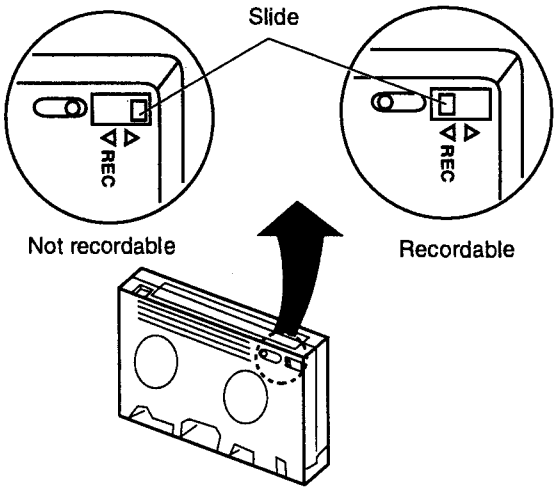


## 1-5 HEAD CLEANING

Repeated recording and playback leads to accumulation of dust and other particles on the video and audio heads. Excessive accumulation will adversely affect the picture or sound quality. Be sure to clean the tape transport system with a dedicated head cleaning tape. (optionally available DCL-5AU)
Use only a dedicated head cleaning tape. For details on use of the dedicated head cleaning tape, refer to the instructions provided it.

# 2 CONTROLS, CONNECTORS AND DISPLAYS

## 2-1 FRONT PANEL

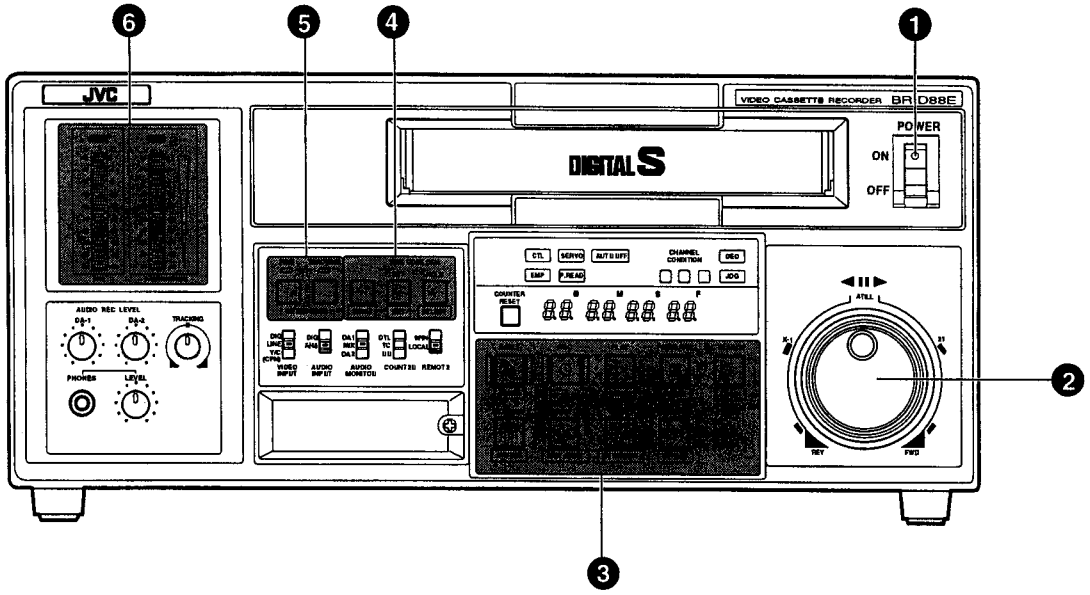


**❶ [POWER] switch**
When power is ON, the counter display is illuminated.

**❶ Search/jog dials**
Turn for search/jog operation.
- The outer dial serves as a search control.
- The inner dial serves as a jog control.

The jog dial is also used for selection of menu setting items and data setting in time code preset.

**❶ Oparation buttons**

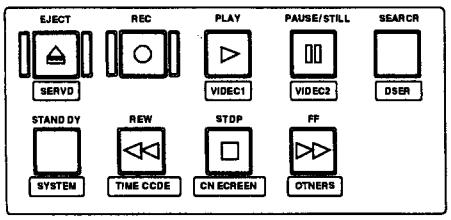


- All buttons are illuminated when pressed.
- The labels printed under the operation buttons indicate the menu items displayed when the button is pressed in the Menu Setting (Direct Access) mode.

**[EJECT] button**
- Press to eject the cassette.
- SERVO menu switch items are displayed when this button is pressed in the Menu Setting (Direct Access) mode.

**[REC] button (BR-O85E, BR-D80E only)**
- Starts recording when pressed with the [PLAY] button.
- To monitor the EE picture during playback, press and hold this button.
- To output EE signals in the Stop mode, press this button. Press the STOP button to cancel this (with menu switch No. 355 "PB/EE SEL STANDBY" set to "PB").

**[PLAY] button**
- Press to start playback. If pressed together with the [REC] button, recording will start.
- VIDEO menu switch items are displayed when this button is pressed in the Menu Setting (Direct access)mode.

**[PAUSE/STILL] button**
- Engages the Pause mode when pressed during recording. Press the [PLAY] button to resume recording.
- Engages the Still mode when pressed in the Play, Search or Stop (Standby On/Off) modes. Press the [PLAY] button to resume playback.
- TBC/FRAME MEMORY menu switch items are displayed when this button is pressed in the Menu Setting (Direct access) mode.

**[SEARCH] button**
- Starts search at the search speed set by the Search dial.
- Menu switch items registered in the User Menu are displayed when this button is pressed in the Menu Setting (Direct access) mode.
- During time code presetting, preset data can be changed by turning the Jog dial while keeping this button pressed.

## 2-1 FRONT PANEL

**[STANDBY] button**
- Switches the Standby mode between ON and OFF in the Stop mode. The button is illuminated in the Standby On mode.
- The head drum continues to rotate when the Standby mode is on. This enables the unit to rapidly switch modes when another function is engaged.
- The head drum does not rotate when the Standby mode is off. This protects the cassette tape and heads from damage.
- SYSTEM menu switch items are displayed when this button is pressed in the Menu Setting (Direct access) mode.

**[STOP] button**
- Press this button to stop any operation. The Output mode in this state can be selected with menu switch No. 355 "PB/EE SEL STANDBY".
- ON-SCREEN menu switch items are displayed when this button is pressed in the Menu Setting (Direct access) mode.

**[REW] button**
- Press this button to rewind the tape. The Output mode during rewind can be selected with menu switch No. 356 "PB/EE SEL FF/REW".
- TIME CODE menu switch items are displayed when this button is pressed in the Menu Setting (Direct access) mode.

**[FF] button**
- Press this button to fast-forward the tape. The Output mode during fast-forward state can be selected with menu switch No. 356 "PB/EE SEL FF/REW".
- The drum hour meter is displayed when this button is pressed in the Menu Setting (Direct access) mode.

**❹ Time code generator/menu switch setting buttons**
- These buttons are used to set both the time code generator and the menu switches. The labels above the buttons indicate the time code-related functions while those beneath the buttons indicate menu switch functions.

* For the BR-D50E, only the menu setting function is available.

**■ Time code generator setting (BR-D85E/BR-D88E only)**

**[HOLB] button**
- Press this button to preset data in the time code generator. Time code is preset with the COUNTER switch set at TC and user bits with the COUNTER switch at UB.

* This button is effective only when the INT/EXT switch on the time code setting section is set to INT and the PRESET/REGEN switch to PRESET.

**[SET] button**
- Press this button after presetting data in the time code generator. Presetting is complete and the counter displays the counter data being read.

**■ Menu switch setting**

**[MENU] button**
- Press this button to enter the Menu Switch Setting mode.
  Press this button again to switch the Menu Switch Setting mode back to the Counter Display mode.

**[SET] button**
- Press this button to store menu switch setting data in the VCR's memory.

**[SELECT] button**
- Press this button to select the menu switch setting data.

**❺ Meter mode select buttons**

Use to select meter display items and display accuracy.

**[TRACKINO METER MODE] button**
- Press this button to switch between DA-2 audio level meter and tracking meter.
  Tracking meter is displayed when the TRACKING indicator is illuminated.

**[FINE METER MODE] button (BR-D85E/BR-D80E only)**
- Press this button to change the display accuracy of the DA-1/DA-2 audio level meter.

When FINE indicator is illuminated, the meter display is in Fine mode. More precise level adjustment is possible in this mode.

**❻ Level meter section**

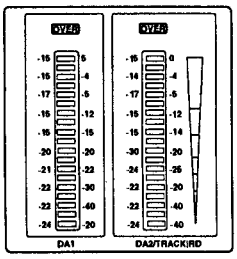


- Indicates the audio recording or playback levels. The DA2/TRACKING meter can be switched between tracking display and DA2 audio level display with the TRACKING METER MODE button.
  Audio Level Display mode can be selected with the FINE METER MODE button (for BR-D85E/BR-D80E only).
  If the audio level is too high, the OVER mark is illuminated.

## 2-1 FRONT PANEL

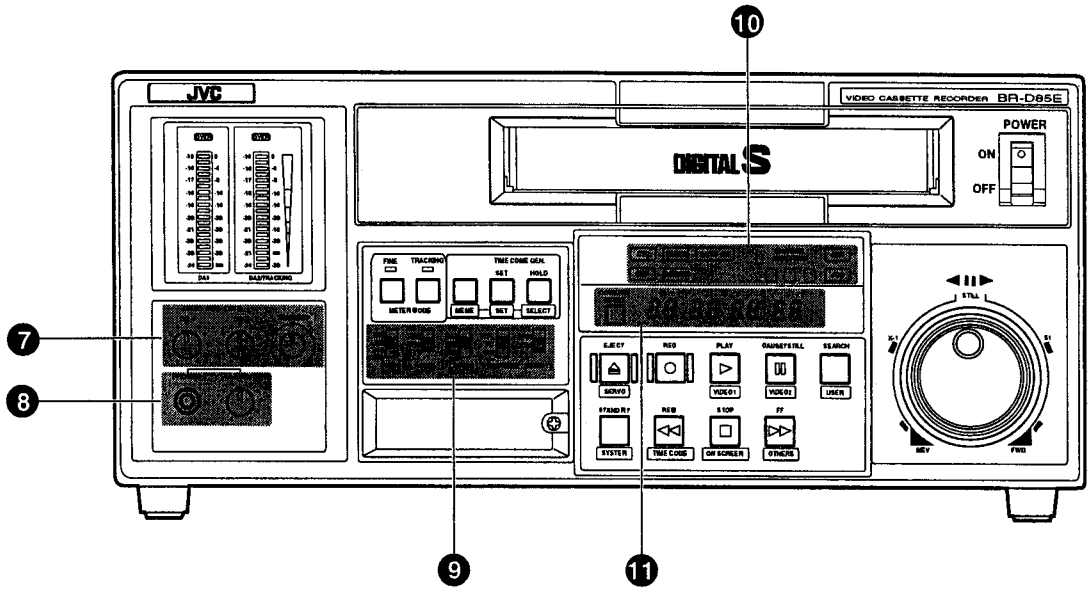


**❼ Analog audio recording level/tracking adjust knob**

**[AUDIO REC LEVEL] adjust knob (BR-D85E/BR-D80E only)**

- Adjusts analog audio recording levels for each of DA1/DA2 channels. Turn the knob clockwise to raise the level and counterclockwise to lower it.

**[TRACKING] adjust knob**

- Manually adjusts tracking during playback. After setting the DA2/TRACKING meter set to Tracking Display mode with the TRACKING/ METER MODE button, adjust this knob until the needle swings to the maximum level.

* To manually adjust tracking, set menu switch No. 005 AUTO TRACKING to OFF (0).

**❽ Headphone section**

**[PHONES] jack**

- Connect a set of headphones with a 6 mm-dia. plug to listen to the audio channel selected with the AUDIO MONITOR switch.

**[LEVEL]control**

- Adjusts signal level output from the PHONES jack.

**❾ Setting switch section**

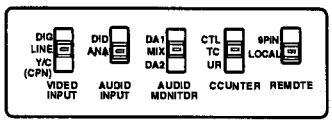


**[REMOTE] select switch**

To select between remote and local control of the VCR.

9 PIN: For remote control with the remote control unit connected to the rear panel 9-pin connector.
With this position selected, all VCR buttons other than STOP and EJECT are disabled.

LOCAL: For direct control with the front panel control buttons.
With this position selected, remote control is disabled.

**[COUNTER] select switch**

To select the Counter Display mode.

CTL: CTL (control) signals are displayed on the time counter.

TC: Time code signals are displayed on the time countor.

UB: User bits are displayed on the time counter.

* On the remote control unit, CTL display can be selected by setting the Counter Read mode to CTL. TC display can be selected by setting it to TC.

## 2-1 FRONT PANEL

**[AUDIO MONITOR] select switch**
To seleot the audio output for the AUDIO MONITOR OUT connector and the PHONES jack.

DA1: To monitor the DA1 channel signals.
MIX: To monitor the DA1 and DA2 signals tegether, in stereo for headphone monitoring.
DA2: To monitor the DA2 channel signals.

**[AUDIO INPUT] select switch**
To seleot an audio signal for recording.

DIG: For serial digital audio input
ANA: For analog audio input through the [AUDIO IN] connector.

**[VIDEG INPUT] select switch**
To select a video signal for recording.
DIG: For the serial digital video signal.
LINE: For the composite video signal through the [VIDEO LINE IN] connector.
Y/C (CPN): For the Y/C443 signal through the [VIDEO Y/C443 IN] or the component video signal through the [Y, R-Y, B-Y IN] oonnector.

* Seleot Y/C443 or component with menu switch No. 109 VIDEO INPUT.

**⑩ LED indicator section**

CTL **[CTL] control indicator**
- Lights during playback of a tape with no recorded control signals. The SERVO indicator goes out at the same time.

SERVO **[SERVO] lock indicator**
- Lights when the capstan and drum servos are locked to the reference signal during recording or playback.

AUTO OFF **[AUTO OFF] indicator**
- Lights when the unit malfunctions .

GEN **[GEN] genlock indicator**
- Lights when the unit is locked to the signal delivered to the rear panel [REF IN] connector.

EMP **[EMP] emphasis indicator**
- Lights when emphasis information is oontained in playback digital audio signals.
- Lights when emphasis information is oontained in input digital audio signals .

P.READ **[P.READ] pre-read indicator (DR-D85E only)**
- This indicator lights when menu switch No. 351 PRE READ is set to ON (1) or a pre-read command is received from the 9-pin remote connector. The pre-read function is operative and the pre-read picture is output from the video output connector. For more details, refer to page 57.

JOG **[JOG] jog mode indicator**
- Lights in the Jog mode.

**[CHANNEL CONDITION] indicator**
- These indicators shcw the output level (Error-rate) of the video heads in the Play mode.

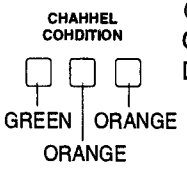


Green : Normal
Orange : Minor errors.
Double orange : Major errors. Normal playback is not possible.

* If one or two orange indicators light continuously, adjust the tracking manually or clean the heads with a dedicated head cleaning tape. If three indicators blink at the same time, tracking adjustment is required. Adjust the traoking manually or by setting menu switch No. 005 "AUTO TRACKING" to ON.

**⑪ Counter display section**

**[COUNTER RESET] button**
- Press this button to reset the CTL counter to 0:00:00:00.

* Time codes and user bits cannot be reset.

**Counter display**
- Usually displays tape time. With the MENU button pressed, it displays menu switch setting and hour meter . Displays warning codes in the AUTO OFF state.

## 2-1 FRONT PANEL

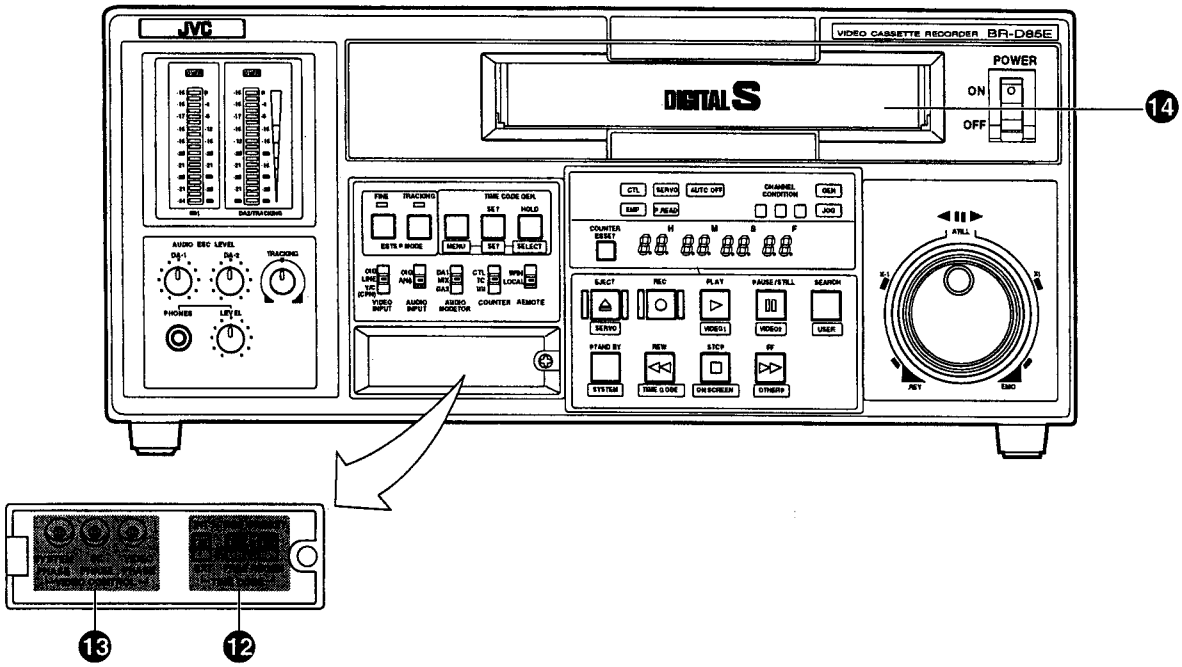


**⑫ Time code setting switch section (BR-B85E/BR-D80E only)**

Remove the front cover to perform setting.

**[INT/EXT] time code select switch**

- To select internal or external time code generation.

INT: To use the internal time code generator.

EXT: To use an external time code generator. This setting automatically engages the Free Run mode and the Regeneration mode.

**[REC/FREE] Run mode select switch**

- To select one of two Run modes available with the internal time code generator.

* Effeotive only when the PRESET/REGEN switch is set to PRESET and the INT/EXT switch to INT.

REC: Time code runs only during recording.

FREE: Time code runs in real time regardless of the VCR's operating mode. Select this position for editing.

**[PRESET/REGEN] select switch**

- To select the Internal Time Code Generator mode.

* Effectivo only when the INT/EXT switch to INT.

PRESET: Select this mode to preset time code data.

REGEN: Select this mode when using the internal time code generator in sync with playback time code signal.

**⑫ Video control section**

Use these controls for editing with two or more players (such as A/B roll editing).

The phases of different video signals can be adjusted with these controls.

* Remove the front cover and adjust using a straight-slot screwdriver.

**[SYSTEM PHASE] control**

- Provides phase matching between the external sync signal and the video output signal.

**[SC PHASE] control**

- Provides subcarrier phase matching between the video output signal and the external sync signal.

**[VIDEO PHASE] control**

- Adjusts the video phase of the video output signal .

* Set menu switch No. 110 VIDEO PHASE to VARIABLE (1) for this adjustment.

**⑭ Cassette loading slot**

* S-VHS/VHS tape cannot be used for either recording or playback.

## 2-2 REAR PANEL

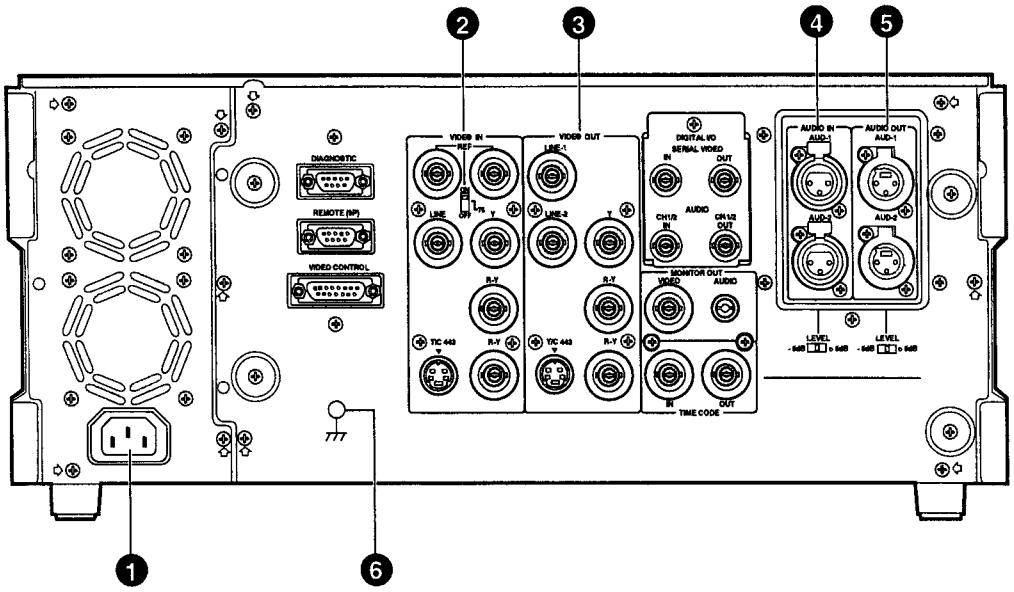


**❶ [AC IN] socket**
Connect to an AC power outlet via the provided power cable. Connect to a 220 V – 240 V AC, 50/60 Hz power outlet.

**❶ Video input connector section**

**Video signals input to this unit should be passed through a TBC for optimum stability and minimum jitter.**

■ **[REF IN] external sync signal input connector/75-ohm terminating switch (loop-through) BNC**
- Receives the external reference sync signal. Because of its loop-through design, this connector can distribute signals to other units through the other terminal. Set the terminating switch to OFF when distributing signals. If signal distribution is not desired or is terminated at this unit, set the switch to ON.
- Do not use input signals with a level exceeding 1Vp-p (75 ohms terminated).
  * When setting up an A/B roll editing system, be sure to input a black burst or standard colour signal to ensure that the [GEN] indicator is lit.

■ **[LINE IN] connector....BNC (BR-D85E/BR-D80E only)**
- Receives the composite video signal.

■ **[Y/C 443 IN] input connector....4 pin (BR-D85E/BR-D30E only)**
- Receives the separate YC signal.
  * When recording a separate YC signal, set menu switch No. 109 VIDEO INPUT to Y/C (0).

■ **[Y.R-Y.B-Y IN] input connector BNC x 3 (BR-D85E/BR-D80E only)**
- Receives the component signal.
  * When recording a component signal, set the menu switch No. 109 VIDEO INPUT to CPN (1).

**❶ Video output connector section**

■ **[LINE OUT] connector....BNC x 2**
e Outputs the composite video signal. The same signal is delivered through the [LINE-1] [LINE-2] connectors.

■ **[Y/C 443 OUT] connector....4 pin**
e Outputs the separate YC signal.

■ **[Y.R-Y.B-Y. OUT] connector....BNC x 3**
e Outputs the component signal.

**❶ Audio input connector section (BR-D85E/BR-D80E only)**

■ **[AUDIO IN] connector XLR x 2**
- Receives the analog audio signal.

■ **[LEVEL] audio input level select switch**
- To select -6dB or +4dB according to the level of the audio input signal.

**❶ Audio output connector section**

■ **[AUDIO OUT] connector XLR x 2**
- Outputs the analog audio signal.

■ **[LEVEL] select switch**
- To select -6dB or +4dB according to the input level of connected audio equipment.

**❶ Earth terminal**
For signals.

## 2-2 REAR PANEL

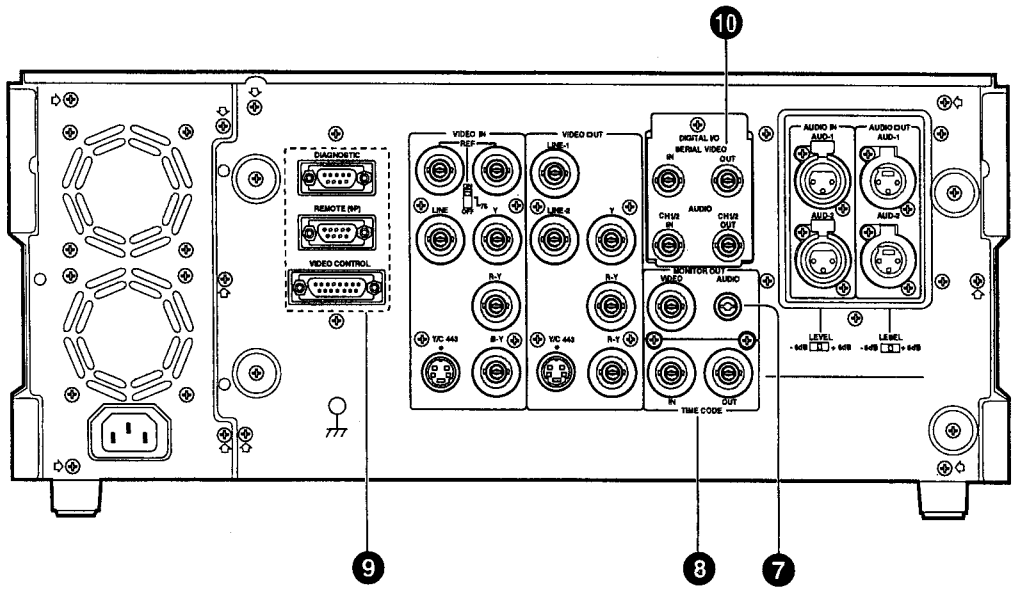


**⑦ Monitor output connector section**

■ **[VIDEG MONITOR OUT] connector BNC**

- Outputs the composite video signal. Time counter data and menu switch data can be shown on the soreen of a monitor connected to this connector.

* On-screen display signals are delivered to this connector only.

■ **[AUDIO MONITOR OUT] connector RCA**

- Outputs the monaural audio signal seleoted with the front panel AUDIO MONITOR switch.

**⑧ Time code connector section**

■ **[TIME CODE IN] connector BNC (BR-D85E/ BR-D88E only)**

- Receives the external time code signal. LTC time code conforming to the EBU standard can be received.
- LTC time oode signals with a high level of jitter cannot be used. Be sure to use regenerated signals (stable signals which phase match video signals).

■ **[TIME CODE OUT] connector BNC**

- Outputs a time code signal to the external time code generator. LTC time code conforming to the EBU standard can be output.
- LTC time code is not output during Searoh unless menu switch No. 452 "SEARCH LTC" is set to "ON (1)".

**⑨ Control connector section.**

■ **[DIAGNOSTIC] connector D-SUB 9 pin**

- Used to diagnose malfunctions and for other service procedures.

■ **[REMOTE] connector D-SUB 9 pin**

- Ccnnect to a remote editing control unit compatible with the RS-422 serial interfaoe.

■ **[VIDEO CONTROL] connector D-SUB 15 pin**

- Used to adjust the built-in TBC. Connect to the optional RM-G22JX TBC remote controller.

**⑩ [DIGITAL I/O] digital signal connector section (BR-D85E only)**

When using the BR-D80E or BR-D50E, you must install the optional digital interface board in order to input/output serial digital signals.
SA-D80U: Serial digital signal input/output.
SA-D50U: Serial digital signal output only.

■ **[SERIAL VIDEO] connector for serial video signals ..... BNC x 2**

- Inputs/outputs serial video signals conforming to SMPTE 259M.

**[IN]**

- Serial digital video signals are input.

**[OUT]**

- Serial digital video signals are output.

■ **[AUDIO] connector for digital audio signals ..... BNC x 2**

- Inputs/outputs digital audio signals oonforming to the digital audio interface standard (AES/EBU).

**[IN CH1/2]**

- Digital audio signals are input.Consumer digital audio signals cannot be recorded.

**[OUT CH1/2]**

- Digital audio signals are output.

When the serial digital inputs and outputs of several VCRs are connected in series, do not input the same signal to each VCR for recording as they may not be input correctly. Digital audio signals, in particular, will not be input correctly to the next VCR in the series.

## 2-3 DISPLAYS

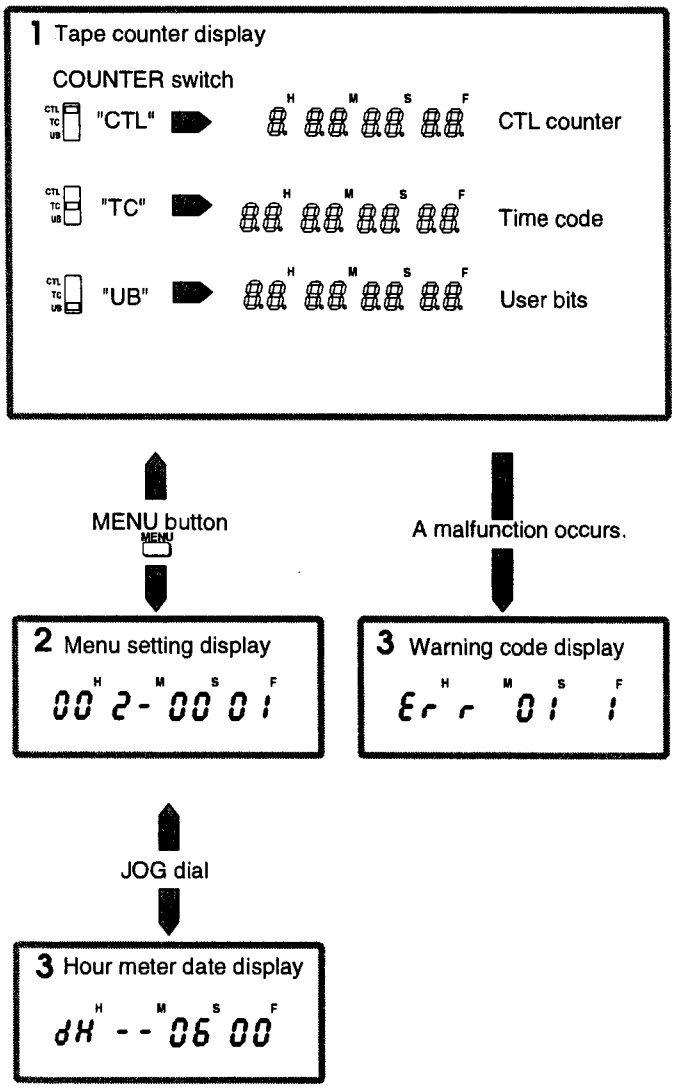


### Counter Display

The counter display is switchable between the following four modes (see figures to the left).

**1. Tape counter display**

The display usually serves as a tape time counter (hours, minutes, seconds, frames). CTL counter, time code or user bits can be selected with the front panel COUNTER switch.
The Menu Setting Display mode is entered when the MENU button is pressed.

**2. Monu aetting display**

To select menu functions and perform menu switch setting
Menu functions and menu switch items can be changed with the JOG dial. (See page 22) "Menu Switch Setting" for details.

- Tho counter display shows symbols and numerals. The on-screen display shows messages in characters.

Pressing the MENU button restores the Tape Counter Display mode.

**3. Hour meter data display**

The hour meter data (drum operation time) can be displayed in the Menu Setting Display mode.
(For detail,see page30.)

**4. Warning code display**

If a malfunction occurs, the corresponding warning code is automatically displayed.
(For detail,see page 71.)

**How to reset the CTL counter**

- Pressing the COUNTER/RESET button resets the CTL counter to 0:00:00:00. Time codes and user bits cannot be reset.
- Ejecting the cassette tape also resets the CTL counter to 0:00:00:00.

## 2-3 DISPLAYS

### 1. Tape counter display

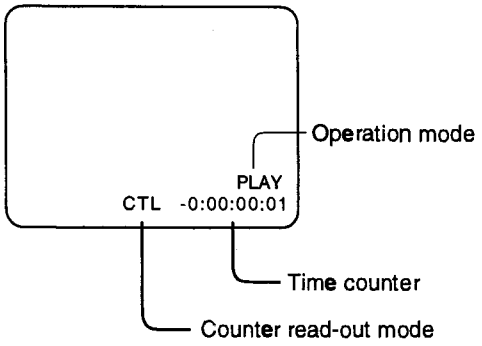


Counter mode

CTL : CTL data
TCR : Time code reader data
TCG : Time code generator data
UBR : User bits reader data
UBG : User bits generator data

TCR • : CTL interpolation mode

With menu switch No. 451 VITC OUT SELECT to SUB TC(0), sub timecode information is simultaneously displayed on a separate line.

SUB TC : SUB TC reader data

Operation mode
When the Variable mode is engaged via the editing remote controller;
!VAR: Shown when tape speed exceeds ±1/3 times the normal speed. The picture will be distorted.

### 2. Menu setting display

002:OPERATION LOCK OFF
005:AUTO TRACKING ON

### 3. Heur meter data display

DH:DRUM HOUR METER 0002

### 4. Warning ccde display

WARNING 02 1
CCNDENSATION ON DRUM

### On-screen Display

On-screen information is available only via the rear panel VIDEO MONITOR OUT connector. Messages shown on the on-screen display correspond to the Counter Display items on page 15. (See the lefthand charts.)

**1. Tape counter display**

- e Shows data when menu switch No. 500 ON-SCREEN DISPLAY is set to ON (1).
- e You can choose what information is shown with menu switch No. 504 INFORMATION SELECT.
  Only time data are displayed when TIME (0) is selected.
  Both time data and the VCR operation mode are displayed when TIME + MODE (1) is selected.
- • The display position can be shifted horizontally with menu switch No. 501 CHARA H POSITION and vertically with No. 502 CHARA V POSITION.
- • Set menu switch No. 500 ON-SCREEN DISPLAY to OFF (0) to erase the on-screen display.

**Note:**
The time code data shown on the screen may not coincide exactly with the address data recorded on the tape (there is usually a slight delay). **To avoid prohlems in off-line editing, do not copy or use on-screen data from the MONITOR OUT connector when preparing a work tape.**

**2. Menu setting display**

Press the MENU button to call up the menu setting display on screen. Multiple items are displayed in the Character mode.

- • Select a menu item by turning the JOG dial.
- • Pressing the MENU button restores the (1) Tape counter display.

See page 22 for menu switch setting procedure.

**3. Hour meter data display**

Hour meter data can be displayed in the Menu Setting Display mode.
(For detail,see page 30.)

**4. Warning code display**

If a malfunction occurs, the corresponding warning code is automatically displayed.
(For detail,see page 71.)

# 3 CONNECTIONS

## 3-1 VIDEO SIGNAL

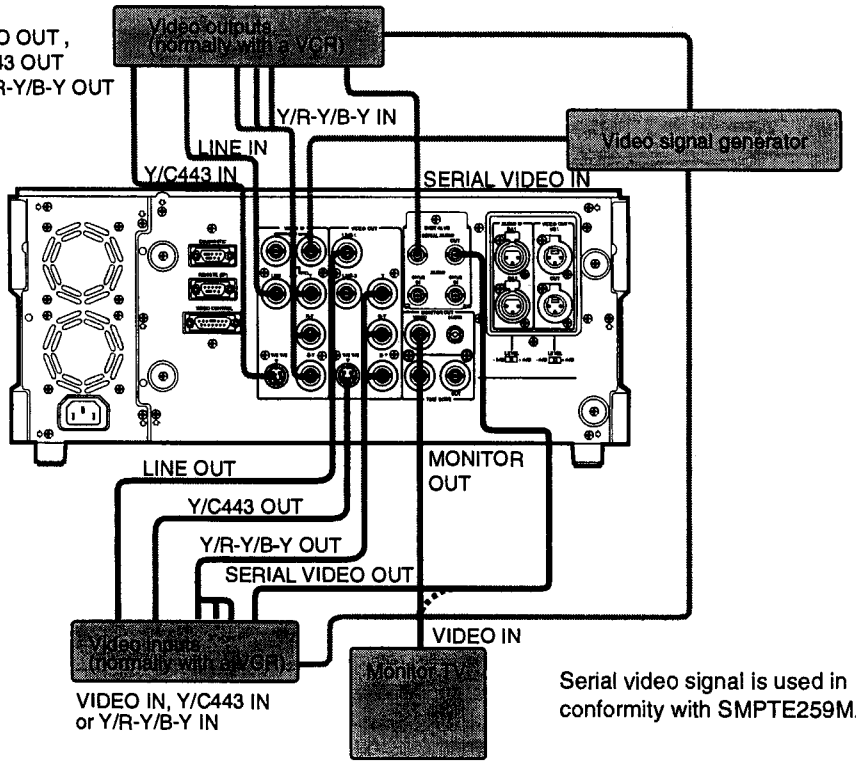


The illustration shows the BR-D85E.

- The BR-D80E/BR-D50E is not provided with a digital input/output connectcr.
- The BR-D50E is not provided with VIDEO IN-LINE, VIDEO IN Y/C443 and Y.R-Y.B-Y IN connectors.

Serial video signal is used in conformity with SMPTE259M.

### Connection to a monitor and video equipment

Because menu switch setting items and on-screen information described in the following section of this manual can only be output from the VIDEO MONITOR OUT connector, you should be sure to connect a monitor to this connector.

- Tc record a signal through the Y/R-Y/B-Y IN component input connector, set menu switch No. 109 VIDEO INPUT to CPN (1).
- To record signal through the VIDEO IN-Y/C443 separate YC input connector, set menu switch No. 109 VIDEO INPUT to Y/C.
- The same signal is delivered from both video output connectors LINE1 and LINE2.

### Optional connection cablea

The following cables are optionally available for Y/C 443 video signal connection.

| Model | Connectors on connected units Output | Input | length |
|---|---|---|---|
| VC-G30U | 4-pin | 4-pin | 3 m |
| VC-G50U | 4-pin | 4-pin | 5 m |
| VC-G3030U | 4-pin | 7-pin | 3 m |
| VC-G2030U | 7-pin | 4-pin | 3 m |
| VC-G2050U | 7-pin | 4-pin | 5 m |

### Connector configurationa

Input connectors

| | |
|---|---|
| VIDEO IN-LINE | BNC |
| VIDEO IN-Y/C443 | 4-pin S connector |
| Y.R-Y.B-Y IN | BNC |
| REF IN | BNC |

Output connectors

| | |
|---|---|
| VIDEO OUT-LINE | BNC |
| VIDEO OUT-Y/C443 | 4-pin S connector |
| Y.R-Y.B-Y OUT | BNC |
| REF OUT | BNC |
| VIDEO MONITOR OUT | BNC |

## 3-2 AUDIO SIGNAL

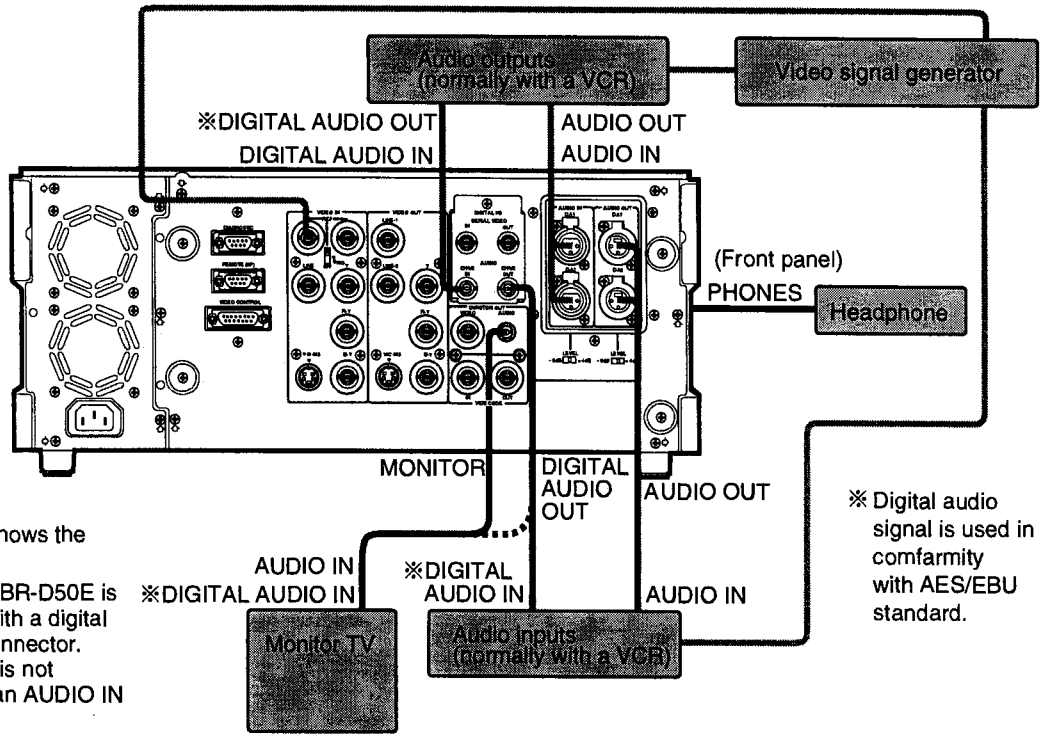


The illustration shows the BR-D85E.

- The BR-D80E/BR-D50E is not provided with a digital input/output connector.
- The BR-D50E is not provided with an AUDIO IN connector.

※ Digital audio signal is used in comfarmity with AES/EBU standard.

### Connection to a monitor and audio equipment

The audio signal output from the AUDIO MONITOR OUT connector is monaural. Select the signal to be output with the front panel AUDIO MONITOR switch.

- Supply an analog signal before A/D conversion to the AUDIO IN connector.
- A D/A converted analog signal is output from the AUDIO OUT oonnector.
- Set the audio input and output level with the LEVEL switch.
- To synchronize audio and video signals when recording digital audio signals, input video signals to the digital audio equipment as well.
- Consumer digital audio signals cannot be recorded.

When the serial digital inputs and outputs of several VCRs are connected in series, do not input the same signal to each VCR for recording as they may not be input correctly. Digital audio signals, in particular, will not be input correctly to the next VCR in the series.

### Connector configurations

**Front panel**

PHONES 6 mm dia. jack (stereo)

**Rear panel**

Input connector

AUDIO IN XLR (3p female)

Output connectors

AUDIO OUT XLR (3P male)

AUDIO MONITOR OUT RCA

### Changing the digital audio output level (BR-D85E only)

For the BR-D80E or BR-D50E, read the following description when installing the optional digital interface board. To allow conversion of digital audio signals into balanced signals for output, you can change the output level. To change the output level, follow the procedure below.

Procedure

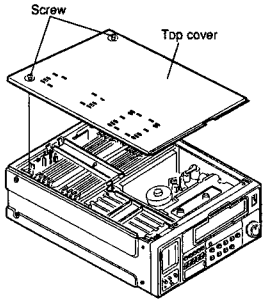


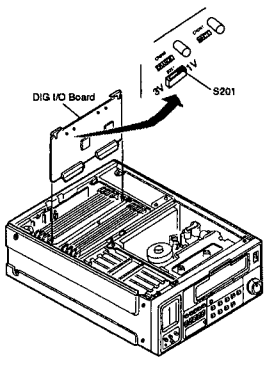


1. Turn off the VCR's power.
2. Loosen the two screws shown in the figure at left and remove the top cover.

Six lugs are installed in the chassis in areas in contact with the top cover. When removing the top cover, be careful not to remove these lugs as well.

3. With a screwdriver or similar tool, change the position of switch S201 on the DIG I/O board.
   1V: Set to this position to output unbalanced signals. (Factory setting)
   3V: Set to this position when connecting an adapter which converts digital audio signals to balanced signals.
4. Replace the top cover and secure it with the screws.

## 3-3 EDITING

Connection example for cut editing.

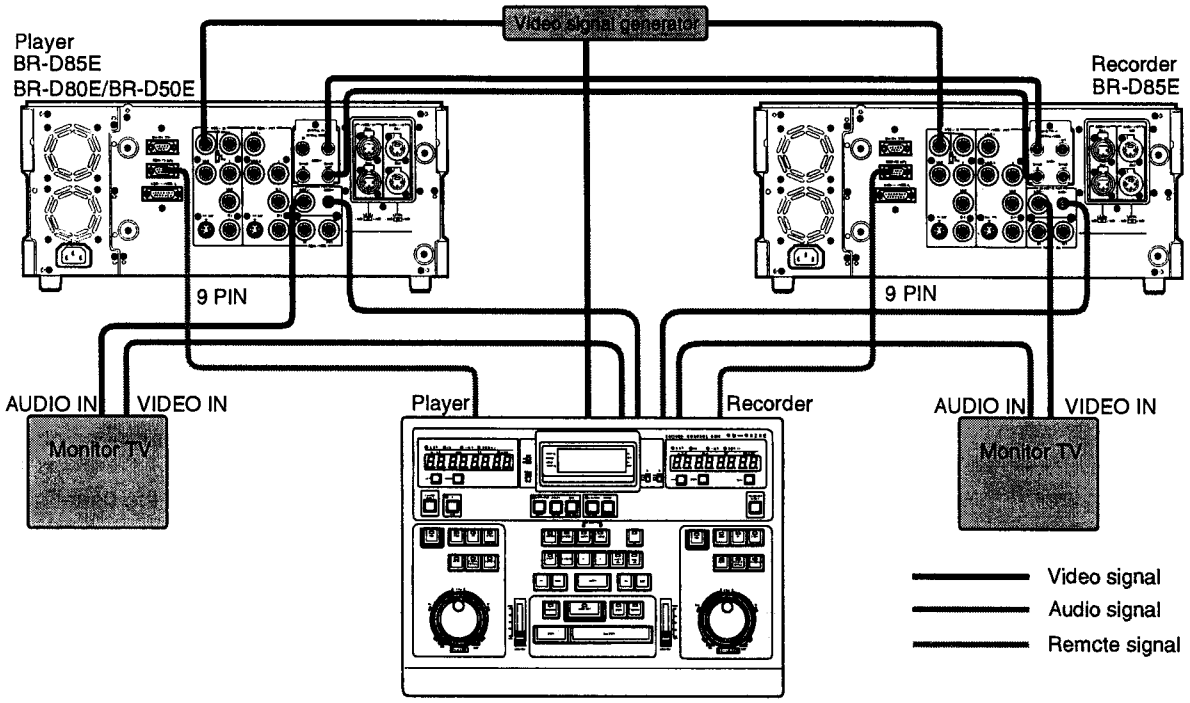


Editing controller RM-G820E

**Reference sync signal**

The servo system automatically selects either an input video signal, external sync signal (REF IN) or internal sync signal (sync signal generated in the VCR) depending on operating status (see below).

1. During playback, the VCR synchronizes with the external sync signal. If no external sync signal is input, it synchronizes with the internal sync signal. It does not synchronize with the input video signal.
2. When the editing mode is selected (recorder) and the Record mode is engaged, the VCR synohronizes with the input video signal. If no video signal is input, the VCR synchronizes with the external sync signal. If no external sync signal is input, the VCR synchronizes with tho internal sync signal.

| Operation | Input sync signal | | Internal sync |
|---|---|---|---|
| | Video input | REF IN | |
| PLAY | X | 1 | 3 |
| REC | 1 | 2 | 3 |
| EDIT | 1 | 2 | 3 |

1: The VCR synchronizes with this signal if available.
2: If 1 is not available, the VCR synchronizes with this signal when available. 1 has priority.
3: The VCR synchronizes with this signal if no externally input signals are available.
X: The VCR does not synchronize.

- Use a composite signal (black burst or standard colour signal) as an external sync signal.
- Because of the loop-through design of the REF IN connector, the signal can be distributed to other connected units. Set the 75-ohm terminating switch to OFF to enable signal distribution.
  If distribution is not required or the signal terminates at this unit, set the switch to ON.
- For a description of editing procedures, refer to the editing controller's operation manual.
- Use an editing controller compatible with the RS422 (9 pin) serial interface.
- For advanced editing, provide the individual units with external sync signals.
- If a sync signal generator is not available, input signals from the player's VIDEO LINE OUT to the editing controller and recorder.

- Edit points will deviate if the edit timing setting on the recording VCR is not the same as that on the editing controller. Set the editing controller's edit timing to -7 FRAME.
  When using the RM-G820E, preroll time should be 5 seconds or more.
- Select "2 Frames" for the editing controller's colour frame mode.
- When using the RM-G820E or the RM-G870E, remember to activate the controller's LEARN function. Otherwise, retries are required frequently.
- When the BR-D85E or BR-D80E is used as a player ,set menu switch No.005 AUTO TRACKING to OFF or set the pre-roll time to 7 seconds or more.

# 4 MENU SWITCH SETTING

Bosides the physical switches on the unit, a selection of MENU switches are provided. These can be displayed on the oounter display or a connected monitor. Data set in the MENU switches are stored in the VCR's built-in non-volatile memory and are not erasod ovon whon the main powor is turned off.
Also available on the top menu display are the following convenient functions for menu switch setting.

- Storing and oalling up the current menu switch setting
- Restoring the menu switches to the factory setting
- Calling up tho Direct Accoss group of menu switches which are clustered by function (Direct Access facility)
- Erasing all registered contents on the User Page (User Page facility)

## 4-1 MENU DISPLAY MODES

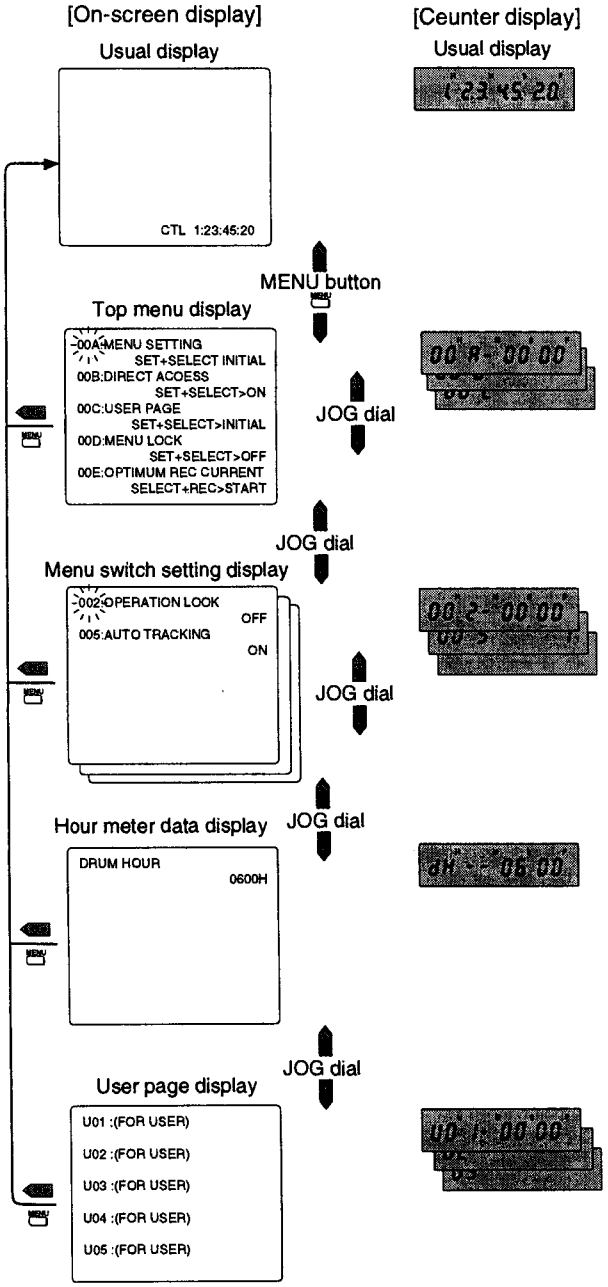


The menu display consists of four types of display modes.

- Press the MENU button to call up the menu screen. The starting items are shown on the counter display.The selected item blinks on the on-screen display.
- Turn the JOG dial to call up all four modes one after another.
- Press the MENU button to restore the usual display.

### 1 Top menu display

To select desired menu functions.

- **00A: MENU BETTING**
  - INITIAL(0) : Set the MENU switches to the factory settings.
  - USER LOAD (1) : Set the MENU switches to the stored settings in the user memory area.
  - USER SAVE (2) : To store the current menu switch setting in the user memory area.
- **00B DIRECT ACCESS (Direct Access facility)**
  With this switch set to ON (1), one-touch direct access to a functionally-related group of MENU switches such as SERVO and VIDEO or to the hour meter data or the Menu switches on user page is available simply by pressing with the specified button on the control panel.
- **00C USER PAGE (user page facility)**
  Erases all registered menu switch settings. To do this, select this menu function and press the SET and SELECT buttons simultaneously.
- **00D MENU LOCK function (menu lock facility)**
  Locks or unlocks menu switch settings.
  OFF (0) : Settings can be changed.
  ON (1) : Locking function is activated and menu switch settings (except for the top menu) cannot be changed.
- **00E OPTIMUM REC CURRENT function (recording current automatic adjustment function)**
  To automatically adjust the recording current, select this menu function and press the SELECT and REC buttons simultaneously.
  For details, refer to "Recording current adjustment" on page 29.

## 4-1 MENU DISPLAY MODES

### [2] MENU switch setting display

To access multiple menu switch items
The menu switches are organized in six functionally related groups.

- SERVO numbered 000
- VIDEO numbered 100
- SYSTEM numbered 300
- TIME CODE numbered 400
- ON-SCREEN numbered 500
- TBC/FRAME MEMORY numbered 600

### [3] Hour meter display

Shows the drum running hours.

### [4] Ussr page display

Shows the menu switch data registered on the user page.

## 4-2 MENU SWITCH SETTING

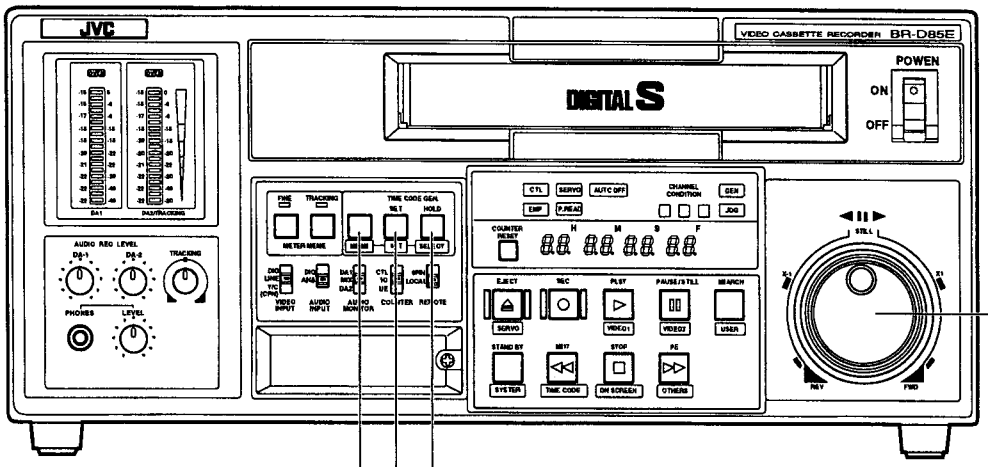


[Counter display]

[On-soreen display]

Top menu display

```
00A:MENU SETTING
        SET+SELECT INITIAL
00B:DIRECT ACCESS
        SET+SELECT>ON
00C:USER PAGE
        SET+SELECT>INITIAL
00D:MENU LOCK
        SET+SELECT>OFF
00E:OPTIMUM REC CURRENT
        SELECT+REC>START
```

Menu switch Ne. Set value Ne.

Menu switch setting display

```
002:OPERATION LOCK          OFF
005:AUTO TRACKING           ON
```

```
300:DIRECT EJECT            ON
301:DIRECT SEARCH           ON
302:BACK SPACE              ON
311:AUTO PLAY               OFF
312:AUTO REW                OFF
```

```
300:DIRECT EJECT            OFF
301:DIRECT SEARCH           ON
302:BACK SPACE              ON
311:AUTO PLAY               OFF
312:AUTO REW                OFF
```

### Operation procedure

1. **Call up the menu switch setting display.**
   Press the menu button to call up the menu screen on the counter display and on-screen display. When the top menu is displayed, turn the [JOG] dial to show the menu switch setting screen.
   - On-screen display data are output through the rear panel [VIDEO MONITOR OUT] connector.

   The counter display shows menu switch number.
2. **Select a menu switch item to set by turning the JOG dial.**
   - The selected menu switch number blinks on the on-screen display.
   - The menu switch number ohanges on the counter display.
3. **Select the setting value of the menu switch with the SELECT button.**
   Repeat steps 2 and 3 to change other items.
4. **Press the SET button to enter the finalized settings in memory.**
   - During setting, "SET" blinks on the counter display and "MENU SET" blinks on the on-screen display. When setting is complete, the normal screen is restored.

## 4-3 SAVING AND CALLING UP MENU SWITCH SETTINGS

The set menu switch data can be saved and called up with the 00A MENU SETTING item on the top menu display.
If you're going to use the current menu switch setting again later, you can store it in the user memory area. Then, if the setting is ohanged, you can restore it simply by calling the stored user data.
It is also possible to restore the initial factory settings.

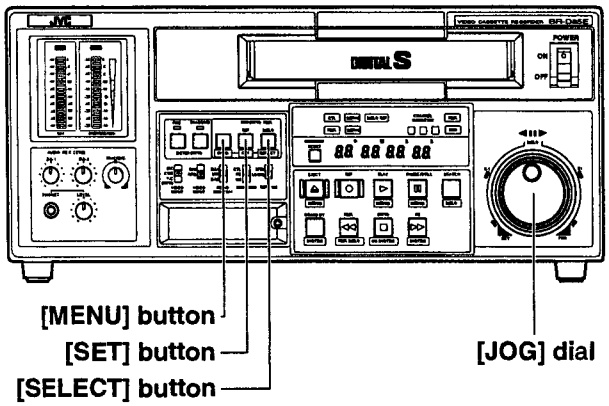


[Counter display] [On-screen display]

Top menu display

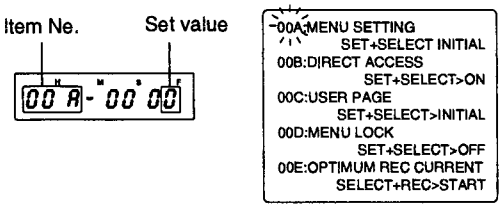


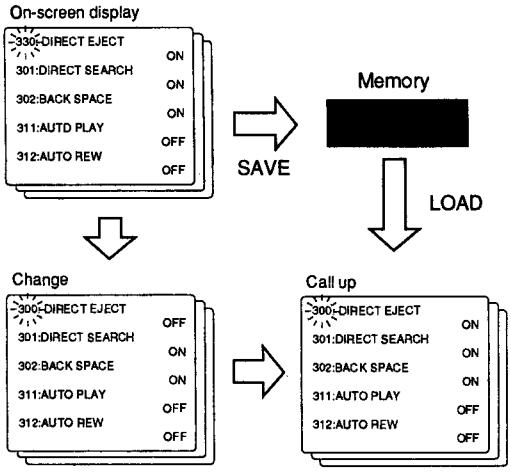


### Operation procedure

**1. Press the [MENU] button and turn the [JOG] dial to call up the top menu on the on-screen display and the counter display.**

**2. Select 00A: MENU SETTING.**

- Turn the JOG dial so that 00A appears on the counter display and 00A blinks on the on-screen display.

**3. Select the saving or calling-up function and execute it.**

#### When restoring the initial factory settings

- Select INITIAL (0) with the SELECT button.

⇩

- Press the SELECT button while pressing the SET button.

→ Factory settings are restored.
→ The Normal Display mode is restored.

#### To call up the saved menu setting

- Select USER LOAD (1) with the SELECT button.

⇩

- Press the SELECT button while pressing the SET button.

→ The saved menu switch setting comes up.
→ The Normal Display mode is restored.

#### To save the current menu switch setting

- Select USER SAVE (2) with the SELECT button.

⇩

- Press the SELECT button while pressing the SET button.

→ The current menu setting is stored in the user memory area. The data already saved is updated.
→ The Normal Display mode is restored.

# 4-4 CALLING UP THE FUNCTIONAL MENU SWITCH (Direct Access facility)

The Direct Access facility groups menu switches into major functionally related groups such as SERVO and VIDEO for easier access. These groups can be called up directly on the menu display. Hour meter data and User Page menu switches can also be accessed this way.
The Direct Access function can be turned on or off with 00B DIRECT ACCESS on the top menu display.

Counter display

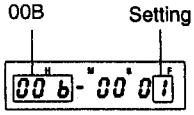


On-screen display

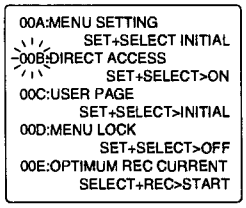


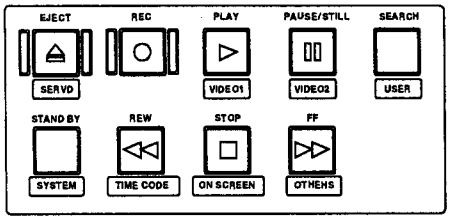


| Access item | Control button | Information on display |
|---|---|---|
| SERVO menu SW | EJECT | Menu SW numbered 000 |
| VIDEO menu SW | PLAY | Menu SW numbered 100 |
| SYSTEM menu SW | STANDBY | Menu SW numbered 300 |
| TC menu SW | REW | Menu SW numbered 400 |
| ON-SCREEN menu SW | STOP | Menu SW numbered 500 |
| TBC/Frame memory menu | STILL | Menu SW numbered 600 |
| Hour meter | FF | Drum running hours |
| User menu SW | SEARCH | Menu switch on the user page |

**Procedure**

## Enabling the Direct Access function

1. **Press the [MENU] button and turn the [JOG] diel to call up the top menu on the on-screen display and the counter display.**
2. **Turn the JOG dial and select 00B DIRECT ACCESS.**
   - Turn the JOG dial so that 00B appears on the counter display and 00B blinks on the on-screen display.
3. **Select ON (1) with the SELECT button.**
4. **Press the SELECT button while pressing the SET button.**
   The Direct Access function is set to ON.
   → The Normal Display mode is restored.

To disable Direct Access, select OFF (0) with the SELECT button and press the SELECT button while pressing the SET button.

## Using the Direct Access function

- Make sure the Direct Access function is set to ON.

1. **Press the MENU button to call up the menu setting display.**
2. **Press the corresponding front panel control button, depending on the item.**
   → The starting item is shown on the counter display and the first data appears on the on-screen display, depending on what has been selected.
   Move the items by turning the JOG dial.

The labels under the front panel control buttons indicate the functions that can be called up with the Direct Access facility.

# 4-5 USER PAGE REGISTRATION/CHANGE/DELETE (User Page function)

Up to five menu switch settings can be registered on the user page (User Page function).
The User Page funotion allows you to register frequently used menu switches for quicker access when you want to ohange the settings.

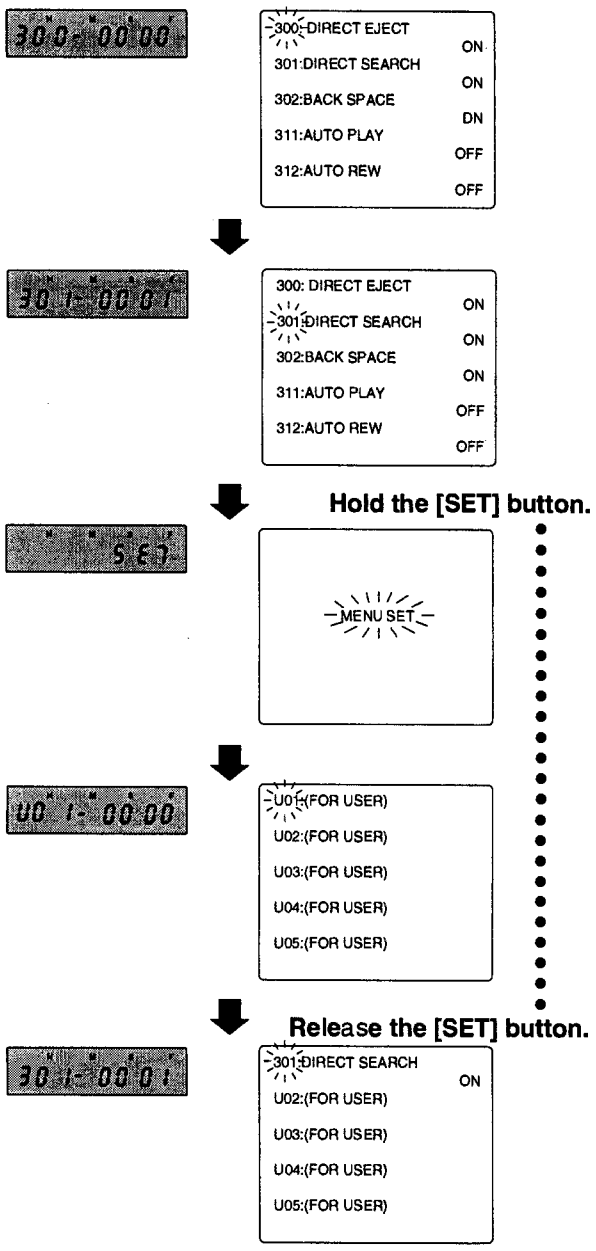


## Procedure

### Registering a menu switch on the User Page

1. **Call up the menu switch setting screen.**
   Press the [MENU] button.
   → Call up the menu screen on the counter display and on-screen display. When the top menu is displayed, turn the [JOG] dial to the menu switch setting screen.
2. **Turn the [JOG] dial to select the menu switch you want to register.**
   Menu switch selection is also possible using the "Direct access function".
3. **Press and hold the [SET] button.**
   During setting, "SET" blinks on the counter display and "MENU SET" blinks on the on-screen display.

   While still keeping the [SET] button pressed (even after the [SET] indication goes out), execute the next operation.
4. **After the [SET] indication disappears, turn the [JOO] dial to access the User Page screen.**
5. **Select the line you want to register on the User Page screen.**
   While keeping the [SET] button pressed, turn the [JOG] dial to select the line number (U01 - U05) you want to register.
   →The line number is displayed on the counter display; the line number blinks on the on-screen display.
6. **Release the [SET] button.**
   →The menu switch setting is displayed and the selected line is registered on the User Page.
7. **To register more items, repeat steps 2 through 6.**
   Registration of up to five items is possible.
6. **To end User Page registration, press the [MEHU] button. The normal display will be restored.**

- When steps **2** through **6** are performed on an already registered line, the new menu switch setting replaces the original line.
- Registered lines on the User Page can be moved. Select the menu switch you want to move and follow steps **3** through **6**.
- Items 00A to 00E on the top menu and the DH:DRUM HOUR menu switch cannot be registered on the User Page.

## 4-5 USER PAGE REGISTRATION/CHANGE/DELETE (User Page function) (con't)

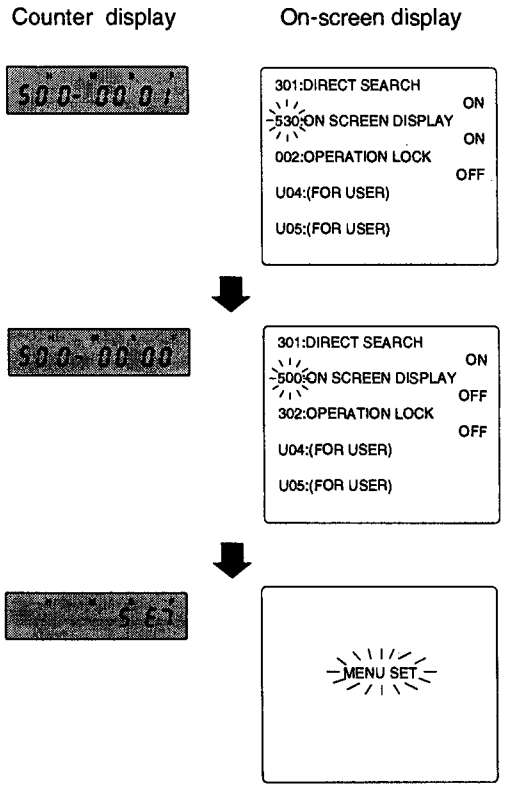


**Procedure**

**Changing the registered menu switch setting**

1. **Press the MENU button to call up the menu displsy mode.**
2. **Solect the menu switch item to be changed with the JOO dial.**
   - The selected menu switch number blinks on the on-screen display.
   - The menu switch number changes on the counter display.
3. **Press the SELECT button to select the setting vslue.**
   - The counter display shows the setting value.
4. **To change additional items, repeat steps 2 to 3.**
5. **Press the SET button to register the new setting.**
   → During setting, "SET" blinks on the counter display and "MENU SET" blinks on the on-screen display. When setting is complete, the normal screen is restored.

# 4-5 USER PAGE REGISTRATION/CHANGE/DELETE (User Page function) (con't)

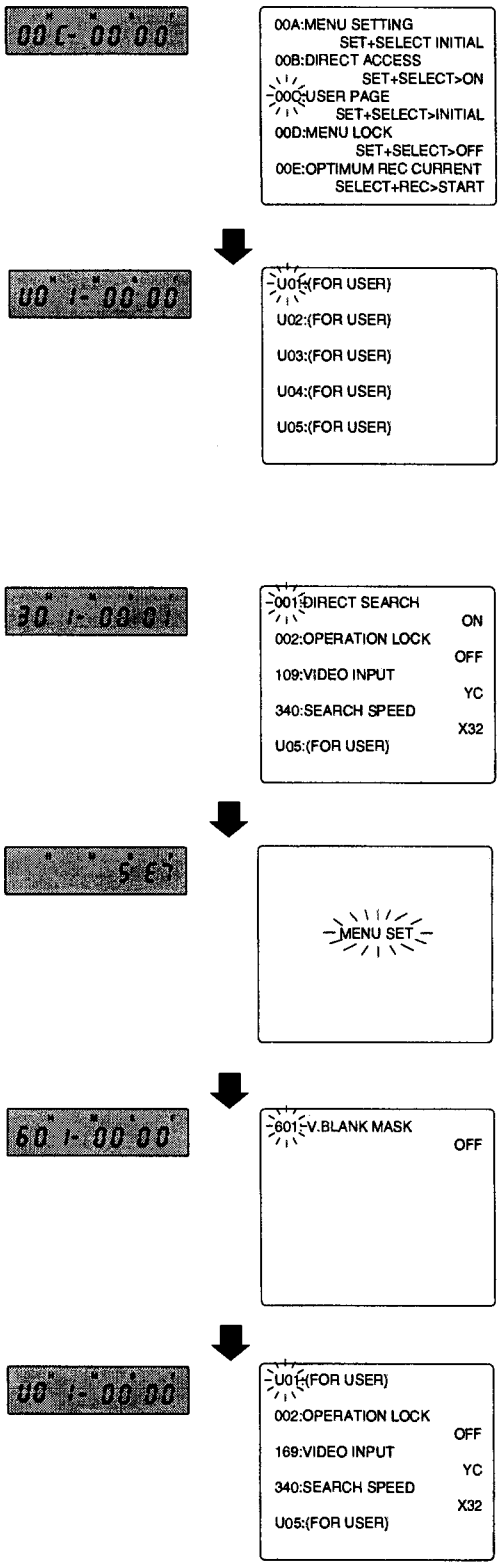


## Procedure

### Erasing all registered items on the User Page

1. **Press the [MENU] button and turn the [JOG] dial to call up the top menu.**
   → The top menu screen is shown on the on-screen display and counter display.
2. **Select "66C USER PAGE" on the top menu.**
   "00C" is shown on the counter display and "00C" blinks on the on-screen display.
3. **While keeping the [SET] button pressed, press the SELECT button.**
   → All registered items on the User Page are erased and the display returns to the normal display mode.

### Erasing registered items one at a time

1. **Press the [MENU] button to select the Menu Switch Display mode.**
2. **Turn the [JOG] dial to access the User Page display and select the menu switch item to be erased.**

* The selected menu switch number blinks on the on-screen display.

* The menu switch number is changed on the counter display.

3. **Hold the [SET] button pressed.**
   →During setting, "SET" blinks on the counter display and "MENU SET" blinks on the on-screen display.

> While still keeping the [SET] button pressed (even after the "SET" indication goes out), perform the next operation.

4. **Turn the [JOG] dial to move to the other menu switch screen pege. Release the [SET] button.**
   → The registered item on the User Page is erased.
5. **To erase more items, repeat steps 2 through 4.**
6. **Press the [MENU] button to finish.**
   → The normal display mode is restored.

## 4-6 HOW TO LOCK THE MENU SWITCH SETTINGS (menu switch lock function)

To prevent accidental erasure of menu switch settings, you can lock the menu switch settings. This function is not the same as operation lock.

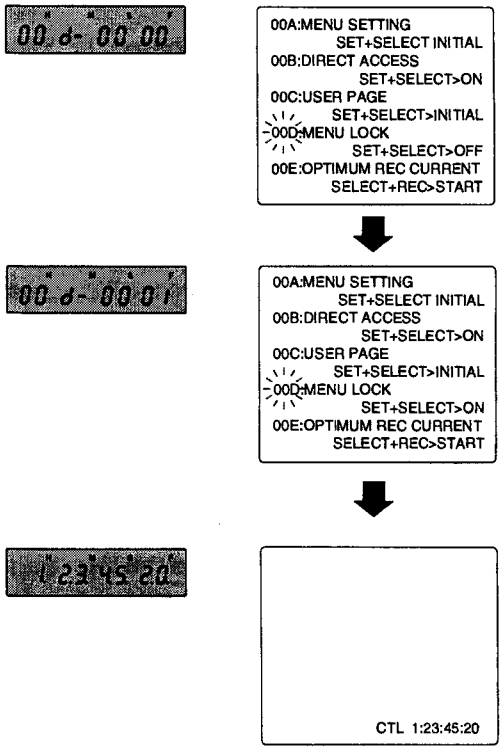


### Procedure

#### Activating the menu switch lock function

1. **Press the [MENU] button and turn the [JOG] dial to call up the top menu.**
   →The top menu screen is shown on the on-screen display and counter display.
2. **Select "00D: MENU LOCK" on the top menu with the [JOG] dial.**
   "00D" is shown on the counter display and "00D" blinks on the on-screen display.
3. **Select "ON (1)" with the [SELECT] button.**
4. **While keeping the [SET] button pressed, press the [SELECT] button.**
   →The menu switch lock function is set to "ON" and the normal display is restored.

To disable the menu switch lock function, select "OFF (0)" with the [SELECT] button. Then, while keeping the [SET] button pressed, press the [SELECT] button.

**When the menu switch lock function is activated, only the top menu settings can be changed. All other settings are locked.**

# 4-7 RECORDING CURRENT ADJUSTMENT (BR-D85E/BR-D80E only)

Thanks to this function, it is not necessary to adjust the recording current each time the tape is changed.
When a tape with a different optimum recording current is used, this function allows you to take advantage of this tape's perfermance.
If automatic adjustment is performed on a tape which has been used many times, its optimum recording current may be quite different from that of a new tape. In this case, perform automatic adjustment using the new tape.

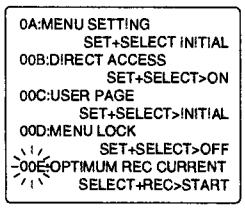


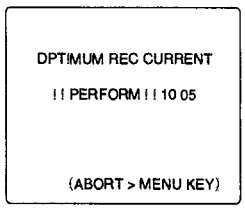


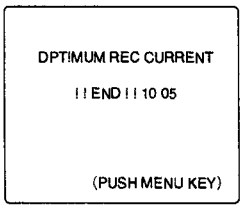


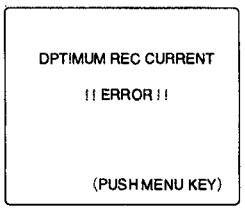


**Procedure**

**Activating the recording current adjustment function**

1. **Select either a component signal as the video input signal or set the menu switch No. 111 "REC SIGNAL SELECT" to "INTERNAL COLOR BAR".**
2. **Load a recording tape and engage the Stop mode.**
3. **Press the [MENU] button and turn the [JOG] dial to call up the top menu.**
   →The top menu screen is shown on the on-screen display and counter display.
4. **Select "00E OPTIMUM REC CURRENT" on the top menu with tha [JOG] dial.**
   • "00E" is shown on the counter display and "00E" blinks on the on-screen display.
5. **While keeping the [REC] button pressed, press the SELECT button.**
   →Automatic recording current adjustment will start. It takes several minutes to complete the automatic adjustment.
   • To interrupt the adjustment, press the [MENU] button twice.

   • When adjustment is finished, the indication shown on the left is displayed on the on-screen display.
6. **When the indication on the left figure is shown on the on-screen display, press the MENU button twice.**
   → The previous display mode is restored.

   • When the adjustment cannot be completed, the indication shown on the left is displayed on the on-screen display.
   In this case, change the recording position or replace the recording tape.

# 4-8 HOUR METER DATA DISPLAY

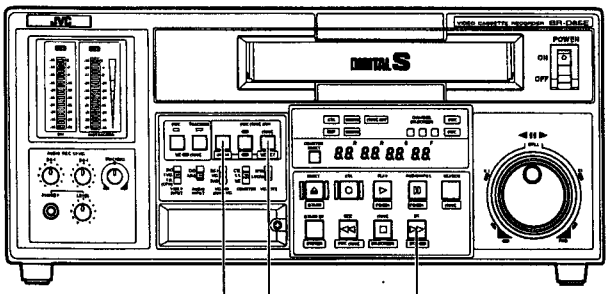


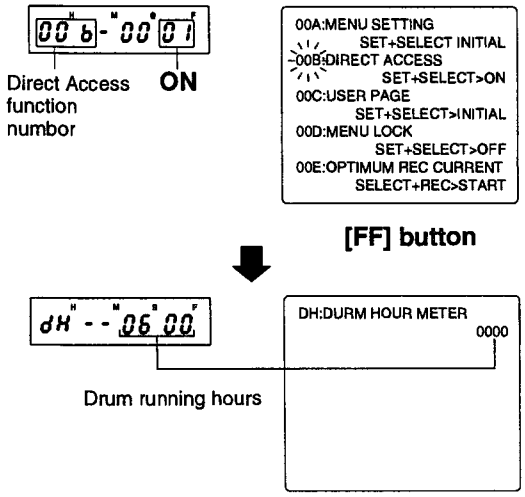


Drum running hours can be displayed on the counter display and the on-screen display. Use this information as a guide to choosing the appropriate maintenance interval.

## Procedure

1. **Press the [MENU] button.**
   →The Menu Display mode is engaged.

2. **Select the DN displey by turning the [JOG] dial.**
   → Hour meter data (drum running hours) is displayed on the counter display and the on-screen display (0000H - 9999 H).

3. **To return to the normal display mode, press the [MENU] button.**

When the Direct Access function is set to ON, press the [FF] button to accelerate item indication.

# 5 MENU SWITCH SETTING DETAILS

## 5-1 MENU SWITCH LIST

Gives the names and brief description of the menu switches. See reference pages for details.

Any menu switch No. in [ ] are not available on the BR-D50E. Menu switch No. 351 "PRE READ" is available only on the BR-D85E.

| Functional group | No | Namee | Deecription | Reference Page |
|---|---|---|---|---|
| SERVO | 002 | OPERATION LOCK | Operation mode lock ON/OFF | 32 |
| | 005 | AUTO TRACKING | Selects auto/manual tracking. | 32 |
| VIDEO | 103 | WIDE A8PECT ID REC | Selects ID record data for wide aspect picture. | 32 |
| | 109 | VIDEO INPUT | Selects video input signal, YC443/component. | 33 |
| | 110 | VIDEO PHASE | Selects video phase adjust method selection. | 33 |
| | 111 | REC SIGNAL SELECT | Selects video record signal, input signal/colour bar. | 33 |
| | 112 | ECC MODE | Selects error correction function. | 33 |
| | 113 | EXTRA LINE REC | Selects video input signal to be recorded on extra line. | 34 |
| | 114 | EXTRA LINE-1 REC SEL | Selects input signal line to berecorded on extra line -1. | 34 |
| | 115 | EXTRA LINE-2 REC SEL | Selects input signal line to be recorded on extra line -2. | 34 |
| | 116 | EXTRA LINE PB | Selects extra line data adding mode in playback. | 35 |
| | 117 | EXTRA LINE-1 PB SEL | Selects line for additional extra line-1 data output. | 35 |
| | 11B | EXTRA LINE-2 PB SEL | Selects line for additional extra line-2 data output. | 35 |
| | 119 | SLOW PICTURE | Selects the Slow mode. | 36 |
| SYSTEM | 300 | DIRECT EJECT | Direct eject ON/OFF | 36 |
| | 301 | DIRECT SEARCH | Direct search ON/OFF | 36 |
| | 302 | BACK SPACE | Back space operation ON/OFF | 36 |
| | 311 | AUTO PLAY | Auto play operation ON/OFF | 36 |
| | 312 | AUTO REW | Auto rewind operation ON/OFF | 36 |
| | 317 | 9PIN DEVICE ID | Selects device type ID returned to 9-pin remote control. | 37 |
| | 326 | COUNTER MEMORY | Counter memory function ON/OFF | 37 |
| | 340 | SEARCH SPEED | Selects dial search speed. | 37 |
| | 351 | PRE READ | PRE READ function ON/OFF | 37 |
| | 355 | PB/EE SEL STANDBY | Selects mode in standby. | 36 |
| | 356 | PB/EE SEL FF/REW | Selects mode in FF/REW. | 38 |
| | 357 | DIAG AT POWER ON | Automatic diagnosis operation ON/OFF at power ON. | 38 |
| TIME CODE | 400 | VITC LINE-1 SELECT | Sets line fcr adding VITC-1. | 39 |
| | 401 | VITC LINE-2 SELECT | Sets line for adding VITC-2. | 39 |
| | 403 | REGEN MODE | Selects mcde of time code to be regenerated. | 39 |
| | 409 | EXT REGEN TC | Selects external source for regeneration. | 40 |
| | 450 | SUB TC (VITC) REC | Selects sub time code data to be recorded. | 40 |
| | 451 | VITC OUT SELECT | Selects output VITC main/sub time code. | 40 |
| | 452 | SEARCH LTC | Sets LTC time code output method in the Search mode. | 40 |
| ON-SCREEN | 500 | ON-SCREEN DISPLAY | On-screen ON/OFF | 41 |
| | 501 | CHARA H POSITION | Sets on-screen horizontal display position. | 41 |
| | 502 | CHARA V POSITION | Sets on-screen vertical display position. | 41 |
| | 504 | INFORMATION SELECT | Selects on-screcn information. | 41 |
| TBC. FRAME MEMORY | 601 | V.BLANK MASK | V.SYNC masking ON/OFF in playback. | 41 |

## 5-2 MENU SWITCH SETTING CONTENT

Menu switch No. in [redacted] not included on BR-D50E.

<SERVO> [ ]: Factory setting

| Item | | Setting | | Content |
|---|---|---|---|---|
| Menu SW No. | On-screen display | Counter display | On-screen display | |
| 002 | OPERATION LOCK | [0]<br>1 | [OFF]<br>ON | Switches the operation mode lock ON/OFF. Set to ON to lock the VCR in the current operation mode.<br>When set to ON, you cannot operate the control buttons, switches, knobs and dials on the VCR or change any menu switch settings other than this menu switch itself.<br>Only the POWER switch ,the PHONES LEVEL adjust knob remain operable. |
| 005 | AUTO TRACKING | 0<br>[1] | OFF<br>[ON] | Selects ON or OFF tracking adjustment in the Play mode.<br>When set to ON, the tracking value is automatically adjusted to the optimum position when the Play mode is engaged. The TRACKING knob is not operable.When the Automatic Tracking mode is engaged, tracking adjustment takes several seconds. During this time, signals on the linear track are output as audio signals.<br>When set to OFF, tracking can be adjusted manually with the TRACKING knob. |
| <VIDEO> | | | | |
| [redacted] | WIDE ASPECT ID REC | [0]<br>1<br>2 | [AUTO]<br>WIDE<br>NORMAL | Enables or disables recording of the ncrmal/wide picture size ID signal.<br>AUTO: Automatically detects and records the ID signal if present in input Y/C signals.<br>WIDE: Records the ID signal regardless of the type of signal input.<br>NORMAL: Does not record ID signals even if present in input Y/C signals. |

## 5-2 MENU SWITCH SETTING CONTENT

Menu switch No. in ▒▒ not included on BR-D50E.

[ ] : Factory setting

| Item | | Setting | | Content |
|---|---|---|---|---|
| Menu SW No. | On-screen display | Counter display | On-screen display | |
| 109 | VIDEO INPUT | [0]<br>1 | [Y/C]<br>CPN | Selects the video input signal when the front panel [VIDEO INPUT] switch is set to Y/C (CPN).<br>Y/C : Receives a YC separate signal from the rear panel Y/C443 input connector.<br>CPN : Receives a component signal from the rear panel [Y/R-Y/B-Y] input connector. |
| 110 | VIDEO PHASE | [0]<br>1 | [UNITY]<br>VARIABLE | Selects whether or not to perform phase adjustment on the video signal output from the rear panel [VIDEO LINE-1], [VIDEO LINE-2] and [Y/C443] output connectors.<br>UNITY: Video phase adjustment is disabled and cannot be activated even by turning the [VIDEO PHASE] control on the front panel VIDEO CONTROL section.<br>VARIABLE: Video phase adjustment can be applied by turning the [VIDEO PHASE] control on the front panel VIDEO CONTROL section. |
| 111 | REC SIGNAL SELECT | [0]<br>1 | [INCOME]<br>INTERNAL COLOR BAR | Selects a signal from the video input connector or a colour bar signal from the built-in signal generater for use as a video signal in the EE and Record modes.<br>INCOME: Records a signal from the rear panel video input connector.<br>INTERNAL COLOR BAR: Records a colour bar signal from the built-in signal generator.This is not an EBU standard colour bar signal. |
| 112 | ECC MODE LEVEL | [0]<br>1<br>2 | [NORMAL]<br>NO CANCEL<br>NO CORRECTION | This activates or deactivates the error corroction circuit (error conceal, error correction).<br>NORMAL: Activates all error correction circuitry.<br>NO CONCEAL: The error conceal circuit does not function.<br>NO CORRECTION: Neither the error conceal nor the error correction circuits function.<br>For details, refer to page 52. |

## 5-2 MENU SWITCH SETTING CONTENT

Menu switch No. in [redacted] not included on BR-D50E.

[ ]: Factery setting

| Item | | Setting | | Content |
|---|---|---|---|---|
| Menu SW Ne. | On-screen display | Counter display | On-screen display | |
| 113 | EXTRA LINE REC | [0]<br>1 | [FIX]<br>USER SETTING | Selects an input video signal line to record on extra lines.<br>FIX: Rocords the information from line 21 of the input signal on the extra lino -1 and the information from line 22 of the input signal on the extra line -2.<br>USER SETTING: Records the information from two user-selected input signal lines on the extra lines -1 and -2.<br>● User-designated lines can be selected with menu switches No. 114 and No. 115. |
| 114 | EXTRA LINE-1 REC SEL | 00<br>01<br>02<br>⋮<br>[16]<br><br>17<br>⋮<br>33 | 6<br>7<br>8<br>⋮<br>[ 22]<br><br>319<br>⋮<br>335 | Selects an input video signal line to be recorded on extra line -1.<br>(Effective only when menu switch No. 113 EXTRA LINE REC is set to USER SETTING.)<br>● Select one line from LINE 6 TO LINE 22 orLINE 319 TO LINE 335. |
| 115 | EXTRA LINE-2 REC SEL | 00<br>01<br>02<br>⋮<br>16<br><br>17<br>⋮<br>[33] | 6<br>7<br>6<br>⋮<br>22<br><br>319<br>⋮<br>[335] | Selects the input video signal line to be recorded on extra line -2.<br>(Effective only when menu switch No. 113 EXTRA LINE REC is set to USER SETTING.)<br>● Select one line from LINE 6 TO LINE 22 or LINE 319 TO LINE 335. |

## 5-2 MENU SWITCH SETTING CONTENT

[ ] : Factory setting

| Item | | Setting | | Content |
|---|---|---|---|---|
| Menu SW No. | On-screen display | Counter display | On-screen display | |
| 116 | EXTRA LINE PB | [0]<br>1<br>2<br><br>3 | [MUTE]<br>AUTO<br>AUTO WITH ALIAS<br>USER SETTING | Selects the mode for adding extra line information to the playback video signal in the Play mode.<br>MUTE: Does not add any extra line information to the playback video signal.<br>AUTO: Outputs a video signal with the extra line information added to the line selected during extra line recording.<br>AUTO WITH ALIAS: Outputs a video signal with the extra line information added to the line selected during extra line recording. Here, the video signal is delivered with the same information added to its counterpart line (for instance, the counterpart line for line 10 is line322).<br>USER SETTING: Outputs a video signal with extra line information added to the two user-designated lines. These lines can be selected with menu switches No. 117 and 118. |
| 117 | EXTRA LINE-1 PB SEL | 00<br>01<br>⋮<br>[16]<br><br><br>17<br>⋮<br>33 | 6<br>7<br>⋮<br>[22]<br><br><br>319<br>⋮<br>335 | Selects a playback video signal line to add the information recorded on extra line -1 for output. (Effective only when menu switch No. 116 EXTRA LINE PB is set to USER SETTING.)<br>● Select one line from LINE 6 TO LINE 22 or LINE 319 TO LINE 335.<br>* When menu switch No. 601 "V. BLANK MASK" is set to ON, the information is not output to the extra line.<br>Also, when information such as sub time code overlaps on the same line, the information is not output to the extra line. |
| 118 | EXTRA LINE-2 PB SEL | 00<br>01<br>02<br>⋮<br>16<br><br><br>17<br>⋮<br>[33] | 6<br>7<br>8<br>⋮<br>22<br><br><br>319<br>⋮<br>[335] | Selects a playback video signal line to add the information recorded on extra line -2 for output. (Effective only when menu switch No. 116 EXTRA LINE PB is set to USER SETTING.)<br>● Select one line from LINE 6 TO LINE 22 or LINE 318 TO LINE 334.<br>* When menu switch No. 801 "V. BLANK MASK" is set to ON, the information is not output to the extra line.<br>Also, when information such as time code overlaps on the same line, the information is not output to the extra line. |

## 5-2 MENU SWITCH SETTING CONTENT

Menu switch No. in ▒▒ not included on BR-D50E.

[ ] : Factory setting

| Item | | Setting | | Content |
|---|---|---|---|---|
| Menu SW No. | On-screen display | Counter display | On-screen display | |
| 119 | SLOW PICTURE | 0<br>[1] | FRAME<br>[FIELD ] | Selects the type of picture output in the Slow Play mode.<br>FRAME : Outputs a frame picture.<br>FIELD : Outputs a field picture. |
| <SYSTEM> | | | | |
| 300 | DIRECT EJECT | 0<br>[1] | OFF<br>[ON] | Selects Direct Eject ON/OFF.<br>OFF: Eject is enabled only in the Stop (standby-on/off) mode.<br>ON: Eject is enabled in any mode. |
| 301 | DIRECT SEARCH | 0<br>[1] | OFF<br>[ON] | Selects Direct Search ON/OFF<br>OFF: The search/jog dials can be used when the [SEARCH] button is pressed.<br>ON: Search and jog can be enabled in any mode except Record. |
| 302 | BACK SPACE | 0<br>[1] | OFF<br>[ON] | Enables or disables backspacing after Record Pause.<br>OFF: No backspacing after Record Pause<br>ON: Backspacing after Record Pause<br>When set to OFF, recording will start more quickly than when set to ON. However, transitional picture quality is affected at the start of recording. |
| 311 | AUTO PLAY | [0]<br>1 | [OFF]<br>ON | Selects the mode engaged when the tape ends in the REW mode.<br>OFF: Stop (stanby-on) is engaged.<br>ON: Play is engaged. |
| 312 | AUTO REW | [0]<br>1 | [OFF]<br>ON | Selects the mode engaged when the tape ends in the Play or Record mode.<br>OFF: Stop (standby on) mode is engaged.<br>ON: REW is engaged. |

## 5-2 MENU SWITCH SETTING CONTENT

[ ] : Factory setting

| Item | | Setting | | Content |
|---|---|---|---|---|
| Menu SW No. | On-screen display | Counter display | On-screen display | |
| 317 | 9PIN DEVICE ID | [0]<br>1<br><br>2<br><br>3 | [JVC D80]<br>OTHER TYPE-1<br>OTHER TYPE-2<br>OTHER TYPE-3 | Device-type interrogation from the 9-pin remote control<br>Selects the ID code to reply for TYPE REQUEST.<br>JVC D80 : Replies with ID code for the BR-D80E, BR-D50E, BR-D85E and BR-D51E.In addition to JVC models, the following Sony models can be used.<br>OTHER TYPE-1 : Replies with ID code for the BVU-800.<br>OTHER TYPE-2 : Replies with ID code for the BVW-75.<br>OTHER TYPE-3: Replies with ID code for the DVW-C500. |
| 326 | COUNTER MEMORY | [0]<br>1 | [OFF]<br>ON | Selects counter memory ON/OFF.<br>OFF: Counter memory function is disabled.<br>ON: Counter memory function is enabled.<br>The Stop (standby on) mode is engaged when the CTL counter is close to 0:00:00:00 during FF or REW operation. |
| 340 | SEARCH SPEED | [0]<br>1 | [x 32]<br>x 17 | Selects the maximum search speed.<br>X32: Maximum search speed is +/-32 times normal when the search dial is turned fully clockwise or counterclockwise.<br>X17: Maximum search speed is +/-17 times normal when the search dial is turned fully clockwise or counterclockwise. |
| 351 | PRE READ | [0]<br>1 | [OFF]<br>ON | Switches the pre-read function on and off.<br>OFF : The pre-read function is disabled.<br>ON : The pre-read function is enabled.<br>During editing, pre-read pictures are output from the recorder's video output connector. Refer to "Pre-read function" on page 57.<br>In assemble editing, the pre-read function is always enabled regardless of this setting.<br>This item is available only on the BR-D85E. |

## 5-2 MENU SWITCH SETTING CONTENT

[ ] : Factory setting

| Item | | Setting | | Content |
|---|---|---|---|---|
| Menu SW No. | On-screen display | Counter display | On-screen display | |
| 355 | PB/EE SEL STANDBY | 0 [1] | EE [PB] | Selects PB or EE mode in the Stop mode.<br>EE: Outputs EE signal. For BR-D50E, black background picture is output.<br>PB: Outputs playback signal.When the Stop mode is first engaged after a cassette is loaded, a black picture is output.<br>When set to EE, a color bar signal can be delivered from the built-in signal generator by setting menu switch No. 111 REC SIGNAL SELECT to INTERNAL COLOR BAR. (BR-D85E/BR-D80E only.) |
| 356 | PB/EE SEL FF/REW | 0 [1] | EE [PB] | Selects the PB or EE mode in the FF and REW modes.<br>EE: Outputs EE signal. For BR-D50E, black back picture is output.<br>PB: Outputs playback signal.<br>When set to EE, a colour bar signal can be delivered from the built-in signal generator by setting menu switch No. 111 REC SIGNAL SELECT to INTERNAL COLOR BAR. (BR-D85E/BR-D80E only.) |
| 357 | DIAG AT POWER ON | [0] 1 | [OFF] ON | Selects whether or not self-diagnosis is executed when the power is turned on.<br>OFF: Self-diagnosis is not executed.<br>ON: Self-diagnosis is executed. While diagnostics are running ("DIAGNOSIS" blinks on the screen), you cannot load a cassette. Do not try to forcibly load it. After completion of diagnostics, a warning indication is shown if there is an abnormality. Refer to "WARNINGS WITH INDICATORS" on page 71 - 72. |

## 5-2 MENU SWITCH SETTING CONTENT

Menu switch No. in ▒▒ not included on BR-D50E.

<TIME CODE> [ ]: Factory setting

| Item | | Setting | | Content |
|---|---|---|---|---|
| Menu SW No. | On-screen display | Counter display | On-screen display | |
| 400 | VITC LINE-1 SELECT | 0<br>1<br>2<br>3<br>4<br>5<br>6<br>7<br>8<br>9<br>10<br>11<br>[12]<br>13<br>14<br>15 | 7<br>8<br>9<br>10<br>11<br>12<br>13<br>14<br>15<br>16<br>17<br>18<br>[19 ]<br>20<br>21<br>22 | Selects a VITC line for time code insertion from lines 7 – 22.<br>Sets the VITC insert line which will be superimposed over video signals in the Play mode. |
| 401 | VITC LINE-2 SELECT | 0<br>1<br>2<br>3<br>4<br>5<br>6<br>7<br>6<br>9<br>10<br>11<br>12<br>13<br>[14]<br>15 | 7<br>8<br>9<br>10<br>11<br>12<br>13<br>14<br>15<br>16<br>17<br>18<br>19<br>20<br>[21]<br>22 | Selects a VITC line for time code insertion from lines 7 – 22.<br>Sets the VITC insert line which will be superimposed over video signals in the Play mode. |
| 403 | REGEN MODE | [0]<br>1<br>2 | [TC&UB]<br>TC<br>UB | Selects TC or UB in the Time Code Regeneration mode.<br>TC&UB: Regenerates time code and user bits.<br>TC: Regenerates time code only. Preset data are engaged as user bits.<br>UB: Regenerates user bits only. Preset data are engaged as time code. |

## 5-2 MENU SWITCH SETTING CONTENT

Menu switch No. in ▒▒ not included on BR-D50E.

[ ]: Factory setting

| Item | | Setting | | Content |
|---|---|---|---|---|
| Menu SW No. | On-screen display | Counter display | On-screen display | |
| 409 | EXT<br>REGEN TC | [0]<br>1 | [LTC]<br>VITC | Selects an LTC or VITC reference time code in the Regeneration mode.<br>LTC: Regenerates with reference to the LTC delivered from the rear panel TC IN connector.<br>VITC: Regenerates with reference to the VITC delivered from the rear panel VIDEO IN connector. |
| 450 | SUB TC(VITC)<br>REC | 0<br>[1] | OFF<br>[ON] | Selects the time code to be recorded in the sub time code.<br>OFF: "00:00:00:00" is always recorded on the sub timecode.<br>ON: Input VITC is recorded in sub time code. |
| 451 | VITC OUT<br>SELECT | 0<br>[1] | SUB TC<br>[TC] | Selects the VITC to be superimposed on video output signal.<br>SUB TC: Sub time code is delivered to the output VITC.<br>TC: Main time code is delivered to the output VITC. |
| 452 | SEARCH LTC | 0<br>[1] | [OFF]<br>ON | Enables or disables LTC output in the shuttle Search mode.<br>LTC is output from the TC OUT connector.<br>OFF : LTC is output only in X1 tape speed.<br>ON : LTC is output in all search speed modes. Continuous time code is not available. |

## 5-2 MENU SWITCH SETTING CONTENT

<ON-SCREEN> [ ]: Factory setting

| Item | | Setting | | Content |
|---|---|---|---|---|
| Menu SW No. | On-screen display | Counter display | On-screen display | |
| 500 | ON SCREEN DISPLAY | 0<br>[1] | OFF<br>[ON] | Selects On-screen ON/OFF.<br>On-screen information is delivered from the VIDEO MONITOR connector.<br>OFF: On-screen display disabled.<br>ON: On-screen display enabled. |
| 501 | CHARACTOR H POSITION | [0]<br>⋮<br>6 | [0]<br>⋮<br>6 | Selects the on-screen display start position from 7 horizontal positions (0-6).<br>The factory-set 0 position is at the right end of the monitor display. The position shifts leftward as the numbers increase. |
| 502 | CHARACTOR V POSITION | [0]<br>⋮<br>11 | [0]<br>⋮<br>11 | Selects an on-screen display start position from 12 vertical positions (0-11).<br>The factory-set 0 position is at the bottom of the monitor display. The position shifts upward as the numbers increase.<br>When menu switch No. 504 "INFORMATION SELECT" is set to "TIME+MODE", the position set with 10 is the same as that with 11. |
| 504 | INFORMATION SELECT | 0<br>[1] | TIME<br>[TIME + MODE] | Selects on-screen display data.<br>TIME: Displays time data only.<br>TIME + MODE: Displays time data and mode data.<br>When menu switch No. 451 "VITC OUT SELECT" is set to SUB TC, the sub time code data is shown on a different line at the same time.<br>* A slight delay occurs in the displayed time code data. Do not dub the on-screen data as it is to a tape for off-line editing. |
| <TBC. FRAME MEMORY> | | | | |
| 601 | V BLANK MASK | 0<br>[1] | OFF<br>[ON] | Selects whether or not to perform V.SYNC masking in the Play mode.<br>OFF: No masking<br>ON: Masking available |

# 6 PREPARATION

## 6-1 OPERATION MODE LOCK

This unit is provided with an operation mode lock facility. This function prevents accidental changes to switch and control settings. When this function is ON, currently selected modes and knob or switch positions cannot be adjusted.

- Use menu switch No. 002 OPERATION LOCK to enable this function.
- With this function enabled, operation of all front panel control buttons, adjustment knobs, dials and switches is disabled and changes to menu switch settings are not possible. When this function is activated, it is not possible to change menu switch settings. However, the [PHONES LEVEL] control, the VIDEO CONTROL-related controls behind the front cover, and menu switch No. 002 "OPERATION LOCK" (to release the operation mode lock function) can be used.

### Procedure

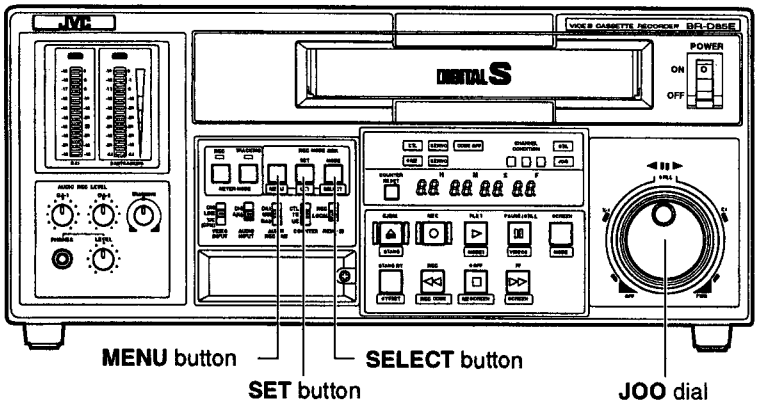


**1. Make all deaired aettinga and operate as usual.**

**2. Engago tho operation lock function.**

① Press the MENU button to call up the menu setting display.

② Turn the JOG dial and select menu switch No. 002 OPERATION LOCK.

If the Direct Access facility is ON, press the EJECT button to call up the menu/setting display more quickly.

③ Select ON(1) with the SELECT button. (See page 32.)

④ Press the SET button.

The operation lock function is ON.

After the SET indication blinks for several seconds, the normal counter and on-screen displays are restored.

**3. To cancel the operation mode lock facility, set menu switch No. 002 OPERATION LOCK to OFF (0).**

## 6-2 STANDBY ON/OFF

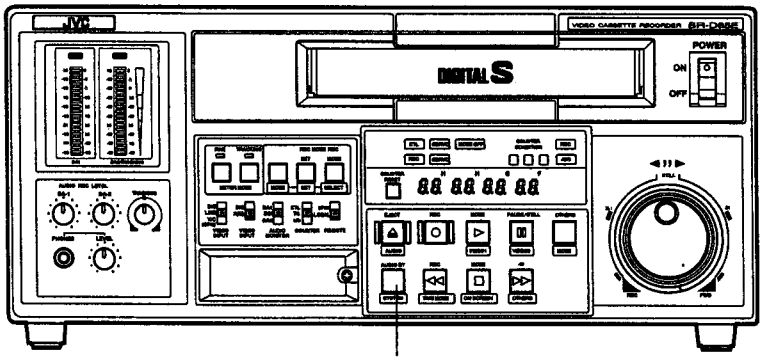


**STANDBY** button

**Notes**

- Output mode selection in the Standby ON/OFF mode Select the mode with menu switch No. 355 PB/EE SEL STANDBY .
  - EE (0): EE mode is engaged, allowing the input signal to be monitored.
  - PB (1): Playback signals can be monitored. A black picture is output in the Standby ON/OFF mode after a tape has been loaded.
- To output a colour bar signal, set menu switch No. 355 to EE (0) and set menu switch No. 111 REC SIGNAL SELECT to INTERNAL COLOR BAR (1). The built-in signal generator will produce a colour bar signal.
- When menu switch No. 355 PB/EE SEL STANDBY is set to PB (1), you can monitor input signals by pressing the [REC] button.

Two different sub modes are available in the Stop mode.

Standby ON mode: The tape is loaded and the head drums are rotating, permit ting quick start of operation when another mode is engaged. The **STANDBY** button is illuminated.

Standby OFF mode: The tape is loaded but the drums are stationary. The tape and the heads are protected against damage in this mode. The **STANDBY** button's light goes out.

The Output mode in the Standby ON and OFF modes can be selected with menu switches No. 355 and No. 111 (see notes for details).

### Procedure

- Standby ON mode is engaged when the cassette is loaded or when the Stop mode is engaged with the STOP button.
- To change the Standby ON mode to the Standby OFF mode, press the STANDBY button.
  → The **STANDBY** button goes out, indicating that the Standby OFF mode has been engaged.
- To change the Standby OFF mode to Standby ON mode, press the STANDBY button.
  → The **STANDBY** button is illuminated, indicating that the Standby ON mode has been engaged.

* The Standby ON mode is automatically switched to the Standby OFF mode after about 5 minutes to protect the tape and the heads.

# 6-3 LOADING AND UNLOADING THE CASSETTE

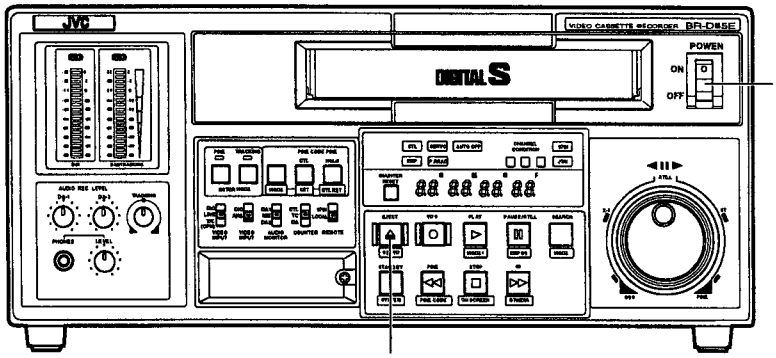


**Notos**

- To call up the on-screen display, set menu switch No. 500 ON-SCREEN DISPLAY to ON. On-screen data are output through the rear panel VIDEO MONITOR OUT connector.
- Be sure to use only S cassette tapes. VHS/S-VHS cassettes cannot be used.

## Loading the cassette

**1. Turn the POWER switch on.**

→ The counter display is illuminated.

* If a cassette is not loaded, the on-screen display indicates NO CASSETTE.

**2. Load the cassette.**

If tape tension is slack, tighten it before inserting the cassette. Insert the cassette with the cassette label facing you. Press the center of the cassette gently until the loading mechanism takes over.

→ The cassette is automatically drawn into the slot and the **STOP** button lights. When the cassette is fully loaded, the Standby ON mode is engaged and the **STANDDY** button lights.

## Unloading the cassette

- Conditional EJECT operation
  When menu switch No. 301 DIRECT EJECT is set to OFF (0), the EJECT button is enabled only in the Stop mode.
  With this switch set to ON (0), tapes can be ejected in any mode.

**1. Press the EJECT button.**

→ The cassette is ejected.
The CTL counter is reset.

**2. Remove the cassette from the slot.**

**Precautions:**

- Do not insert anything other than a cassette into the slot.
- Do not try to remove the cassette once automatic cassette loading has begun. Wait until loading is complete, then press the EJECT button.

# 7 RECORDING (BR-D85E/BR-D80E only)

## 7-1 PREPARATION FOR RECORDING

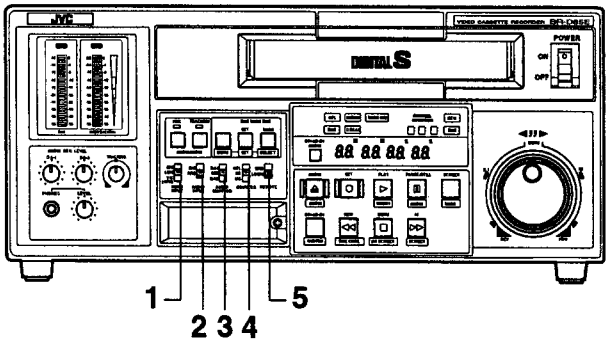


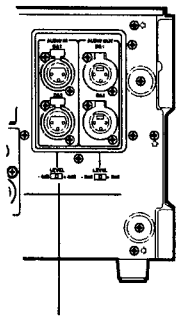

LEVEL switch

### Front panal switch sotting

**1. Soloot an input vidao signal with tho VIDEO INPUT switch.**

DIG: To record a serial digital video signal. If using the BR-D80E, you must install the optional SA-D80U digital interface board.

LINE: To record a composite video signal from the LINE input connector

Y/C (CPN): To record a YC separate signal from the Y/C 443 connector or a component signal from the Y/B-Y/R-Y connector.

* Select an input signal with menu switch No. 109 VIDEO INPUT SELECT.

**2. Seloot an input audio signal with tho AUDIO INPUT swltch.**

DIG: To record a serial digital audio signal. If using the BR-D80E, you must install the optional SA-D80U digital interface board. To synchronize audio and video signals when recording digital audio signals, input video signals to the digital audio equipment as well.

ANA: To record an analog audio signal from the AUDIO input connector.

**3. Soloot an audio signal to output through tho roar panel AUDIO MONITOR OUT connoctor or through ths front panel PHONES jack with the AUDIO MONITOR swltoh.**

**4. Set tho taps countor.**

Select time data to be displayed on the counter display or on-screen display with the COUNTER switch.

**5. Soloct romoto or local operation.**

Set the REMOTE switch to LOCAL to use the main unit. Set it to 9PIN to use a RS-422 serial remete control unit.

### Roar panel switch satting

**6. Soloct tha input audio levol (-6 dB or + 4 dB) with tha LEVEL swltch.**

### Monu switch sotting

Set the menu switches as required.

- **On-scroan itoms**
  - On-screen ON/OFF... No. 500 ON-SCREEN DISPLAY Page 41
    Factory setting: ON (1)
    On-screen data is output through VIDEO MONITOR OUT.
- **Vidoo itoms**
  - Wide aspect ID signal selection
    ... No. 103 WIDE ASPECT ID REC Page 32
    Factory setting: AUTO (0)
  - Recording a colour bar signal from the built-in signal generator
    ... No. 111 REC SIGNAL SELECT Page 33
    Factory setting: INCOME (0)
    Set to INTERNAL COLOR BAR(1) when recording a colour bar.
- **Racord pausa solection**
  - Backspacing selection
    ... No. 302 BACKSPACE Page 38
    Factory setting: ON (1)

This unit cannot be used for sound-on-sound editing.

## 7-2 AUDIO RECORD LEVEL ADJUSTMENT

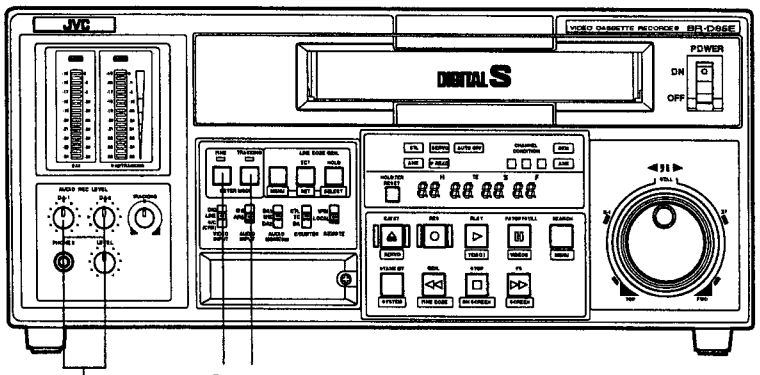


**AUDIO REC LEVEL** control

**Notes**

- The audio record level in the Standby mode can be adjusted in the EE mode.
  Set menu switch No. 355 PB/EE SEL STANDBY to EE (0).
  Factory setting: PB(1)
- The audio signal during recording or audio level adjustment can be monitored through the rear panel AUDIO MONITOR OUT connector or through the front panel PHONES jack.

**Only the analog audio signal recording level can be adjusted. The recerding level of digital audio signals cannot be adjusted. If you want to input digital audio signals to the BR-D80E, you must install the optional SA-D88U.**

**1. Set the DA2/TRACKING meter for audio level.**

- When the TRACKING indicator is off, the meter can serve as a DA2 audio level meter.
- When the TRACKING indicator is on, press the right METER MODE button.

→ The TRACKING indicator goes out indicating that the DA2 audio level meter is active.

**2. Adjust DA1 and DA2 audio levels with the AUDIO REC LEVEL control.**

- For finer level adjustment, press the left METER MODE button.

→ The FINE indicator lights and the audio level meter shows more precise audio levels.

Level meter in the Normal mode

Level meter in the Fine mode

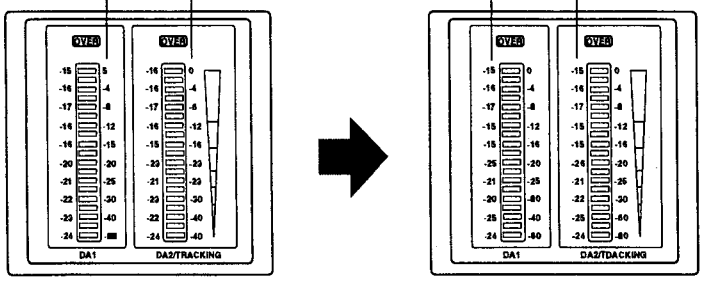


- When the input level is over the normal value, the **OVER** indicator lights. Adjust the level so that the **OVER** indicator goes out.

## 7-3 BASIC RECORDING OPERATIONS

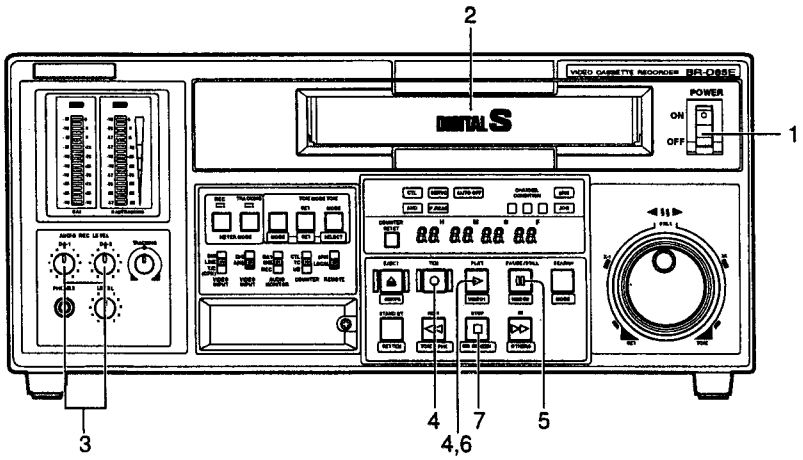


**Notes**

- Be sure to use only **DIGITAL S** cassette tapes. VHS/S-VHS cassettes cannot be used.
- Recording a colour bar signal
  Set menu switch No. 111 REC SIGNAL SELECT to INTERNAL COLOR BAR (1). A colour bar from the built-in signal generator is recorded.
- Recording a wide picture (16:9) ID signal
  Select with menu switch No. 103 WIDE ASPECT ID REC.
  AUTO: Records the ID if the ID signal is received through the YC input connector.
  WIDE: Records the ID regardless whether the ID signal is present in the YC input or not.
  NORMAL: ID is not recorded even if the ID signal is received from the YC input connector.

1. **Turn the POWER switch ON.**
2. **Load the csssette.**
   Make sure that the protective slide on the cassette is set to **REC**.
   → The tape is loaded and the **STANDDY** button lights.
3. **Adjuat the audio signal recording level.**
   (See page 46 fer audio recording level adjustment.)
4. **Start recording.**
   Press the PLAY button while pressing the **REC** button.
   → The **REC** and **PLAY** button indicators light and recording starts.
5. **To temporarily stop recording**
   Press the PAUSE/STILL button.
   → The **PAUSE/STILL** button lights and recording is paused.
5. **To re-start recording**
   Press the PLAY button.
   → The **PAUSE/STILL** button goes out and recording starts again.
7. **To end recording**
   Press the STOP button.
   → The **REC** and **PLAY** button indicators go out and the tape stops.

The Standby ON mode is automatically engaged when the tape ends.
- When menu switch No. 312 AUTO REW is ON (1), the tape is automatically rewound to the beginning.

* When the Play mode is switched to the E-E mode, the picture slightly shifts downward for a moment. However, the recording is not affected.

* Even if the frame is advanced periodically in the Record-Pause mode (every 5 minutes or so), the mode will still disengage after about 20 minutes to protect the heads and the VCR will automatically enter the Standby-Off mode.

If menu switch No. 351 "PRE READ" is set to "ON", the Record mode cannot be engaged. For recording, set it to "OFF". (BR-D85E only)

# 7-4 AUDIO EMPHASIS FUNCTION

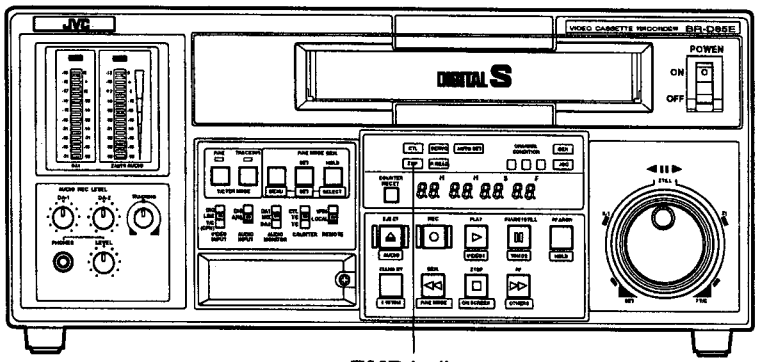


**EMP** indicator

You can record and play back the emphasis information contained in digital audio signals (playback only with BR-D50E). When using models other than the BR-D85E, you must install the optional digital interface board (SA-D80U or SA-D50U).
The EMP indicator shown on the above shows whether or not digital audio signals being recorded or played back are emphasized audio signal data. When the EMP indicator lights during recording, input digital audio signals are recorded as emphasized audio signals.
From the LINE OUT (analog audio signal) connector, the emphasized audio signals are output after their characteristics are de-emphasized (flat).

Note:
Keep the following points in mind when insert editing is executed for digital audio input signals with emphasis on (with EE signal, the "EMP" LED lights up on the front panel).
If the audio source tape was recorded with emphasis off, the "EMP" LED goes off when the tape is played back.
Do not execute insert editing on one audio channel (DA1 or DA2) only. This results in a different Emphasis On/Off setting for each channel and may affect the clarity and quality of the reproduced sound or output digital sound.

# 8 PLAYBACK

## 8-1 PREPARATION FOR PLAYBACK

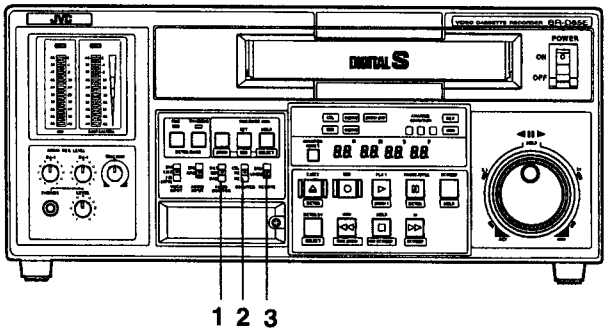


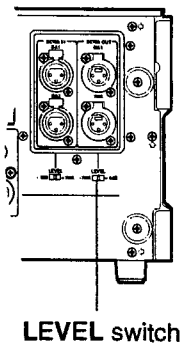


### Front panel switch setting

1. **Select the audio signal to output through the rear panel AUDIO MONITOR OUT connector or through the front panel PHONES jack with the AUDIO MONITOR switch.**

2. **Set the tape counter.**
   Select time data to be displayed on the counter display or on-screen display with the COUNTER switch.

3. **Select remote or local operation.**
   Set the REMOTE switch to LOCAL to use the main unit. Set to 9PIN to use an RS- **422** serial remote control unit.

### Rear panel awitch aetting

4. **Select the audio output level at the AUDIO OUT cennector (-6 dB or + 4 dB).**

### Menu switch setting

Set the menu switches as required.

- **On-screen items**
  - On-screen ON/OFF... No. 500 ON-SCREEN DISPLAY Page 41
    Factory setting: ON (1)
    On-screen data are output through the VIDEO MONITOR OUT.

- **Tracking adjustment selection**
  - Select AUTO or MANUAL ... No. 005 AUTO TRACKING Page 32
    Factory setting: AUTO (1)

- **Error correction selection**
  ... No. 112 ECC MODE Page 33
  Factory setting: NORMAL (0)
  Corrects errors in digital signal processing.

- **Auto Rew mode selection**
  •Automatically rew from tape end
  ...No.312 AUTO REW Page **36**
  Factory setting: OFF (0)

- **Auto Play mode selection**
  •Automatic play from the tape start
  ... No. 311 AUTO PLAY Page 36
  Factory setting: OFF (0)

## 8-2 BASIC PLAYBACK OPERATIONS

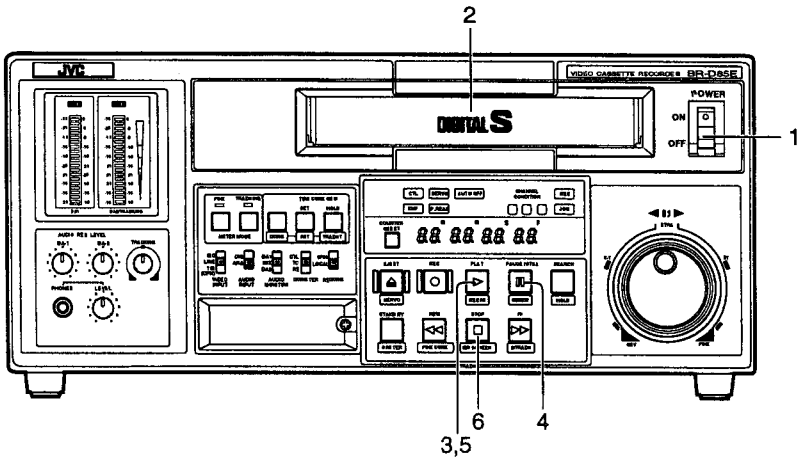


**Notee**

Masking the video signal vertical blanking period
If menu switch No. 601 V. BLANK MASK set to ON (1), the signal superimposed on the vertical blanking period will not be output. However, VITC will be output.

Tracking adjustment
For manual tracking adjustment, set the menu switch No. 005 AUTO TRACKING to MANUAL (1).

Output picture setting in the Standby ON mode
Perform this setting with menu switch No. 355 PB/EE SEL STANDBY. Set to EE to output the input signals. When this is set to "PB", you can monitor input signals by pressing the [REC] button.
When menu switch No. 111 REC SIGNAL SELECT to INTERNAL COLOR BAR, colour bars are output.

* Even if the frame is advanced periodically in the Still mode (every 5 minutes or so), the mode will still disengage after about 20 minutes to protect the heads and the VCR will automatically enter the Standby Off mode.

1. **Turn the POWER switch ON.**

2. **Load the cassette.**
   → When the tape is loaded, the **STANDBY** button lights to indicate that the Standby ON mode has been engaged.
   * Be sure to use only **DIGITAL S** cassette tapes. VHS/S-VHS cassettes cannot be used.

3. **Start playback.**
   Press the PLAY button.
   → The **PLAY** button indicator lights and playback starts. The SERVO indicator lights and the picture stabilizes.
   If menu switch No. 005 AUTO TRACKING is set to ON (1), tracking is automatically adjusted. As a result, it takes several seconds for the picture to stabilize after the [SERVO] indicator lights.The [SERVO] indicator blinks until the servo stabilizes.

4. **To temporarily stop playback**
   Press the PAUSE/STILL button.
   → The **PAUSE/STILL** button lights and the Still mode is engaged.

5. **To re-start playback**
   Press the PLAY button.
   → The **PAUSE/STILL** button goes out and playback resumes.

6. **To stop playback**
   Press the STOP button.
   → The **STOP** button indicator goes out and the tape stops.
   In this state, the head drum is rotating in the Standby ON mode. Still pictures can be played back with memory switch No. 352 PB/EE SELECT set to PB.
   When the STANDBY button is pressed, the **STANDBY** button goes out and the Standby OFF mode is engaged. Head drum rotation stops.

The Standby ON mode is automatically engaged when the tape ends. If menu switch No. 312 AUTO REW is ON (1), the tape is automatically rewound to the beginning.

**To monitor input signal during playback**
The input signal (both video and audio) can be monitored for as long as the REC button is kept pressed during playback.
**Please note that the Record mode is engaged if the PLAY button is preased together with the REC button.**

## 8-3 MANUAL TRACKING AJUSTMENT

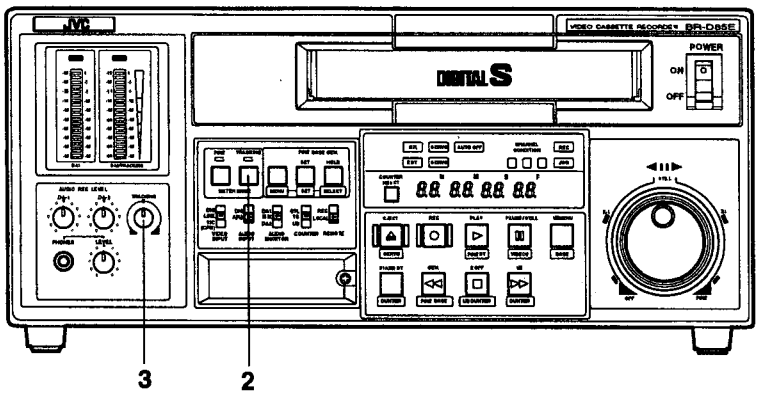


This unit is equipped with an automatic tracking facility which operates during playback to maintain optimum tracking (with menu switch No. 005 AUTO TRACKING set to AUTO (1)).
With some tapes, noise may still appear — particularly if the tape was recorded on a different VCR. In this case, manual tracking adjustment is also possible.

1. **Set menu switch No. 005 AUTO TRACKING to MANUAL (0).**

2. **Set the DA2/TRACKING meter for tracking.**
   Press the right METER MODE button.
   → The TRACKING indicator lights when the meter is switched to Tracking mode.

3. **Adjust until the tracking meter level reaches the maximum.**

The Auto Tracking mode can be restored by setting menu switch No. 005 AUTO TRACKING to AUTO (1).

## 8-4 ERROR CORRECTION

Error correction of digital playback signals is performed with the error correction circuit and the error conceal circuit.

**Error correction circuit** : Errors in playback data caused by dropouts or mis-tracking are corrected using the results of the data operation.

**Error conceal circuit** : Major errors that the error correction circuit cannot correct are concealed with the previous frame data.

Switching the setting of menu switch No. 112 "ECC MODE LEVEL" turns the error correction circuit ON/OFF.
The relationship between the menu setting and error correction operation is shown in the table below.

| Menu setting | Error correction circuit | Error conceal circuit |
|---|---|---|
| NORMAL | o | o |
| NO CONCEAL | x | o |
| NO CORRECTION | x | x |

o : Activated
x : Deactivated

- Normally set to "NORMAL".
- Turning part or all of the error correct circuit OFF allows you to compare noise levels and check the head service life. For comparison, play back a moving picture.
  For example, when switching between "NORMAL" and "NO CONCEAL" shows a big difference in picture quality, it indicates that the error conceal circuit works and that a major error has occurred. In this case, **the heads may no longer be serviceable and should be replaced.**

# 8-5 SHUTTLE SEARCH/JOG OPERATION

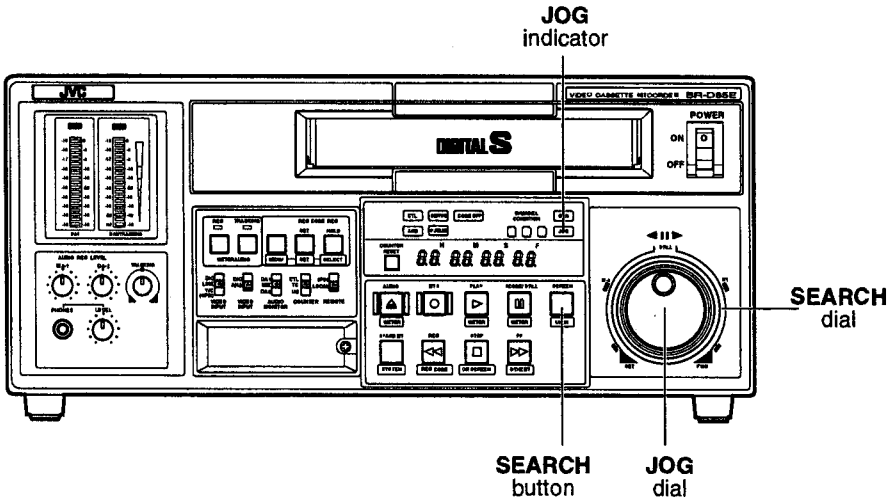


**Notes**

- Selecting modes in which Shuttle Search can be engaged.
  With menu switch No. 300 DIRECT SEARCH
  When set to OFF (0), Shuttle Search starts only when the SEARCH button is pressed.
  When set to ON, Search can start from any mode except REC and REC Pause mode.

- Maximum Search speed
  With menu switch No. 340 SEARCH SPEED to 17 (1) the maximum search speed is X17 at this setting.

- Slow Picture mode
  With menu switch No. 119 SLOW PICTURE
  FRAME (0): Slow-motion frame play-back
  FIELD (1): Slow-motion field playback

- When a cassette is inserted or the power is turned on, a black screen is output in the Still mode. Once the Play or Search mode is engaged, a normal picture is output.

Rapid visual search can be performed with either of two concentric dials; the outer one serving as a shuttle search dial and the inner one as a jog dial.

- Audio recorded on the tape's longitudinal cue track is output during shuttle search and jog operation.

### Shuttle search control

**1. Turn the outer dial in the Play/Still/Stop/FF/REW modes.**

Turn the dial to FWD (clockwise) to search in the forward direction and to REV (counterclockwise) to search in the reverse direction.

→ Search starts. Search speed changes as given below in both forward and reverse directions depending on how far the dial is turned.

Center (STILL) 0→1/30→1/15→1/10→1/5→1/2→ 1 (1st click)→2→4→ 6→ 10 (2nd click)→X32

- The Still mode is engaged when the dial is set at the center still click position. Play speed is X1 (normal) at the first click position in both forward and reverse directions. The maximum search speed can be selected with the menu switch No. 340 SEARCH SPEED.Noiseless playback is available from about -0.3x to +0.3x.

**2. To stop search operation**

Press PLAY, STOP, FF, or REW depending on which mode is to be engaged next.

→ The selected mode is engaged. There is no change in the dial position. When the SEARCH button is pressed, search operation starts at the speed corresponding to the current position of the dial.

- After a cassette is loaded, when the auto tracking function is set to ON and the tape is played back with the Search dial at the x1 position, a stable picture cannot be obtained. If the tape is played back with the [PLAY] button, the picture stabilizes.

### Jog operation

**1. Turn the inner jog dial.**

- Turn the dial in the FWD direction (clockwise) to advance the tape.
  Turn the dial in the REV direction (counterclockwise) to reverse the tape.
  Search speed corresponds to the speed with which the dial is turned [0 (STILL) — X1]
- The Still mode is engaged whenever you stop turning the dial.
- The JOG indicator lights during jog operation.

## 8-6 FF, REW AND COUNTER MEMORY FUNCTIONS

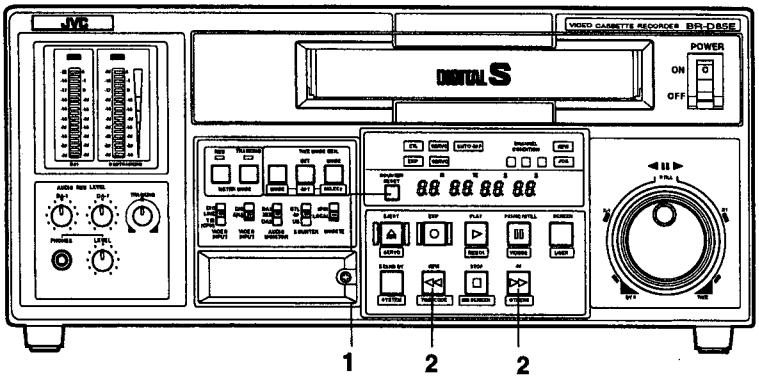


**Notes**

Output mode selection in FF and REW modes

With menu switch No. 356 PB/EE SEL FF/REW

- When set to EE (0), input signals are output for both audio and video.
- When set to PB (1), playback pictures are output.

Auto REW function setting

With menu switch No. 312 AUTO REW

The tape is automatically rewound to the start when it comes to an end in the Play or Record mode.

■ **To faat-forward or rewind the tape**

Press the FF or REW button.

→ The FF or REW button lights and the tape is fast-forwarded or rewound at a speed approximately 60 times faster than normal speed.

■ **Counter memory function**

Nete:
When menu switch No. 330 "AUTO REW" is set to "ON", the counter memory function is disabled during auto rewind.

Setting procedure

- Set menu switch No. 326 COUNTER MEMORY to ON (1).
- Set the front panel COUNTER switch to CTL.

Counter memory operation

1. Specify a tape section to be recalled.
   Press the COUNTER RESET button at the desired section.
   → The counter is reset to 0:00:00:00.
2. Start Counter Search.
   Press the FF or REW button in the Stop mode.
   The tape is fast-forwarded or rewound, automatically stopping at the point where the counter shows 0:00:00:00 (approximately).

## 8-7 REPEAT PLAYBACK

With this function activated, tape playback is automatically repeated when the tape ends.

Setting

- Set menu switch No. 311 AUTO PLAY to ON (1)
- Set menu switch No. 312 AUTO REW to ON (1)

■ Start playback

When the tape ends, it is rewound to the start and automatically begins playback. This procedure is repeated continuously.

# 9 VIDEO EXTRA LINE RECORDING AND PLAYBACK

The DIGITAL S VCR recerds video signal information from line 23 to line 310 and from line 336 to line 622. 2 extra lines are added fer 1 frame. A data added to the V blanking section of input signals is recorded on the tape as an extra line. In the Play mode, this extra line information is added to the video signal for output.

## 9-1 EXTRA LINE DATA RECORDING (BR-D85E/BR-D80E only)

Select the line containing the information to be recorded on an extra line.

1. **Setting the input signal line for extra-line recording**
   Select with menu switch No. 113 EXTRA LINE REC .

| | |
|---|---|
| FIX (0) | Information on input signal line 21 is recorded on extra line-1 and the information on line 22 on extra line-2. |
| USER SETTING (1) | Information on designated input signal lines is recorded on extra lines -1 and -2. Set the lines with menu switches No. 114 and No. 115. |

**Note**
See page 34 for details on menu switches No. 114 and 115.

2. **Selecting an input signal line when USER SETTING (1) is selected in Step 1.**
   - Select a line to be recorded on extra line -1 with menu switch No. 114 EXTRA LINE-1 REC SEL.
   - Select a line to be recorded on extra line -2 with menu switch No. 115 EXTRA LINE-2 REC SEL.

## 9-2 EXTRA LINE DATA PLAYBACK

The menu switches below are used to select whether or not the extra line information should be added to the video signal during playback, and if so, how it should be added.

**1. Select how the extrs line information is to be added to the playback video signal with menu switch No. 116 EXTRA LINE PB .**

| | |
|---|---|
| MUTE (0) | Extra line information is not to be added to the output video signal. (Factory presetting.) |
| AUTO (1) | Extra line information is added to the selected line during extra-line recording for video signal output. |
| AUTO WITH ALIAS (2) | Extra line information is added to the selected line during extra-line recording for video signal output.The same information should be added to the back line (for instance, the back of line 10 is line 322) for video signal output. |
| USER SETTING (3) | Extra line information should be added to the video signal on user-designated lines for playback video output. The two lines can be selected with menu switches No. 117 and No. 118. |

**2. Select a line on which extra line-1 information should be added to the playback video signal when USER SETTING (3) is selected in Step 1.**

- Select a line on which extra line information should be added, with menu switch No. 117 EXTRA LINE PB-1 SEL.
- Select a line on which extra line-2 information should be added, with menu switch No. 118 EXTRA LINE PB-2 SEL.

**Note**
See page 35 for details on menu switches No. 117 and 118.

**Notes on user setting of the external line**
- When menu switch No. 601 V. BLANK MASK is set to ON, the information is not output to the extra line.
- When the user-set external line is superimposed on the setting lines for menu switches No. 400 and No. 401 VITC LINE SELECT, external line information is not output.

# 10 PRE-READ FUNCTION (BR-D85E only)

## 10-1 Editing with the pre-read function

The pre-read function makes it easy to add A/B roll editing-style wipes and fades even when using only one player. Pre-read works by reading out the image at the recording start position just before recording starts during editing. Special effects can then be added to the read-out picture which is then recorded at its original position together with the incoming material. And because both sources (the player and recorder) can handle moving pictures, you'll be able to achieve smooth, natural and professional looking special editing effects.

Feature Comparison of Pre-Read with Conventional A/B Roll Editing.

| | Conventional A/B roll editing system | Pre-read A/B roll editing system |
|---|---|---|
| Configuration | 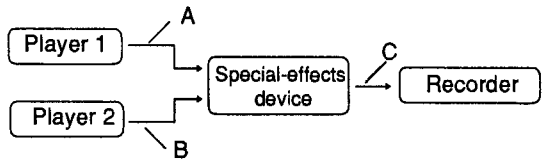 | 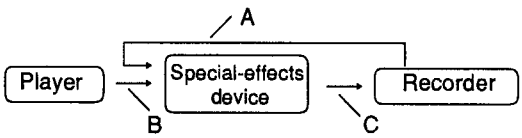 |
| Source material | Source material is on two tapes.<br>One tape is played back by each player. | Source material is obtained from the player's playback picture and the pre-read picture.<br>Material from the recorder can be obtained automatically. |
| Picture with effects | Moving picture (two players) | Moving picture<br>(picture from one player and pre-read picture from the recorder) |
| Editing operation | Edit point settings required for two players and one recorder. | Edit point settings required for one player and one recorder. |
| Wipe and mix effects, etc. | 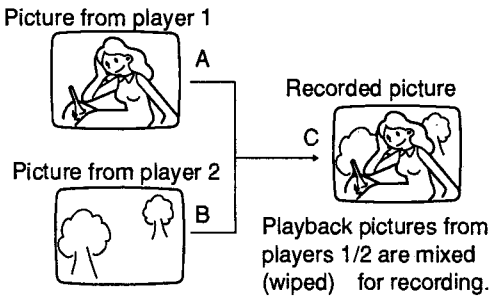 | 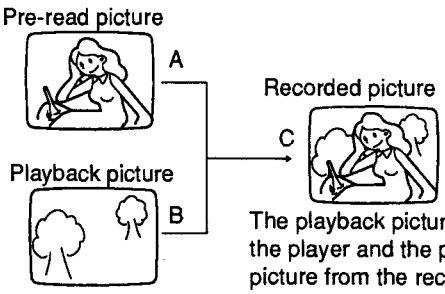 |

## 10-2 Example of editing system configuration

An example of a pre-read editing system is shown below.

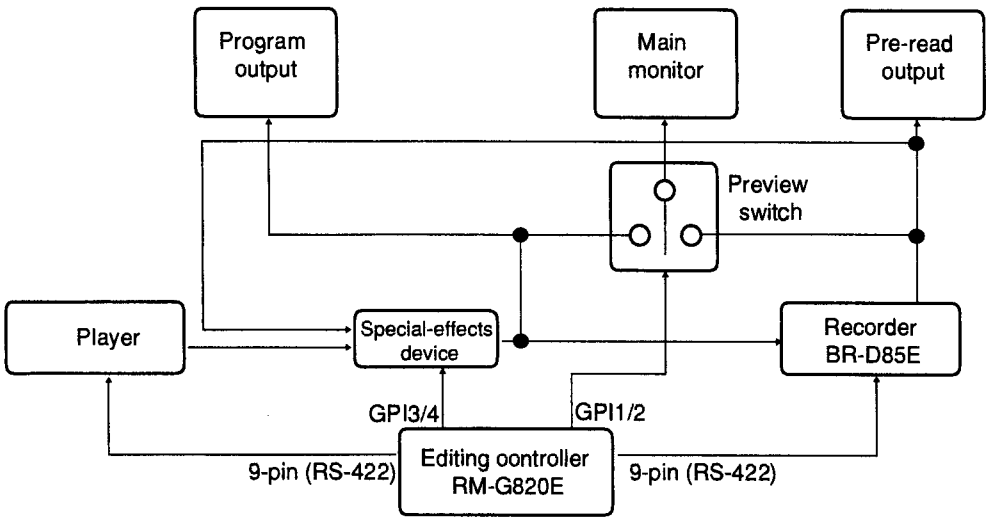


- Input a Y/C or component video signal to the BR-D85E (recoder VTR ) for pre-read editing. LINE input signals cannot be used for pre-read editing.
- Preview switcher
  Automatically switches the signal shown on the main monitor in conjunction with editing controller operation.
- Enables editing without separate monitors for program output and pre-read output.
  When using an editing controller provided with the pre-read function, it is not necessary to set menu switch No. 351 PRE READ of the BR-D85E to ON (1).
  Usable controller: RM-G820E

Note:
- When editing with the pre-read function, the material on the tape in the recorder is replaced with the special-effects pictures. If you want to keep the original material, be sure to back up the original tape.
- Pre-read editing is only possible with video signals.
- When video phase shifting is obvious in video signals inserted for pre-read editing, set menu switch No. 110 "VIDEO PHASE" to "VARIABLE" and adjust it with the [VIDEO PHASE] volume control behind the front cover.
- If the editing controller is not provided with the pre-read function, set menu switch No. 351 PRE READ of tho recorder BR-D35E to ON (1).

# 11 HOW TO USE TIME CODE

Time codes and user bits can be recorded and played back as time data.
The time code area on the tape is divided into the main time code sector used for time data for editing and the sub time code sector which can be used for optional recording of time code.

## 11-1 TIME CODE DISPLAY

**Notes**
- On-screen display data are output through the rear panel VIDEO MONITOR OUT connector. (When menu switch No. 500 ON-SCREEN DISPLAY is set to ON (1))
- The on-screen display position can be moved with menu switches No. 501 and 502.

To display selected time data on the counter display and the on-screen display during playback or recording.

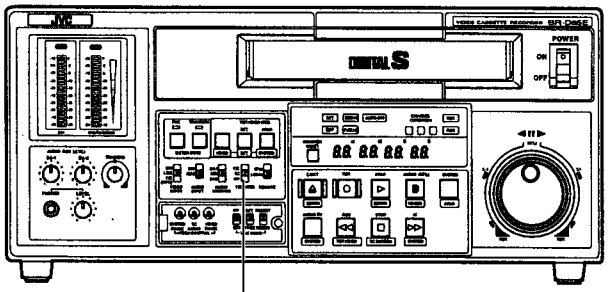

**[COUNTER] switch**

■ Set the COUNTER switch to TC or UB.

TC: Displays time code data.
UB: Displays user bits.

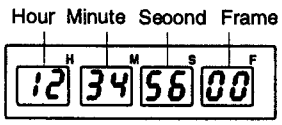


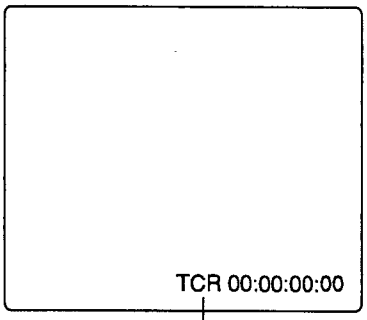


TCR: Time code reader data
TCG: Time code generator data
UBR: User bits reader data
UBG: User bits generator data
TCR • : CTL (control) signal interpolation mark

Time code mode display

### Sub time code data display

Sub time code, marked with "SUB", is displayed under the main time code on the on-screen display.

- Sub time code is shown when:
  - sub time code is output to the VITC output (with menu switch No. 451 VITC OUT SELECT set to SUB TC (0))

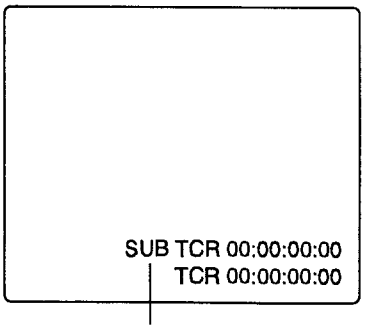


SUB: Sub time code

## 11-2 TIME CODE INITIAL SETTING (PRESET) (BR-D85E/BR-D80E only)

The BR-D85E/BR-D80E includes a built-in time code generator so that initial values can be set as desired for the time code and user bits.

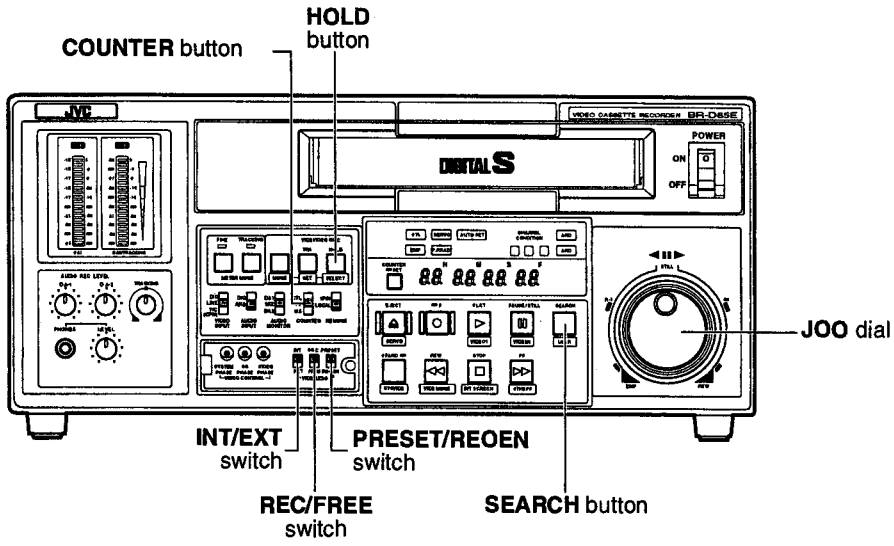


Setting

**Front panel switches for time code setting**

- Set the PRESET/REGEN switch to PRESET.
- Set the REC/FREE switch as desired.
  REC: Time code only runs in the Record mode.
  FREE: Time code runs continuously.
- Set the INT/EXT switch to INT.
- Select the Counter Display mode by setting the COUNTER switch to TC or UB.

Procedure

1. Engage the Time Code Generator Preset mode.
   Press the HOLD button.
   → The first digit on the counter display blinks.

2. Set the value for the blinking digit by turning the JOG dial while pressing the SEARCH button.
   → The value of the blinking digit changes. Use the hexadecimal (0-9, A-F) for user bits.

3. Shift the digit by turning the JOG dial.
   → The blinking digits shift to the next one.

## 11-2 TIME CODE INITIAL SETTING (PRESET) (BR-D85E/BR-D80E only)

**Note**
Time code data starts running as soon as presetting is finished if the front panel FREE/REC switch is set to FREE.

To cancel a setting, press the [HOLD] button before the [SET] button has been pressed.

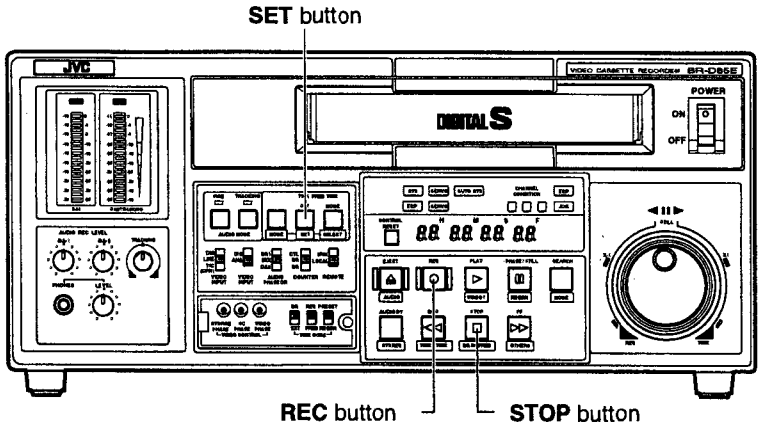


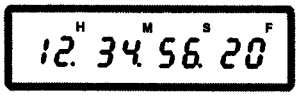


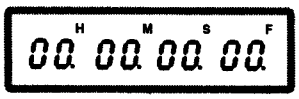


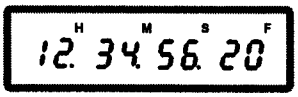


4. **Set desired values for all digits.**
   Repeat steps 2 - 3.

5. **Preeetting is completed by pressing the SET button.**

   → The selected data are preset in the built-in time code generator. When preset is finished, the normal on-screen and counter displays are restored.

Te check the values set in the time code generator, After unloading the tape or engaging the Stop mode, press the REC button.

→ The values are displayed by prssing the REC button.
**Pressing the STOP button restores the normal display mode.**

# 11-3 TIME CODE RECORDING (BR-D85E/BR-D80E only)

There are two different ways of recording time code or user bits; recording the data output from the built-in time code generator and recording externally generated time code or user bits.

## Recording time code data output from the built-in time code generator

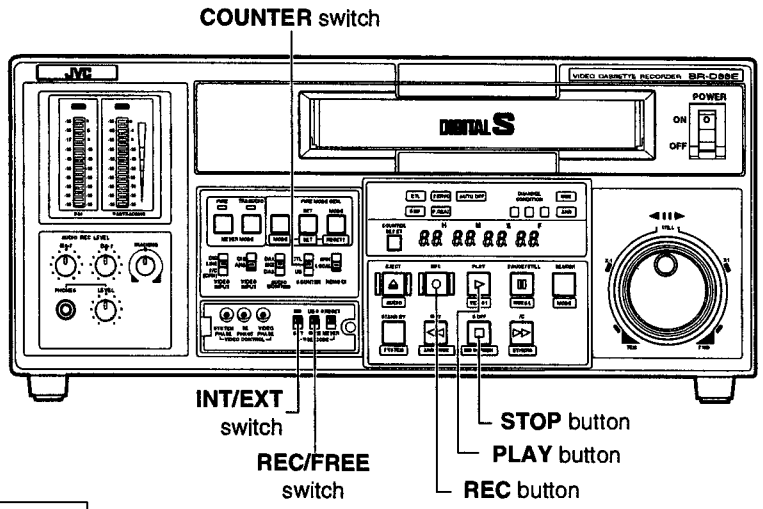


Setting

① **Front panel switch setting**
INT/EXT switch: Set to INT.
REC/FREE switch: Set to REC or FREE.
PRESET/REGEN switch: Set to PRESET or REGEN.
COUNTER switch: Set to TC or UB.

② **Menu switch setting**

- Menu switch No. 403 REGEN MODE: Set as desired.
- Menu switch No. 450 SUB TC (VITC) REC

When set to OFF (0): "00:00:00:00" is always recorded on the sub timecode.
When set tc ON (1): Input VITC is recorded in the sub time code.
Factory setting: ON (1)

Procedure

1. Press the REC button in the stop mode and check the value of the built-in time code generator.
   → The data value stays on display when the REC button is pressed.
   •Press the STOP button to restores the normal display mode.
2. Record the time code and user bits.
   → Press the PLAY button while pressing the REC button.
   • TCG or UBG is shown on the on-screen counter display.
3. To stop recerding, press the STOP button.

## 11-3 TIME CODE RECORDING (BR-D85E/BR-D80E only)

### Recording the time code data output from the external time code generator

Externally generated time code can be recorded as it is or after being regenerated with the time code data output from the built-in time code generator.

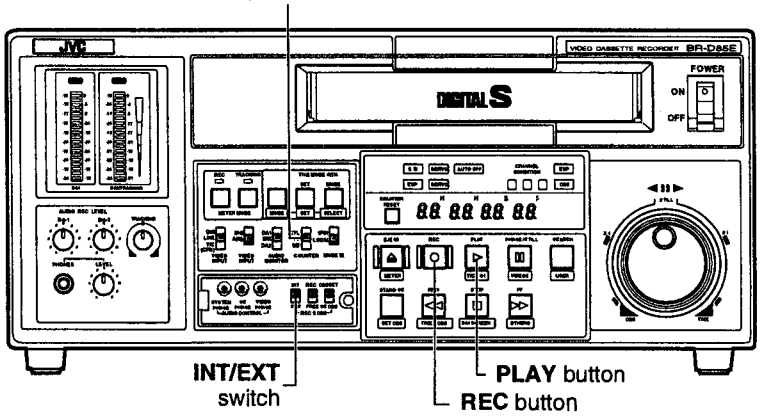


**1. Front panel switch setting**

① Select the External Time Code Generator mode by setting the INT/EXT switch to EXT.

② Select the Counter Display or On-screen Display mode by setting the COUNTER switch to TC or UB.

**2. Menu switch setting**

① Select the type of time code to be regenerated with the external time code.

- Menu switch No. 403 REGEN (Initial setting: TC&UB (0))

  TC&UB (0): Regenerates both time code and user bits.
  TC (1): Regenerates time code only.
  UB (2): Regenerates user bits only.

② Select the external time code to be regenerated.

- Menu switch No. 409 EXT REGEN TC (Initial setting: LTC (0))

  LTC (0): Regenerates the LTC time code input through the rear panel TC IN connector.Input LTC time code should be regenerated (matched in terms of sync and phase) with video signals. Make sure you input an external sync signal to the feeding equipment.
  VITC (1): Regenerates the VITC time code superimposed on the video signal input through the rear panel VIDEO IN connector.

③ Select the sub time code.

- Menu switch No. 450 SUB TC (VITC) REC (Initial setting: ON(1))

  OFF (0): "00:00:00:00" is always recorded on the sub timecode.
  ON (1): Records the input VITC time code in the sub time code.

**3. Record the time code.**

Press the PLAY button while pressing the REC button.
→ The selected time code will be recorded.

- Regenoration operation
  During external time code recording, the time code generator continues running even when the regenerated time code input stops. In the Play mode, time code regeneration is based on the playback time code value.
- Inserting time code
  If only time code data is being inserted, record it on the main time code. It is not possible to insert it in the sub time code.

## 11-4 TIME CODE PLAYBACK

Time code is output through the rear panel TC OUT and VIDEO OUT-LINE connectors during playback. VITC timo code with the time code data superimposed on the video signal is output through the VIDEO OUT-LINE connector. Sub time code is output through the VIDEO OUT-LINE connector as VITC time code. Only the main time code is output through the TC OUT connector.

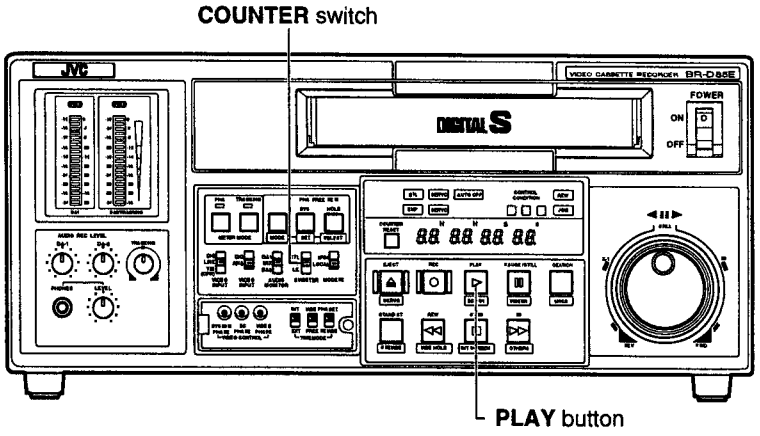


Setting

**1. Front panel switch setting**

- Select a Counter Display mode by setting the COUNTER switch to TC or UB.

**2. Menu switch setting**

① For VITC time code output, select a line to be added to the video signal (for main time code only).

- With menu switch No. 400 VITC-1 SELECT (Initial setting: 19 (12) LINE)
- With menu switch No. 401 VITC-2 SELECT (Initial setting: 21 (14) LINE)

② Select VITC time code output through the VIDEO OUT connector.
With menu switch No. 451 VITC OUT SELECT

SUB TC (0): Outputs the VITC time code recorded in the sub time code.
TC (1): Outputs the time code recorded in the main time code.
Factory setting: TC (1)

- On-screen display of sub time code
  Sub time code is displayed with the main time code when menu switch No. 451 VITC OUT SELECT is set to SUB TC (0).

③ Select the Time Code Output mode during search.
Menu switch No. 452 SEARCH LTC

OFF (0): Outputs time code through the [TC OUT] connector during search at X1.

ON (1): Outputs time code through the [TC OUT] connector during search at all speeds. Continuous time code is not available.

**3. Play back the time code.**

Press the PLAY button.

→ The selected time code is played back.
TCR or UBR is shown with the on-screen time code data.

- LTC time code is output from the TC OUT connector.
- VITC time code is output from the VIDEO OUT connector.
- Main or sub time code selected with menu switch No. 451 VITC OUT SELECT is superimposed on video signals and output to the line selected with menu switch No. 400 and No. 401 from the [VIDEO OUT] connector

# 11-5 SUB TIME CODE RECORDING AND PLAYBACK

In addition to the main time code used for editing, this unit can also record (and play back) an optional sub time code in the time code data area on the tape.

## Recording sub time code (For BR-B85E/BR-B80E only)

- In the sub time code sector, you can record either the same data as in the main time code or the VITC time code received through the VIDEO IN connector.

**Notes**
- When menu switch No. 450 is set to ON (1)
  The sub time code is regenerated with the VITC signal superimposed on the video signal from the VIDEO IN connector.

**1. Select data to be recorded on the sub time code.**
- Menu switch No. 450 SUB TC (VITC) REC
  OFF (0): "00:00:00:00" is always recorded on the sub timecode.
  ON (1): Records the VITC received from the VIDEO IN connector on the sub time code.
  Initial setting: ON (1)

**2. Record the sub time code.**
Press the PLAY button while pressing the REC button.
The selected time code will be recorded.

## Play back the sub time code.

- Sub time code data is output through the VIDEO OUT connector as a VITC time code signal superimposed on the video signal.

- TC OUT connector output
  No sub time code data is output through the rear panel TC OUT connector. Only main time code is output from this connector.

**1. Enable sub time code playback.**
- Set menu switch No. 451 VITC OUTSEL to SUB TC (0).
  Factory setting: TC (1)

**2. Play back the sub time code.**
Press the PLAY button.
→ Sub time code data is output through the VIDEO OUT connector as a VITC time code signal superimposed on the video signal.
Sub time code data (indicated with SUB) is shown with the main time code on the on-screen display.

## Time Code Signal Flow

Time code data flow depends on the setting of the menu switch or the [INT/EXT] switch.
Use this as a reference for switch setting.

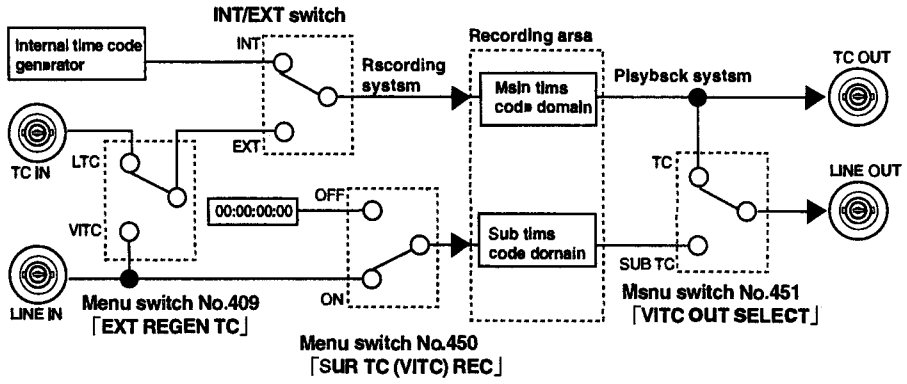

## 11-6 TIME CODE SWITCH SETTING FOR EDITING

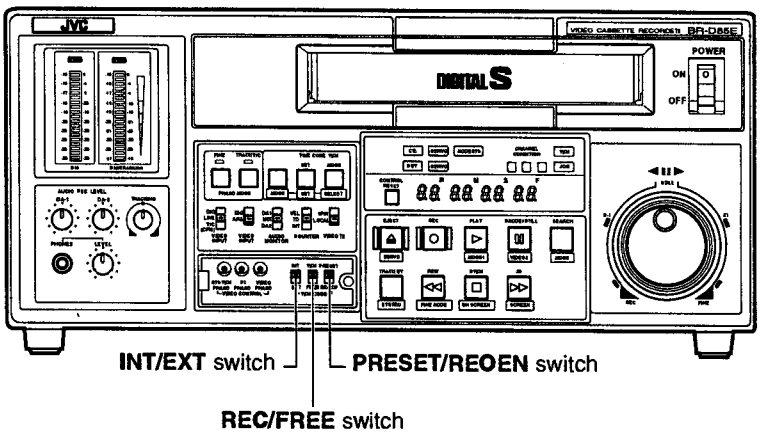


- **Set the switches on the BR-D85E/BR-D80E (recording VCR) as follows.**

  Front panel switch setting

  - INT/EXT switch: Set to INT.
  - REC/FREE switch: Set to FREE.
  - PRESET/REGEN switch: Set to PRESET.
  - Set the menu switches as required.

**Note**
If there is no external sync signal generator available, sond a video input signal to the VIDEO REF IN connector on the recording VCR.

- **Send an external sync signal to the VIDEO REF IN connector for editing.**

  Deliver a black burst or a standard color signal as an external sync signal.

# 12 EDITING SYSTEM PHASE ADJUSTMENT

To ensure accurate, error-free editing with an AB roll editing system or any other multiple-unit system, you must adjust the phase of the built-in time base corrector (TBC) after connecting all system components.
Phase adjustment must be updated each time ycu replace a connection cable, add or replace one of the units, or make any other changes.

## 12-1 CONNECTION

Connection

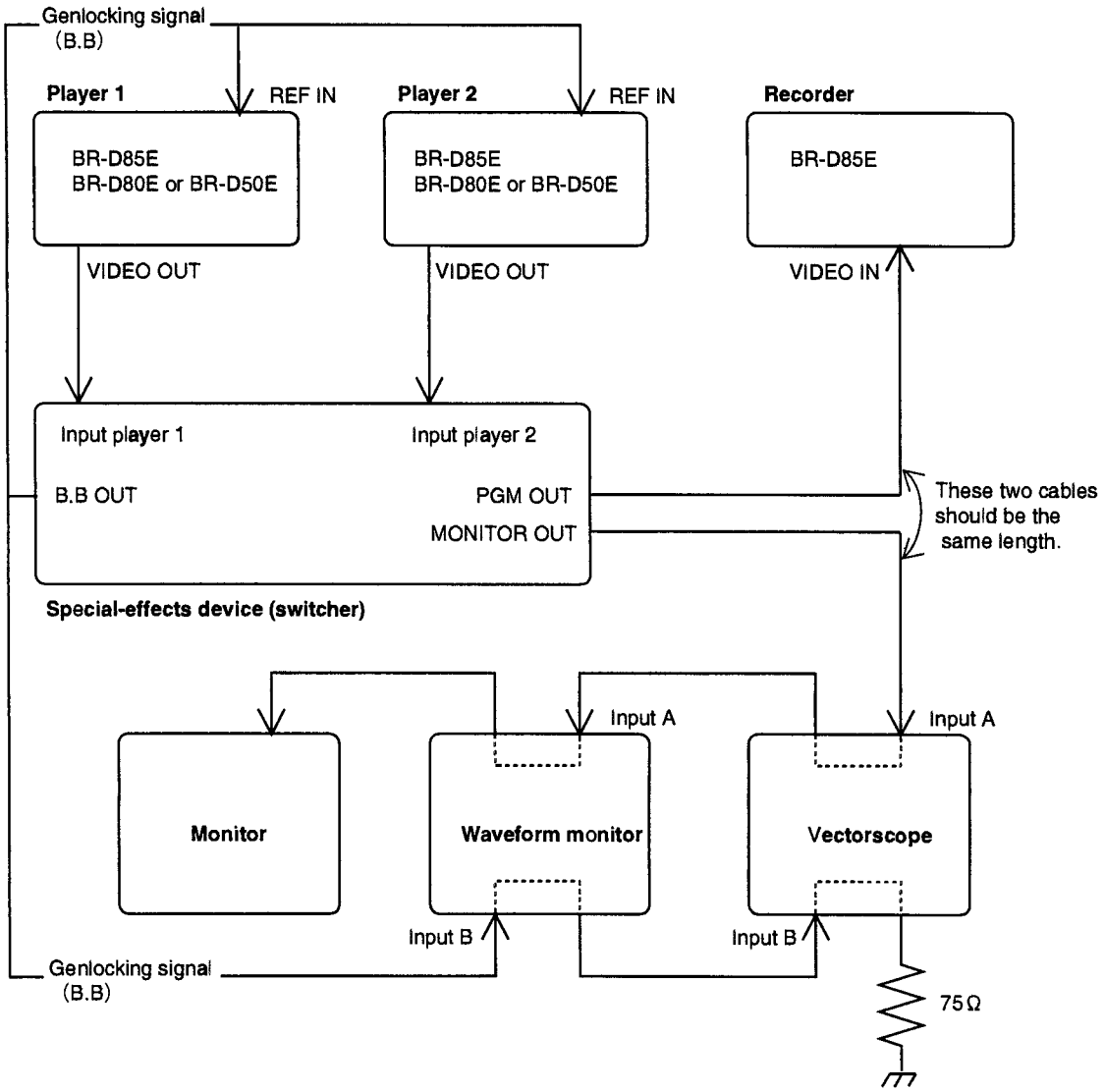


① Send external reference sync signals from the sync signal generator to the system components.

② Composite video signals are delivered as video signals.

* When editing on directly connected VCRs without a switcher, adjustment of system and subcarrier phases is not necessary.

## 12-2 UNIT-BY-UNIT AJUSTMENT

Color deviation occurs on the recording VCR when the players have different video levels, chroma levels, chroma phases and setup levels. Adjust these levels on each of the players separately. This can be done with the optional RM-G22JX TBC remote control unit.

**1. Play back a cassette tape with standard color signals recorded on it.**

**2. Adjust the knobs so that the displays on the waveform monitor (WFM) and the vectorscope (VSC) appear as illustrated below.**

■ Waveforms on the WFM

A: Video level
Adjust to 0.7Vp-p.

■ Waveforms on the VSC

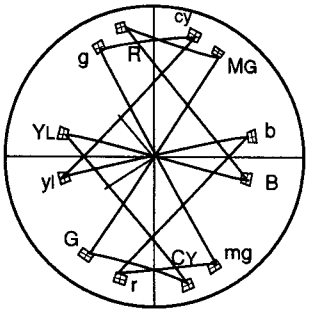


C: Chroma level/phase
Adjust the two knobs so that the lighting point of each vector waveform is located within the ⊞ mark.

# 12-3 PHASE AJUSTMENT

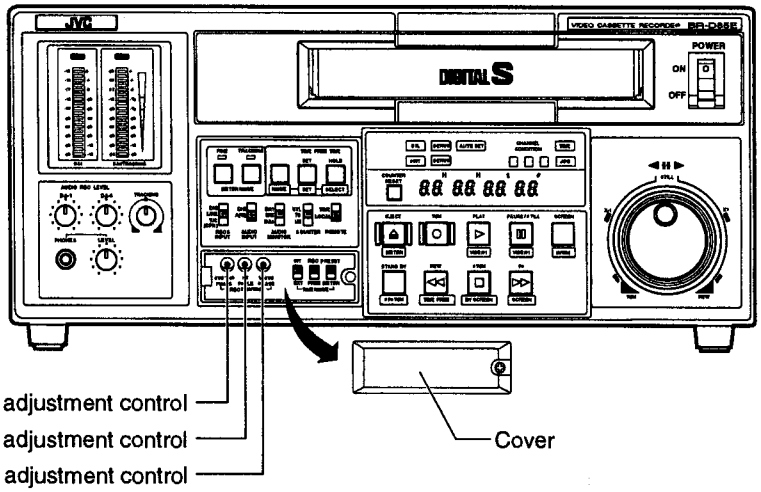


Preparation

- Remove the front cover with a Phillips screwdriver.
- To adjust the video phase, set menu switch No. 110 VIDEO PHASE to VARIABLE (1).

Perform subcarrier phase adjustment after the system phase has been adjusted.

### System phase (SYSTEM PHASE) adjustment

System phase adjustment matches the VCR's blanking phase with the switcher's correct blanking phase. Switch between the switcher reference signal and the input VCR signal and adjust until there is no change in phase position. Without this adjustment, video distortion occurs after completion of fading during switching.

Waveforms on a waveform monitor
The WFM enlarges in 0.1 µsec.

Fig.

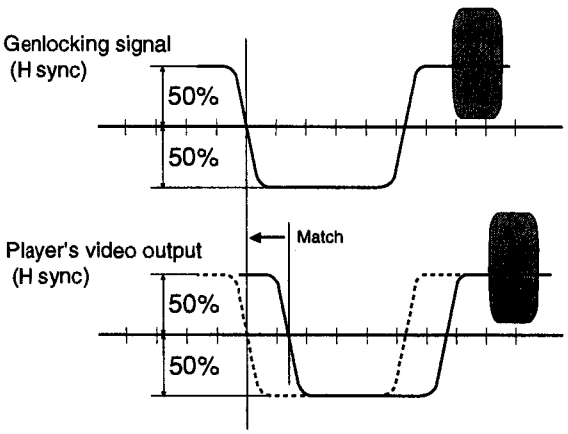


(Pay attention to sync fall)

**Phase setting for genlocking signal**

1. Set the waveform monitor (WFM)'s input to B and synchronize with input B. Set the H sync position with the WFM's H POSITION volume control to 50% of the H sync level. (Refer to the upper figure on the left.)

**Adjustment of Player 1**

2. Select Player 1 with the special-effects device (switcher).
3. Play back the reference color bar on Player 1.
4. Set the WFM's input to A and synchronize with input B. Set the [SYSTEM PHASE] volume control of Player 1 to the same H sync position as step 1 by turning it with a minus screwdriver. (Refer to the lower figure on the left.)

**Adjustment ef Pleyer 2**

5. Select Player 2 with the special-effect device (switcher).
6. Repeat steps 3 and 4 to adjust the system phase of Player 2.

# 12-3 PHASE AJUSTMENT

## Subcarrier Phase (SC PHASE) Adjustment

System subcarrier phase adjustment matches the VCR subcarrier with the reference subcarrier of the switcher. Adjust so that the reference subcarrier overlaps the VCR subcarrier.

Waveforms on the vector scope

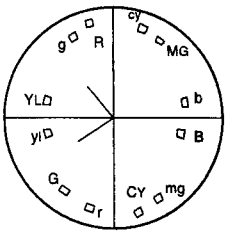


Fig. 1

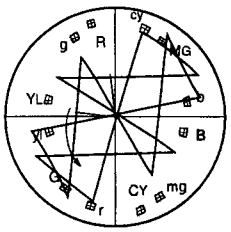


Fig. 2

**Phase setting for genlocking signal**

1. Set the vector scope's input to B and synchronize with input B. Adjust the phase of the burst signal to the reference line with the vector scope

**Adjustment of Player 1**

2. Select Player 1 with the special-effects device (switcher).
3. Play back the reference color bar on Player 1.
4. Set the vector scope's input to A and synchronize with input B. Adjust the phase of a burst signal to the reference line by turning the [SC PHASE] volume control of Player 1 with a minus screwdriver. (Refer to Fig. 2 on the left.)

**Adjustment of Player 2**

5. Select Player 2 with the special-effects device (switcher).
6. Repeat steps 3 and 4 to adjust the subcarrier of Player 2.

* ● Adjustment of the KM-D600 switcher is not necessary as it is self-adjusting.
* ● Adjustment of the KM-3000 switcher is not necessary as it is a component switcher.

## Video phase (VIDEO PHASE) adjustment

The video phase determines where a picture is located with respect to the sync signal. You can adjust this using the same waveform monitor used for system phase adjustment. Set the WFM reference sync to INT and adjust while observing blanking until no part of the VCR picture is missing in the rising section.
If you're not using a waveform monitor, wipe the picture with the switcher reference signal and adjust until the entire picture can be seen on the monitor.

Fig.

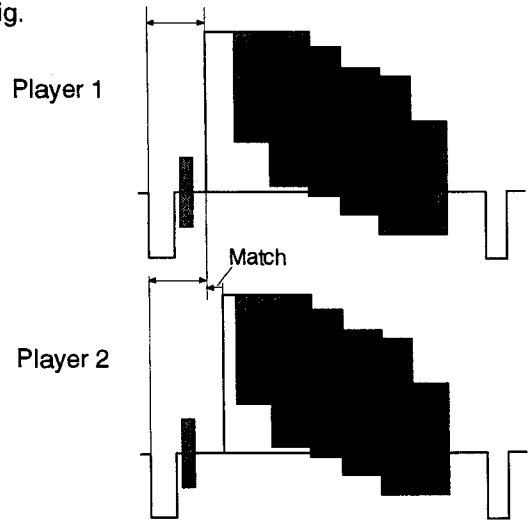


(WFM: Inside reference sync signal)

1. Set menu switch No. 110 "VIDEO PHASE" to "VARIABLE (1).

**Adjustment of Player 1**

2. Select Player 1 with the special-effects device (switcher).
3. Play back the reference color bar on Player 1.
   * If a reference color bar is not available, play back recording of a color bar.
4. Set the WFM's input to A and synchronize with input A. Adjust the video phase by turning the [VIDEO PHASE] volume control of Player 1 with a minus screwdriver so that none of the image is missing. (Refer to the upper figure on the left.)

**Adjustment of Player 2**

5. Select Player 2 with the special-effects device (switcher).
6. With the WFM's input set to A and input A synchronized, adjust the video phase by turning the [VIDEO PHASE] volume control of Player 2 with a minus screwdriver in the same way as step 4. (Refer to the lower figure on the left.)

# 13 TROUBLESHOOTING

## 13-1 WARNINGS WITH INDICATORS

This machine features self-diagnostic circuitry which allows it to detect and report any malfunctions that may occur. When a malfunction is detected, the cause will be shown on the monitor display and on the VCR's counter display. The warning code system consists of a main code (the code number) and a sub code (verbal description), e.g. 02 1 CONDENSATION ON DRUM. The front panel AUTO OFF indicator will normally be illuminated.

* When the AUTO OFF indicator is illuminated, the unit is no longer operable. The AUTO OFF indicator can be canceled by turning the power off and on again. If the indicator remains lit even after turning the power off and on, malfunctions other than 02 1 are possible. Consult your local JVC dealer.

Warning messages on the on-screen display

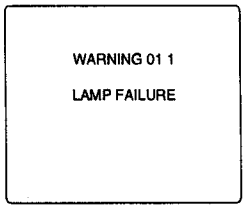


Warning messages on the counter display

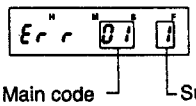


**Refer to "1.8 WARNiNO DETECTiON CiECUiT" in Page, 1-24 of tha aarvice manual**

As this unit uses a microcomputer, it may not function correctly due to noise from outside or interference noise. In this case, unplug the power cord and plug it again. Then, check the operation.

| Warning ccde | On-acraan diapiay | Warning coda informaticn | Bahavior and actiona to be taken |
|---|---|---|---|
| 01 1 | LAMP FAILURE | Tape sensor LED broken. | Behavior: Stops, with no operation possible.<br>Action: Turn the power off and then on. |
| 02 1 | CONDENSATION ON DRUM | Condensation on drums. | Behavior: Cassette ejeoted and drum begins to rotate. When condensation is eliminated, the indicator goes out and cassette can be loaded.<br>Action: Leave the power ON and wait until the waraning message goes out. |
| 06 1 | INVALID ERROR | S-VHS/VHS cassette in use. | Behavior: Cassette ejected.<br>Action: Use Digital-S cassette tape. |
| 08 1 | SUP TENSION FAILURE | Tape tension abnormal. | Behavior: Stops, with no operation possible.<br>Action: Turn the power off and then on. |
| 32 1 to 32 2 | FAILURE IN LOADING | Tape loading not possible. | Behavior: Cassette ejected.<br>Action: Load the cassette again. |
| 33 1 to 33 2 | FAILURE UN LOADING | Tape unloading not possible. | Behavior: Stops, with no operation possible.<br>Action: Turn the power off and then on. |

# 13-1 WARNINGS WITH INDICATORS

| Warning code | On-scrssn display | Warnincods information | Behavlor and actions to be taken |
|---|---|---|---|
| 41 1 | CASSETTE EJECT FAILUR | Cassette does not come out in Eject. | Behavior: Stops, with no operation possible.<br>Action: Turn the power off and then on. |
| 56 1 to 56 7 | TAPE DEFECTIVE | Tape defect.<br>Tape loose | Behavior: Cassette ejected.<br>Action: If no abnormality is found in tape, reload the cassette. |
| 57 1 to 56 7 | END LEADER DETECTION | Tape end sensor abnormal. | Behavior: Tape is rewound. If tape end is still detected 3 seconds later, cassette is ejected.<br>Action: Reload the cassette. |
| 58 1 to 58 2 | BEGIN LEADER DETECTION | Tape beginning sensor abnormal. | Behavior: Tape is fast-forwarded. If tape begin is still detected 3 seconds later, cassette is ejected.<br>Action: Reload the cassette. |
| 70 1 | DRUM MOTOR FAILURE | Drum stops motion. | Behavior: Stops, with no operation possible.<br>Action: Turn the power off and then on. |
| 71 1 | CAPSTAN MOTOR FAILURE | Capstan stops its motion. | Behavior: Stops, with no operation possible.<br>Action: Turn the power off and then on. |
| 72 1 to 72 6 | SUP REEL MOTOR FAILURE | Supply reel motor motion abnormal. | Behavior: Stops, with no operation possible.<br>Action: Turn the power off and then on. |
| 73 1 to 73 5 | TU REEL MOTOR FAILURE | Takeup reel motor motion abnormal. | Behavior: Stops, with no operation possible.<br>Action: Turn the power off and then on. |

If there are any abnormalities when the self-diagnostics run after the power is turned on, the following warning indications are shown. Self-diagnostics are executed when menu switch No. 357 "DIAG AT POWER ON" is set to "ON". The waming code is shown in 6 digits. " x " mark shows unspecified.

**Refer to "1.8 WARNING DETECTIGN CIRCUIT" in Pege, 1-31 of the service manual.**

| | | | |
|---|---|---|---|
| 80xxxx | CPU BUS FAILURE | Signal communication between VCR's micro-processors abnormal. | Behavior: Only warning indicator is active.<br>Action: Consult your local JVC dealer. |
| 81xxxx | 12C BUS FAILURE | Signal communications in VCR abnormal. | |
| 820100<br>820300 | EEPROM FAILURE | EEPROM signal communication in VCR abnormal. | |
| 83xxxx | PWB MISSING | Incomplete PC board installation. | |
| 840100 | SYSCON REF FAILURE | System controller reference signal failure. | |
| 850100 | MECHA.SERVO REF FAILURE | Mechanical controller reference signal failure. | |
| 860100 | TC REF FAILURE | Time code reference failure. | |
| 900100 | DCI RET. FAILURE | Abnormal digital video bus. | |
| 91xxxx | DIGI I/O FAILURE | * Abnormal serial digital video signal. | |
| 92xxxx | DIGI AUD IN FAILURE | * Abnormal serial digital audio signal. | |
| C0xxxx | MECHA(NO TAPE) FAILURE | *1 Abnormal mechanical operation. | |

On-screen display

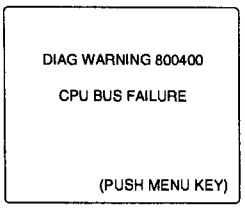


When the MENU button is pressed, the indication goes out.

* Serial digital signals are used in conformity with SMPTE259M for video and with AES/EBU for audio.

*1 If the C00200 indicator appears when the power is turned ON it means that condensation has occurred. Press the [MENU] button until the indicator goes out. Once the indicator has gone out, you can operate the unit as usual.

## 13-2 TROUBLES NOT TO BE WARNED BY INDICATORS

| Symptoms | Cause | Action |
|---|---|---|
| Not operable | • REMOTE switch set to 9 PIN<br>• Menu switch No. 002 OPERATION LOCK set to ON<br>• Menu setting mode entered | • Set REMOTE switch to LOCAL.<br>• Set Menu switch No. 002 OPERATION LOCK to OFF.<br>• Press MENU button to restore normal mode. |
| Not recordable | • Protective slider on the cassette not at REC<br>• Menu switch No. 351 PRE READ is set to ON. (BR-D85E only) | • Set cassette's protective slider to REC.<br>• Set menu switch No. 351 PRE READ to OFF. (BR-D85E only) |
| Playback impossible | • S-VHS/VHS cassette in use | • S-VHS/VHS cassette not acceptable |
| On-screen display does not oome up | • Monitor not connected to VIDEO MONITOR OUT<br>• Menu switch No. 500 ON-SCREEN DISPLAY set to OFF | • Connect monitor to VIDEO MONITOR OUT.<br>• Menu switch No. 500 ON-SCREEN DISPLAY to ON |
| Component input signal not recordable | • Menu switch No. 109 VIDEO INPUT set to Y/C | • Set Menu switch No. 109 VIDEO INPUT to CPN. |
| YC443 input signal not recordable | • Menu switch No. 109 VIDEO INPUT set to CPN | • Set Menu switch No. 109 VIDEO INPUT to Y/C. |
| Noise appears on part of the playback picture. | • Menu switch No. 005 AUTO TRACKING set to OFF.<br>• Menu switch No. 112 ECC MODE set to NO CONCEAL or NO CORRECTION | • Set Menu switch No. 005 AUTO TRACKING to ON.<br>If noise appears when set to ON, set to OFF and perform manual tracking adjustment.<br>• Set Menu switch No. 112 ECC MODE to NORMAL. |
| Tape counter does not run. | • CTL counter does not run on a non-recorded section of the tape as no CTL signal is recorded on such a section.<br>• Counter is in Menu switch setting mode. | • Press MENU button and enter Tape counter mode. |
| Tape stops during FF or REW running. | • When Menu switch No. 326 COUNTER MEMORY is set to ON, CTL counter stops near 0:00:00:00. | • Set Menu switch No. 326 COUNTER MEMORY to OFF. |
| Tape is ejected. | • S-VHS/VHS cassette tape is used. | • S-VHS/VHS cassette cannot be used. |
| Menu setting cannot be changed. | • Menu switch No. 00D MENU LOCK is set to ON. | • Set menu switch No. 00D MENU LOCK to OFF. |

# 14 APPENDIX

## 14-1 OPTIONAL ACCESSORIES

### Rack Mount Adapter SA-K67U

SA-K67U is a rack mount adapter used to mount the BR-D85E, BR-D80E and BR-D50E on a 19" EIA standard rack.

■ **Mount rail & bracket**

When mounting the unit on a rack with the SA-K67, a mount rail and mount bracket are also required.
Recommended models:

- Acuryde Co., Ltd. 2038-22 (mount rail)
  BK2038 (bracket)

■ **Installation**

1. Secure the rack mount adapter to the VCR with 6 M4 screws.
2. Secure the slide rail inner member to the VCR with 6 M4 screws.
3. Mount the slide rail outer members on the front and rear ends of the rack using the bracket.
4. Pull out the rails in the slide rail outer members until you hear a click.
5. Fit the right and left slide rails on the VCR into the pulled-out rails and push them in together. The rails will be blocked by right and left springs, so press the springs with your fingers and push the VCR further in.

**Precautions**

- Do not use screws 8 mm or longer to secure the rack mount adapter and slide rail inner members to the VCR, as doing so may damage the printed circuit boards inside the VCR.
- The handle on the rack mount adapter is only for sliding the VCR in and out. Do not lift the VCR with this handle.
- When installing the VCR in a rack, make sure there is sufficient clearance above and below the VCR for heat radiation.
- Some racks may require that you mount the slide rails in a particular way. If you have any questions, consult the rack dealer.

### RM-G22JX TBC Remote Controller

To adjust the TBC in the BR-D85E, BR-D80E and BR-D50E.

### YC Video Cables

The following cables are available for Y/C443 video signal connection.

| Model | Units for connection | | |
|---|---|---|---|
| | Output | Input | Length |
| VC-G30U | 4-pin | 4-pin | 3 m |
| VC-G50U | 4-pin | 4-pin | 5 m |
| VC-G3030 | 4-pin | 7-pin | 3 m |
| VC-G2030 | 7-pin | 4-pin | 3 m |
| VC-G2050 | 7-pin | 4-pin | 5 m |

# 15 SPECIFICATIONS

| | | BR-D85E | BR-D80E | BR-D50E |
|---|---|---|---|---|
| ● General | | | | |
| Format | | Digital S | | |
| Tape width | | 12.65 mm | | |
| Tape speed | | 57.795 mm/sec | | |
| Signal format | | PAL-Standard | | |
| Dimensions | | 429 (W) x 188 (H) x 567 (D) mm | | |
| Weight | | Approx. 22 kg | Approx. 22 kg | Approx. 21 kg |
| Power consumption | | 830 mA | 800 mA | 600 mA |
| Power supply | | AC 220 V – 240 V 50/60 Hz | | |
| Record/Play time (w/DS-104) | | (Record/Play) Approx. 104 min. | | (PLAY) Approx. 104 min. |
| REW/FF time (w/DS-104) | | Approx. 3 min. | | |
| Operating temperature | | 5 to 40°C | | |
| Storage temperature | | –20 to 60°C | | |
| Operating humidity | | 30% to 80%RH | | |
| ● Video signal | | | | |
| Input | Composite<br>YC 443<br>Component<br>Serial digital | 1 Vpp 75 ohms, unbalanced<br>Y:1Vp-p/C:0.3 Vp-p 75 ohms, unbalanced<br>Y:1Vp-p /R-Y, B-Y:0.7 Vp-p 75 ohms, unbalanced<br>Conformity with SMPTE259M 75 ohms, unbalanced<br>270Mb/sec | | — |
| Output | Composite<br>YC 443<br>Component<br>Serial digital | 1Vp-p 75 ohms, unbalanced<br>Y:1Vp-p /C:0.3 Vp-p 75 ohms, unbalanced<br>Y:1Vp-p /R-Y, B-Y:0.7 Vp-p 75 ohms, unbalanced<br>Conformity with SMPTE259M 800mVp-p ±10% 75 ohms, unbalanced 270Mb/sec | | |
| External sync input | | 0.3 Vp-p, 75 ohms, unbalanced | | |
| Sampling frequency<br>Quantization | | Y: 13.5 MHz, R-Y/B-Y: 675 MHz<br>8 bits | | |
| Frequency range | | Y: 0-5.0 MHz +1.0 dB/–6 dB (analog component in/out)<br>R-Y/B-Y: 0-2 MHz +1.0 dB/–1.5 dB | | |
| S/N | | More than 50 dB (analog composite in/out)<br>More than 52 dB (analog component in/out)<br>More than 55 dB (digital in/analog component out) | | |
| ● Audio signal | | | | |
| Input | Line input<br>Digital audio | –6/+4 dBs high impedance, balanced<br>Conformity with AES/EBU 1Vp-p 75 ohms, unbalanced | | — |
| Output | Line output<br>Digital audio | –6/+4 dBs low impedance, balanced<br>Conformity with AES/EBU 1Vp-p 75 ohms, unbalanced | | |
| | Monitor output<br>Headphone | –6 dBs low impedance, unbalanced<br>-∞ to -20 dBs, 8 ohms | | |
| Sampling frequency<br>Quantization | | 48 kHz<br>16 bits | | |
| No. of channels | | 2 | | |
| Frequency response | | 20 Hz to 20 kHz | | |
| Dynamic range | | 85 dB or more | | |
| Wow & Flutter | | Below a measurable value | | |
| ● Time code (LTC) | | | | |
| Input | | 0 ± 6 dBs high impedance unbalanced | | — |
| Qutput | | 0 ± 3 dBs low impedance unbalanced | | |
| ● Aocessories | | Power cable x 1 | | |

## DIMENSIONS

Unit: mm

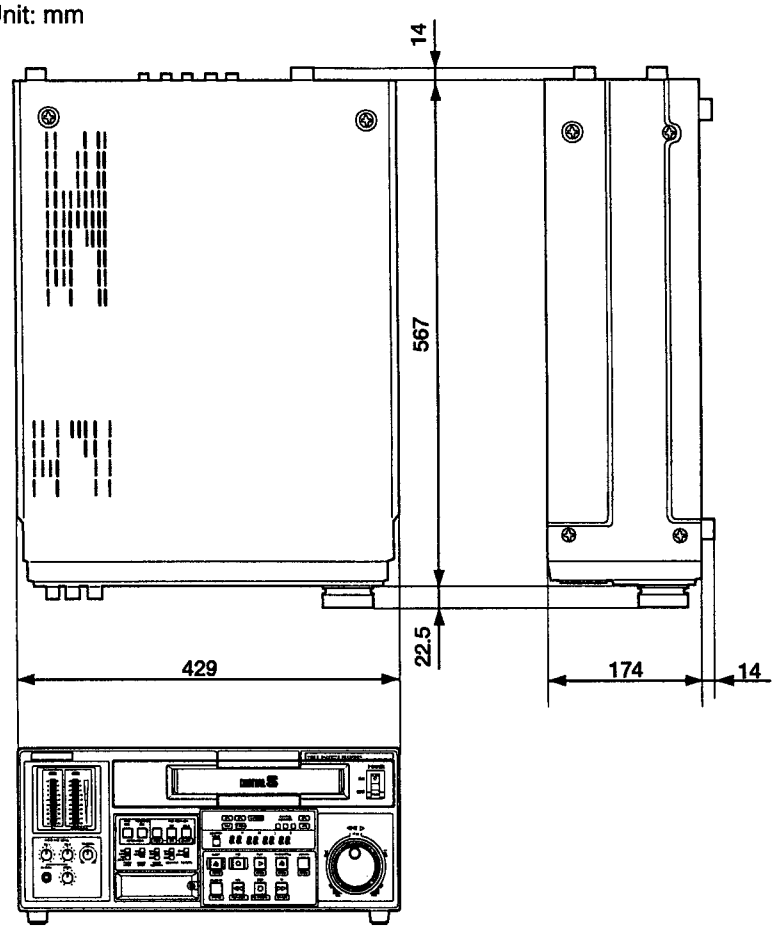


*Design and specifications subject to change without notice.*

**BR-D85E/BR-D88E/BR-D50E**

**VIDEO CASSETTE PLAYER**
**VIDEO CASSETTE RECORDER**

Printed in Japan
SL96076-002

JVC

VICTOR COMPANY OF JAPAN, LIMITED

© 1996 VICTOR COMPANY OF JAPAN, LIMITED

# SECTION 1

# SERVICE CAUTIONS AND DISASSEMBLY

# CONTENTS


1.1 INTRODUCTION TO DIGITAL S FORMAT ..... 1-1
1.1.1 General statement ..... 1-1
1.1.2 DIGITAL S cassette tape ..... 1-2
1.1.3 Recording system and tape format ..... 1-3
1.1.4 Drum assembly ..... 1-5
1.1.5 Video system ..... 1-6
1.1.6 Audio system ..... 1-9
1.2 REMOVING OF OUTER COVERS ..... 1-11
1.2.1 Top cover ..... 1-11
1.2.2 Side cover ..... 1-11
1.2.3 Front panel assembly ..... 1-11
1.2.4 Bottom cover ..... 1-11
1.3 REMOVING OF MAIN P.C. BOARDS ..... 1-12
1.3.1 Removing of board belonging to Group B ..... 1-13
1.3.2 Removing of board belonging to Group C ..... 1-13
1.3.3 Removing of board belonging to Group D ..... 1-13
1.3.4 Removing of board belonging to Group E ..... 1-14
1.3.5 Removing of board belonging to Group F ..... 1-14
1.3.6 Removing of board belonging to Group G ..... 1-14
1.4 EXPLANATION OF INTERNAL SWITCHES ON BOARDS ..... 1-15
1.4.1 Function of each switch ..... 1-15
1.5 MANUAL EJECTION OF CASSETTE TAPE IN AN EMERGENCY ..... 1-16
1.5.1 When tape is in unloading condition: ..... 1-16
1.5.2 When the set is in "AUTO OFF" mode though tape is slack ..... 1-16
1.5.3 When tape is still in loading condition (1): ..... 1-16
1.5.4 When tape is still in loading condition (2): ..... 1-16
1.6 HOUR METER AND VERSION INDICATION ..... 1-17
1.6.1 Outline ..... 1-17
1.6.2 Operation ..... 1-17
1.7 SERVICE MODE ..... 1-18
1.7.1 Outline ..... 1-18
1.7.2 HOW TO OPEN SERVICE MODE ..... 1-18
1.7.3 Setting of SERVICE MENU SWITCHES ..... 1-19
1.7.4 How to store setting of MENU SWITCH ..... 1-21
1.7.5 How to read setting of MENU SWITCH ..... 1-21
1.7.6 How to reset MENU SWITCH to initial setting on shipment ..... 1-21
1.7.7 How to save and read EEPROM data ..... 1-21
1.7.8 How to clear warning records ..... 1-21
1.7.9 How to display warning records ..... 1-21
1.8 WARNING DETECTION CIRCUIT ..... 1-23
1.8.1 Outline ..... 1-23
1.8.2 Teble of warning codes ..... 1-23
1.9 TEST MODE ..... 1-34
1.9.1 How to open test mode ..... 1-34
1.10 SELF-DIAGNOSIS MODE ..... 1-35
1.10.1 How to open self-diagnosis mode ..... 1-35
1.10.2 Explanation of error messages ..... 1-35
1.10.3 OPERATION LED CHECK mode ..... 1-36
1.10.4 OPERATION VR/DIAL CHECK mode ..... 1-36
1.10.5 Self-diagnosis of PV PROCESS circuit ..... 1-36
1.10.6 Self-diagnosis of AUDIO circuit ..... 1-36
1.10.7 LTC LOOP CHECK mode ..... 1-37
1.10.8 VITC LOOP CHECK mode ..... 1-37
1.10.9 Error sub-code indications ..... 1-37
1.10.10 15 : M/S SW POINT CHECK ..... 1-38
1.10.11 11 : M/S TR DATA ..... 1-38

# SECTION 1
# SERVICE CAUTIONS AND DISASSEMBLY

## 1.1 INTRODUCTION TO DIGITAL S FORMAT

With remarkable progresses in LSI technology and digitization technology, the audio-visual field is greeting the advent of the multimedia age. In those oircumstances, every audio-visual company has made proposal concerning new digital VTR with data compression function, non-linear editing system, new technologies for collecting data, editing, data transmission, and so on. Of course, JVC has released "DIGITAL S" format that is developed as a professional digital VTR format for the multimedia age.

### 1.1.1 General etatoment

**1. Outline of DIGITAL S VTR and cassette tape**

The DIGITAL S format provides that high density MP (metal powder) cassette tape is the standard. This cassette is the same as the S-VHS/VHS cassette in size but different in the structure, in short, its dust-proof structure is noticeably reinforced as compared with the S-VHS/VHS cassette and it cannot be inserted into S-VHS/VHS deck.
The mechanism of the DIGITAL S VTR is designed based on the professional S-VHS deck (S800, S22 series, etc.), and the improved tape travel system realizes maximum 104-minutes recording at the tape travel speed of 57.795 mm/sec.
The rotational frequency of the drum is 4,500 rpm, and its 2-track parallel recording system splits video data to record data for 1 frame on 12 tracks. Recording on a track is performed at an azimuth of ±15° for controlling crosstalk with neighboring tracks. The editing VTR (BR-D85E/D80E) is equipped with flying erase heads to realize fine editing at a unit of frame.
The S-INRZI/24-25 modulation system is adopted for modulating recording signal. Regarding recording density, track pitch is 20 µm, minimum recording wavelength is 0.587 µm, and recording frequency is 49.5 MHz. For error correction system, the Read-Solomon product coding is used for demonstrating satisfactory correction ability. Moreover, the paired-head construction of the DIGITAL S VTR assures high reliability because either of paired heads can substitutionally plays back data for the other if one of a pair breaks down.
For tracking servo, control signals (1 pulse for 1 frame) on the linear track is used as same as professional S-VHS decks.

**2. Main faatures of DIGITAL S VTR**

1) High quality picture produced by component digital compression recording system
   - High density recording is realized by newly developed 1/3.3 low rate data compression system.
   - 8-bits (4:2:2 components) quality picture

     The DIGITAL S VTR is excellent in reproducing detail portion of image besides its merits of good S/N ratio, frequency characteristic and pulse characteristic. Moreover, the digital recording system not only hardly deteriorates picture quality regardless of repeated dubbing but also maintains the original performance for a considerably long time.

2) High quality Audio by digital 4-channel PCM recording

   **In the case of BR-D50, BR-D80 and BR-D05, only digital 2-channel PCM recording ara available.**

   - 16-bit, 48 kHz digital recording realizes high tone quality.
   - Individual channel insert editing is possible.
     Fine editing and dubbing can be performed with high tone quality owing to excellent editing characteristic of PCM recording.

3) Adoption of high density MP (metal powder) tape
   In spite of the same cassette size as S-VHS/VHS cassette, the high density MP cassette tape and the high density recording system realize long-time recording for 104 minutes at maximum.

4) Wide application for building up various systems
   The DIGITAL S VTR is connectable with all kinds of signal formats currently in use (analog composite, component, Y/C, serial digital signals, etc.), moreover, it is capable of re-editing material tapes that are recorded by conventional systems in the DIGITAL S format.

| VTR format | | DIGITAL S |
|---|---|---|
| Tape | Material | MP(metal powder) |
| | Width | 1/2 inch |
| | Recording system | Component recording, 4:2:2 |
| Video | Data compression | Intra-frame DCT(1/3.3) |
| | Number of bits | B |
| Audio | Number of channels | 4(2: BR-D50/D80/D85) |
| | Number of bits | 16 |
| Track pitch | | 20 µm |
| Tape speed | | 57.795mm / sec |
| Drum diameter | | 62.0mm |
| Cassette size | | 188 x 104 x 25mm |

**Teble 1-1-1(e)**

### 1.1.2 DIGITAL S cassette tape

**1. Specifications of DIGITAL S cassette tape**

The DIGITAL S cassette tape is the same as the S-VHS/VHS cassette tape in size as shown in Fig. 1-1-2(a).

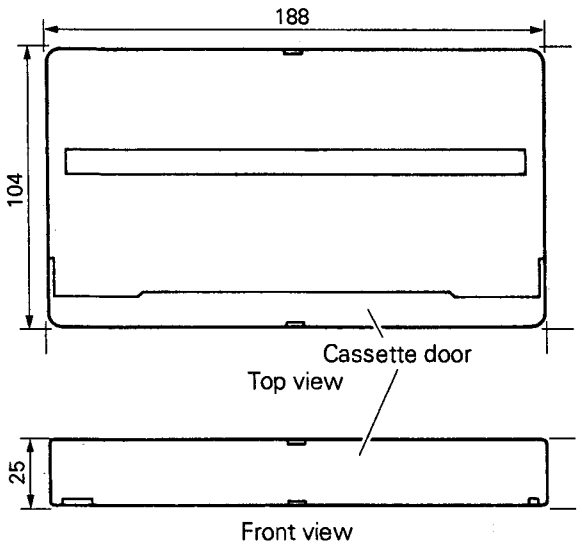


**Fig. 1-1-2(a)**

**2. Main features**

1) High-density metal tape is adopted.
   Adoption of high-density MP (metal powder) tape realizes recording and playback of higher frequency band as compared with ordinary iron oxide tapes (VHS and S-VHS tapes). Moreover, the DIGITAL S cassette tape will be marketed at a more economical price compared with general cassette tapes for the digital VTR.
2) Double lid type dust-proof structure
   Since the tape is sandwiched in the inner lids fitted to the inside of the guard panel (cassette door), the both sides of tape are prevented from getting dust and damaged whenever the cassette tape is in keeping.

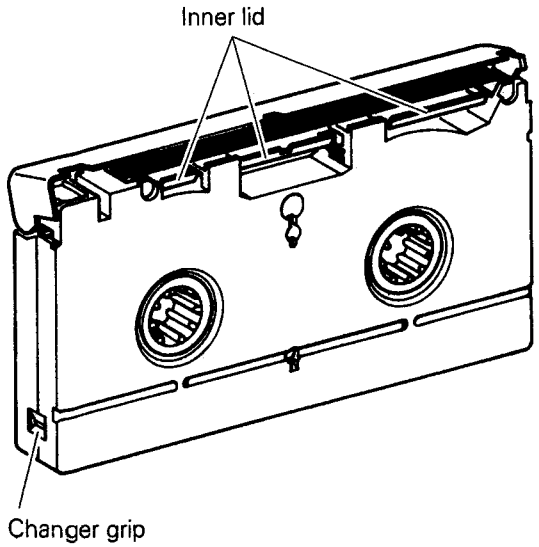


**Fig. 1-1-2(b)**

3) Miserasure prevention by sliding tab
   Differently from the miserasure prevention mechanism of the S-VHS and VHS cassette tapes that need to break the REC safety tab for preventing recording from miserasure, the DIGITAL S cassette tape adopts the sliding tab for miserasure prevention. Therefore, the DIGITAL S cassette tape can repeatedly be used for recording.
4) Cassette discriminating mechanism
   The DIGITAL S cassette tape is discriminated from the S-VHS and VHS cassette tapes by the cassette identification slot. This mechanism prevents insertion of DIGITAL S cassette tape into an S-VHS or VHS VTR.
5) Adoption of changer grip
   The DIGITAL S cassette tape is fitted with a grips for cassette changer in both side of the cassette.

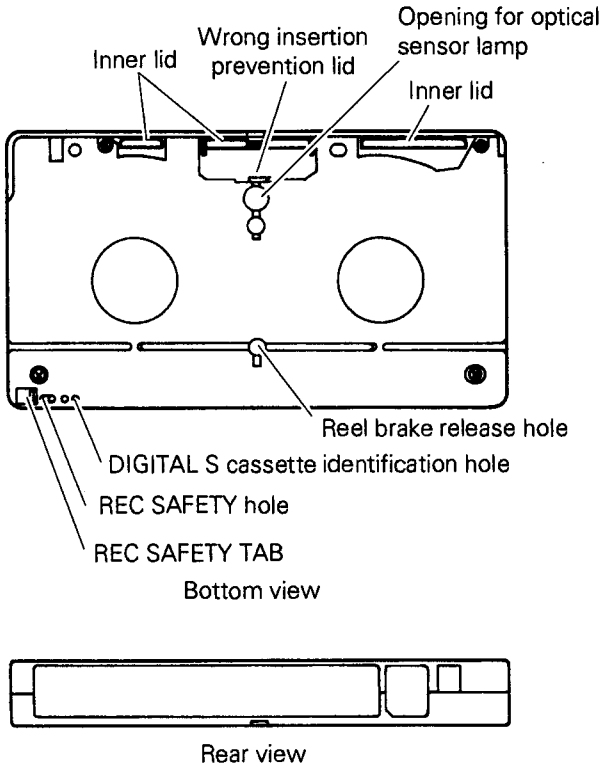


**Fig. 1-1-2(c)**

### 1.1.3 Recerding system and tape formet

**1. Tape pattern**

As viewed from the magnetic side, the tape pattern can be illustrated as Fig. 1-1-3(a).

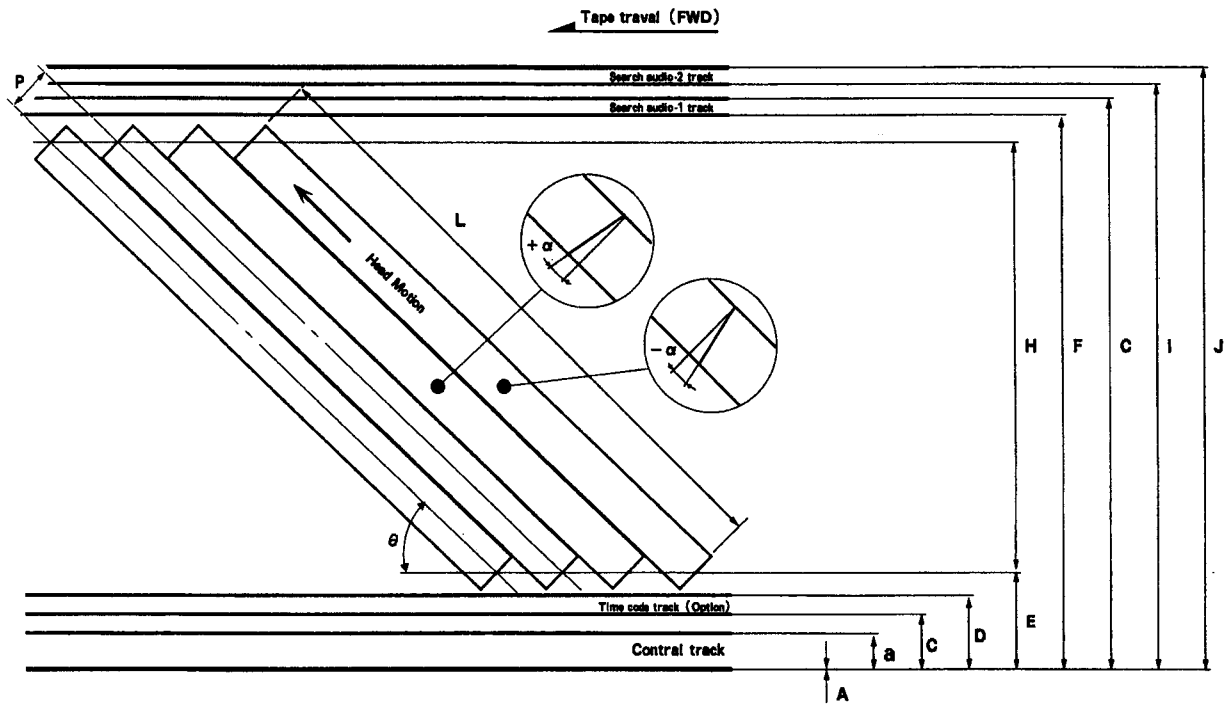


**Fig. 1-1-3(a)**

| | | DIGITAL S | VHS (SP) | Description |
|---|---|---|---|---|
| **A** | Control track lower edge [mm] | 0.000 | 0.00 | CTL signal is recored on linear track as same as VHS tape. (1 pulse for 1 frame) |
| **B** | Control track upper edge [mm] | 0.750 | 0.75 | |
| **C** | Time code track lower edge [mm] | 1.150 | – | Recording of time code (LTC) is possible. (This function is not yet adopted by the BR-D85/D80/D50.) |
| **D** | Time code track upper edge [mm] | 1.550 | – | |
| **E** | Helical track lower edge [mm] | 1.700 | (1.165) | |
| **F** | Search audio-1 lower edge [mm] | 11.050 | 11.65 | For confirming audio signal in Search mode : DIGITAL S<br>For recording normal audio CH-1 (L-ch) : VHS |
| **G** | Search audio-1 upper edge [mm] | 12.000 | (12.00) | |
| **H** | Helical track width [mm] | 9.253 | 10.07 | |
| **I** | Search audio-2 lower edge [mm] | 12.300 | (12.30) | For confirming audio signal in Search mode : DIGITAL S<br>For recording normal audio CH-2 (R-ch) : VHS |
| **J** | Search audio-2 upper edge [mm] | 12.650 | (12.65) | |
| **L** | Helical track total length [mm] | 89.128 | (96.919) | |
| **P** | Helical track pitch [mm] | 20.0 | 49 | |
| **S** | Program start [mm] | 1.770 | – | Standard of helical track height. |
| **W** | Tape width [mm] | 12.650 | 12.65 | |
| **θ** | Track angle [degree] | 5.95892 | 5° 57' 50.3" | |
| **α** | Azimuth angle [degree] | 15.0 | 6 | Extended azimuth for processing wide band signal. |
| **Ts** | Tape speed [mm/s] | 57.795 | 23.39 | |

**Table 1-1-3(a)**

## 2. Track pattarn

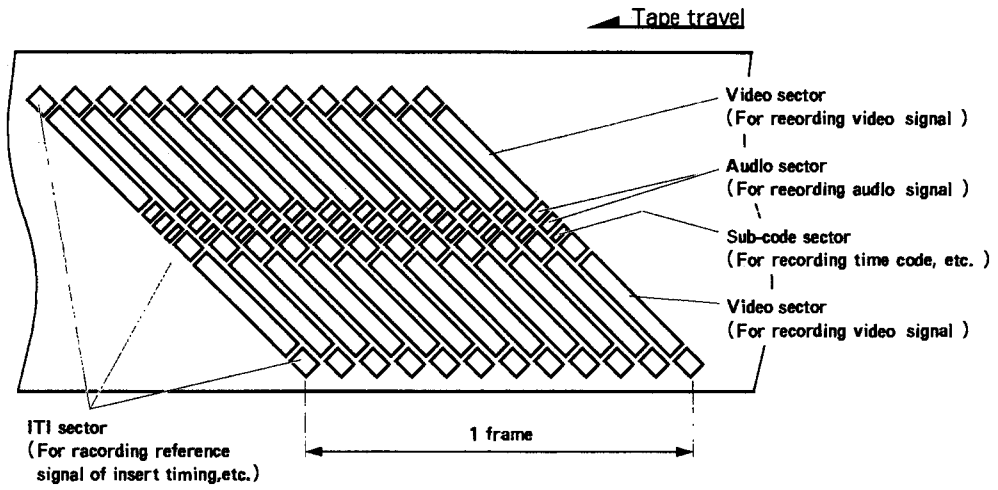


**Fig. 1-1-3(b) Track pattern (1)**

In the DIGITAL S format, one track is divided into eight sectors for recording different information. Three of them are used as the ITI sector, two are used as the audio sector, another two are used as the video sector, and the last one is used as the sub-code sector.
Moreover, there are edit gaps are recorded between respective two sectors for absorbing timing error that possibly occurs in editing.

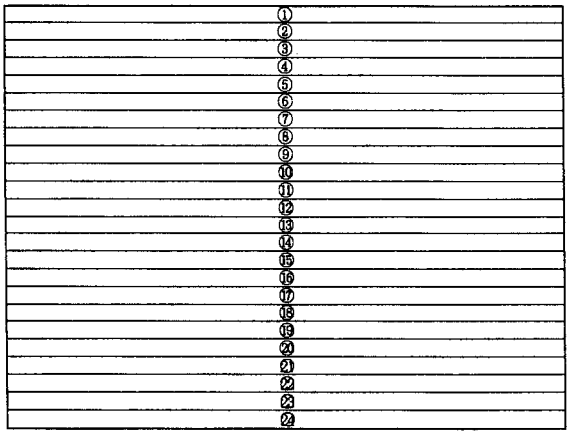

**Fig. 1-1-3(d) The position of video sector on screen**

Fig. 1-1-3(c) shows relation between video sectors of the 625/50 system and positions of video signals to be recorded on those sectors.
As shown in Fig. 1-1-3(c), (d) video signals for 1 frame are divided into twenty four to be recorded on the allotted sectors respectively. For example, if signal of the sector ① of a frame is played back by the + azimuth head of CH1, the same sector of the next frame is played back by the – azimuth head of CH1. If one of paired heads is clogged, the other head catches the signal and the picture is played back by every other frame.

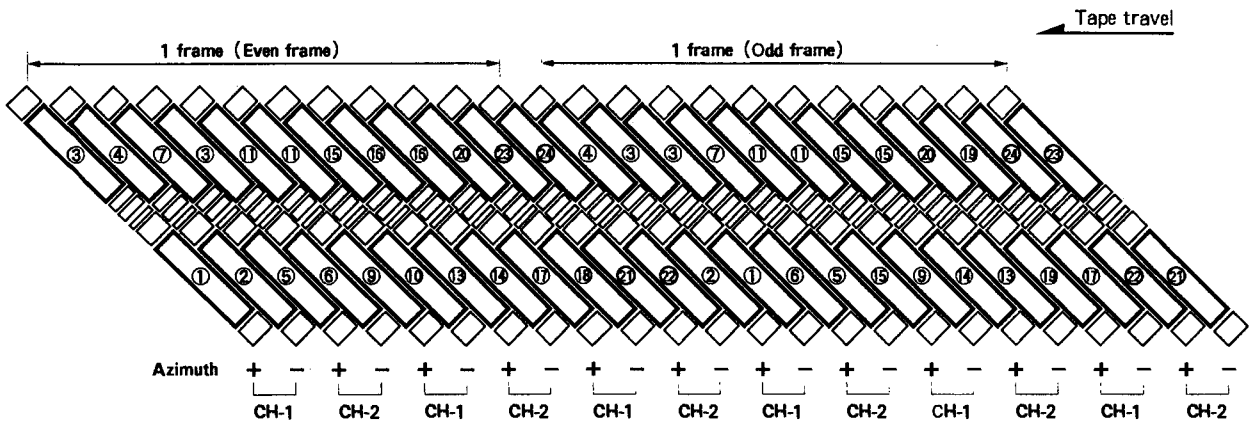


**Fig. 1-1-3(c) Track pattern (2)**

### 1.1.4 Drum assembly

**1. Construction of drum assembly**

The drum assembly is composed of a fixed upper drum, a rotary middle drum and a fixed lower drum. Since the sliding width of the rotary middle drum is narrow, it has the merit of stable contact between the head and tape. In other words, the rotary drum does not increase air insulation (air film) appearing at the drum entrance even when it runs at a speed 3 times as high (4500 rpm) as the VHS format.

Air film or air insulation means air stratum generated between the drum and tape by drum rotation. With increase of air film in thickness, contact between the drum and tape becomes unstable because air film isolates them from each other much more. The wider the sliding part is or the higher the drum rotation is, the thicker air film becomes.

**2. Construction of heads**

The head construction of the BR-D85E/D80E is shown in Fig. 1-1-4(b). The REC and PB heads of the DIGITAL S VTR are constructed by pairs of heads that have different azimuth as shown in the figure, therefore, recording or playback for two tracks are carried out at a time. Since video data for one frame is divided into twelve to be recorded on twelve tracks respectively, the drum runs at a speed 3 times (4500 rpm) as high as the VHS system.

The pre-read editing function once outputs PB signal to the special effect device, etc. and it again records the processed signal on the same tape. For realizing this function, the PB heads are mounted approximately 1 mm (for 4 frames) higher than the REC heads.

**Note:** The pre-read recording function is incorporated in the BR-D85E only.

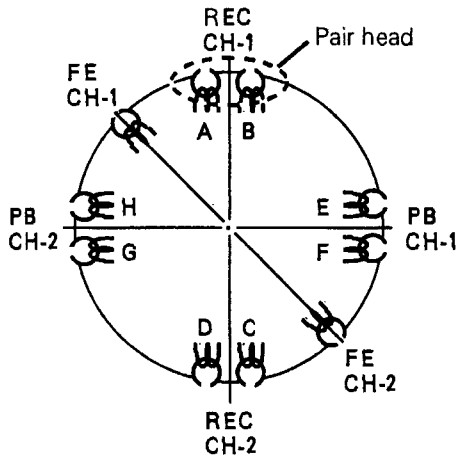


**Fig. 1-1-4(b) Head construction (BR-D85E/D80E)**

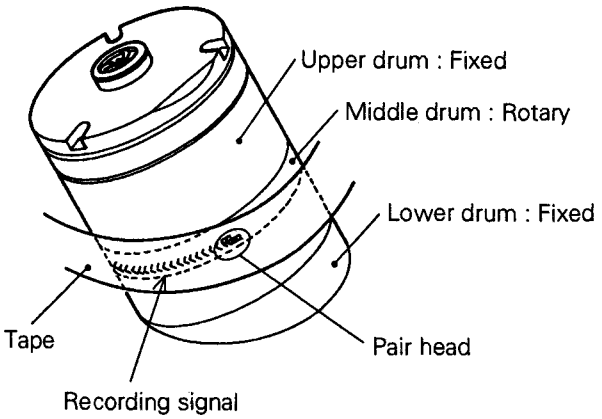


**Fig. 1-1-4(a)**

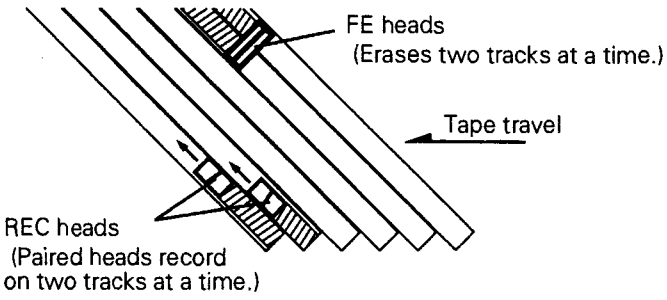


**Fig. 1-1-4(c) Recording by paired heads**

### 1.1.5 Video system

**1. Signal flow**

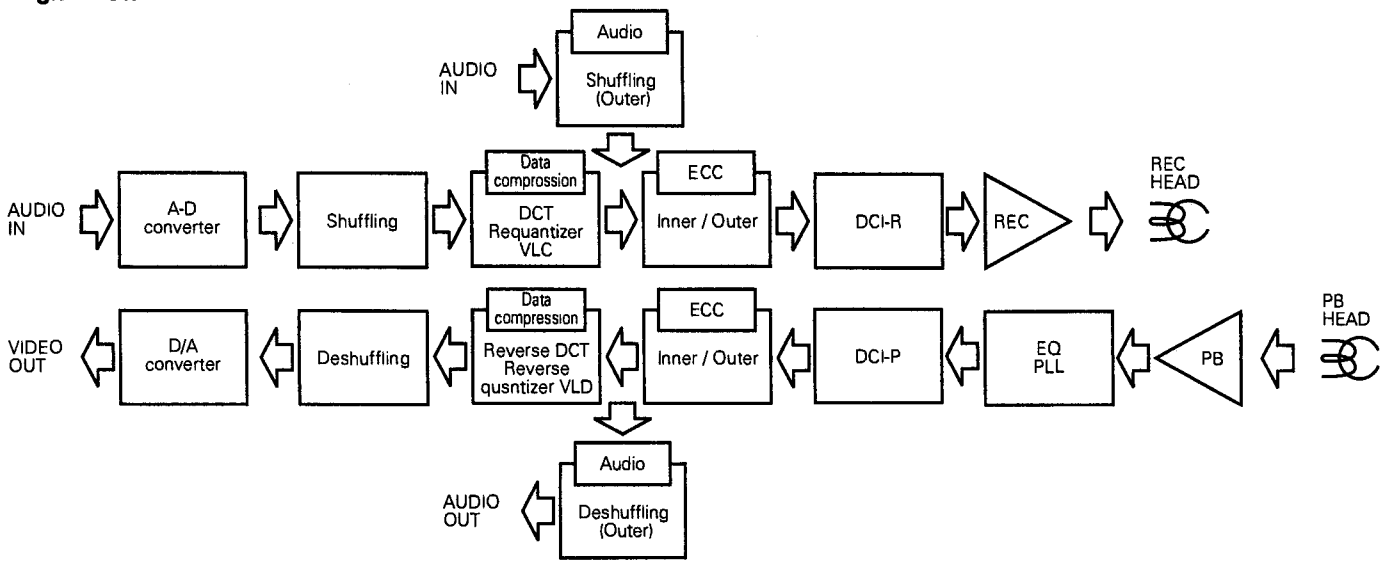


**Fig. 1-1-5 (a) is a flowchart of video signal processing.**

**2. Function of each block**

1) A-D converter

Since video signal is analog signal, the A-D converter functions to convert data of video signal into numerical value. Analog waveform is converted into numerical value by two factors of time axis and voltage. Splitting of time axis is called "sampling" while splitting of voltage is called "quantizing". The DIGITAL S system adopts the digital component (4:2:2) whose sampling frequencies are: Y = 13.5 MHz, R-Y/B-Y = 6.75 MHz, and quantized bits are 8 in number.

Since number of effective pixels is 720 (pixels) x 576 lines, quantity of data for 1 second is 166 Mbps (720[H] x 576[V] x 2[Y & C] x 8[bit] x 25[frame]).

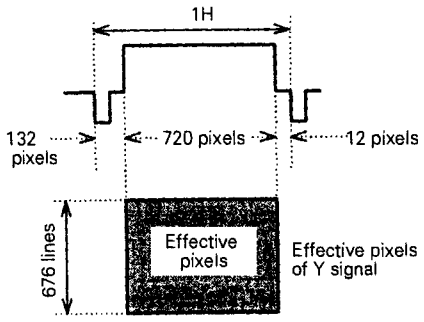


**Fig. 1-1-5(b) Effective pixels**

| Quantized bit | | 8-bits |
|---|---|---|
| Sampling frequency | Y (luminance) signal | 13.5MHz |
| | Color difference signal | 6.75MHz |
| Number of effective pixels per line | Y (luminance) signal | 720 pixels |
| | Color difference signal | 360 pixels |
| Number of lines for REC/PB | Y (luminance) signal | 578* |
| | Color difference signal | 578* |
| Line range for REC/PB | Field 1 | 23~310 |
| | Field 2 | 335~622 |

* 2 extra lines are included.

**Table 1-1-5(a) Video signal processing flowchart**

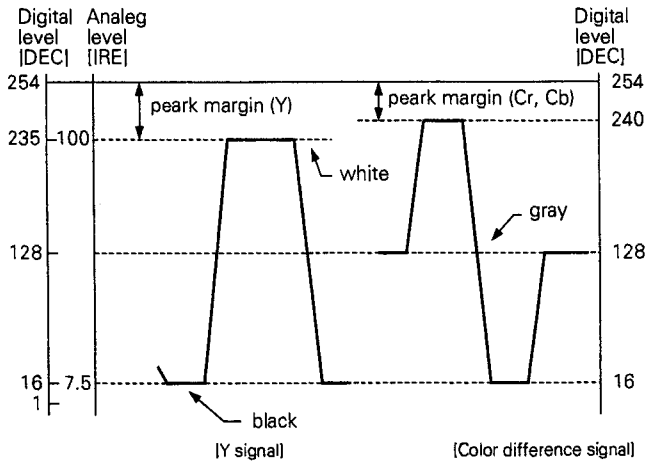


**Fig. 1-1-5(c) Video sampling level**

2) Shuffling

The purpose of shuffling is to distribute data contained in five macroblocks equally among them that are used as a unit of fixed length data as well as to make data distortion caused by compression inconspicuous. Concretely, five macroblocks that are unitized as mentioned below are collected from various points of a picture according to a prescribed rule for shuffling.

a) DCT block

Prior to shuffling, data for one frame is splitted into 8x8 pixel blocks (called DCT blocks), each of which is a basic unit of DCT. Since there is a difference in sampling frequency between Y signal and color difference signal, Y signal is splitted into 72(V) x 90(H) blocks while color difference signal is splitted into 72(V) x 45(H) blocks.

b) MB (Macroblock)

One macroblock is composed of four DCT blocks in the same position of a picture. Detail of four DCT blocks is two DCT blocks of Y signal and two DCT blocks of each color difference signal (Pb or Pr). Concealment of ECC is carried out at a unit of macroblock.

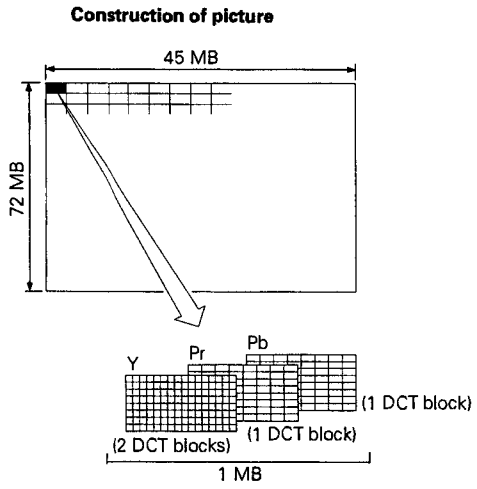


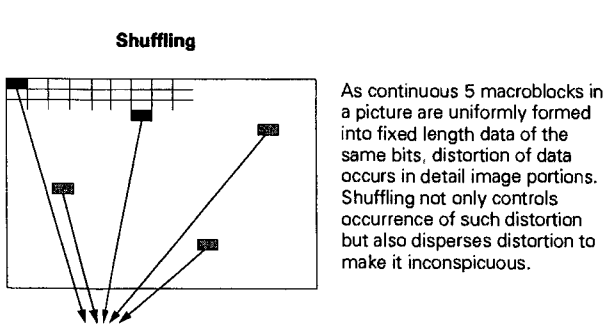


**Fig. 1-1-5(d) Shuffling**

3) Data compression

If video signals are converted into digital signals and converted data are recorded as they are, amount of recording data is so enormous that it needs data compression from viewpoints of recording time and tape consumption. TV screen consists of continuously moving scenes that are made up by 25 frames (PAL) a second, and there is little difference between respective continuous frames. If only the frames whose data are different from preceding frames are recorded, recording data can theoretically be reduced. This video data compression system is called interframe (between-frames) coding, and MPEG1 falls under this system. Although this data compression system utilizing correlation between frames can raise compression rate, it needs video data on preceding frames for reproducing a frame. Such being the case, it is difficult to adopt the system utilizing correlation between frames for the DIGITAL S VTR, because it is required to have such functions as editing at a unit of frame and playback at variable speed. Therefore, the DIGITAL S VTR adopts the intraframe coding system that compresses video data within each frame. In this compression system, image of a frame is divided into minute blocks (macroblocks), and they are grouped at a unit of five macroblocks to be coded as fixed length video data. As a result, video data for one frame can be compressed not to exceed a certain number of bits calculated according to video recording rate. Concretely, video data is compressed into 50 Mbps or 1/3.3 (50/166 Mbps) by high degree mathematical processing such as DCT (Discrete Cosine Transform), requantization, VLC (Variable Length Coding).

a) DCT (Discrete Cosine Transform)

DCT is a mathematical transformation theory utilized for DC-AC conversion of pixel value into frequency area. Since there is redundant data between neighboring pixels, DCT transforms pixel value into frequency area by DC-AC conversion. As a result, widely dispersed signal power can be concentrated in low frequency components which can easily be compressed.

Transformation of video data by DCT is carried out at a unit of DCT block, and transformed data are scanned zigzag as shown by Fig. 1-1-5(f). Since a plenty of zero values are detected as a result of the above-mentioned zigzag scan, code length can be shortened by the run length coding to be mentioned later.

b) Requantization

Requantization reduces amount of video data with little deterioration in picture quality, because low frequency components which signal power concentrate in are quantized fine while high frequency components which signal power is not dispersed in are quantized roughly.

In the requantization process, DCT output is splitted into four areas, which are respectively quantized by different quantizing steps. Quantizing step for each area is determined so that total amount of data of 5 macroblocks collected by shuffling fits in the specified amount. However, DC components are not requantized because they are important data.

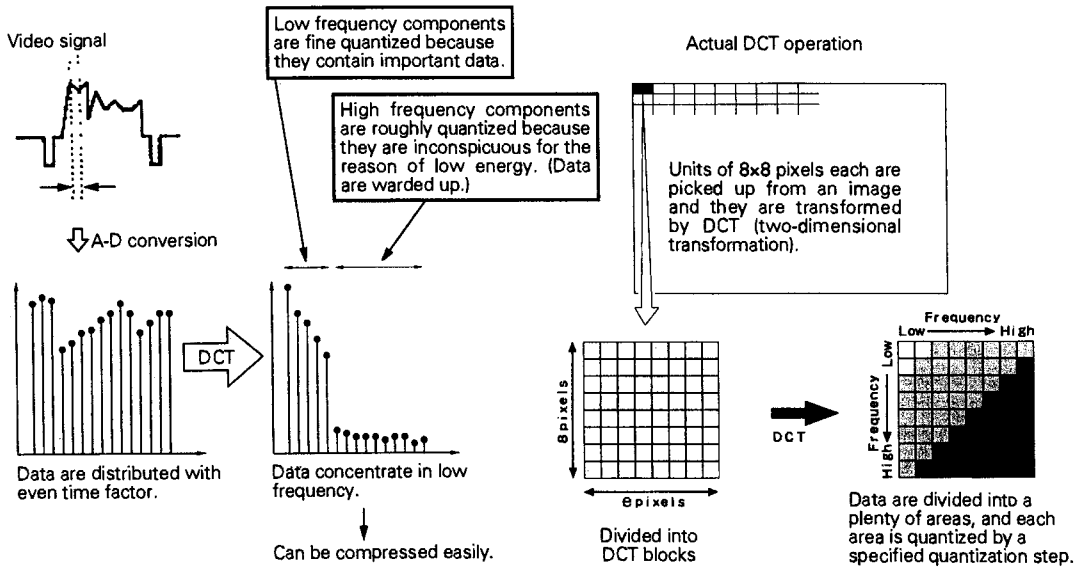


**Fig. 1-1-5 (e) DCT and raquentization**

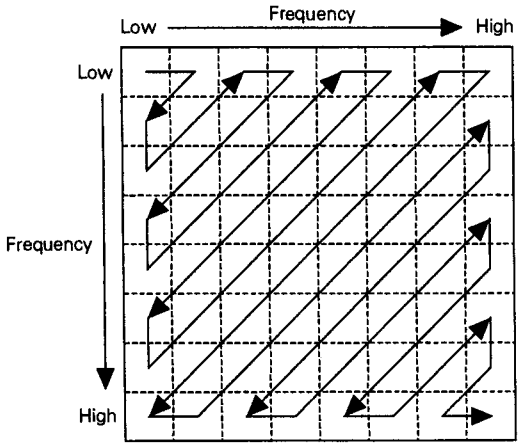


**Fig. 1-1-5 (f) Zigzeg scan**

c) VLC (Variable Length Coding)
Average code length can be shortened as a whole by allotting short code to high frequent matters and long code to low frequent matters. This coding method is called Variable Length Coding (VLC). The variable length coding adopted for the DIGITAL S format is constructed based on the Haffman coding in combination with the run length coding.

- Run length coding
  The run length coding, which is an efficient method to code data of "0" that is apt to appear continuously, transforms data into groups which consist of continuous "0" data and data other than "0" following continuous "0" data.

- Haffman coding
  Haffman coding can shorten total code length because it allots short length code to frequently appearing groups (consisting of continuous 0's and following data other than 0) processed by the run length coding.

4) ECC (Error Correction Code)
If digitized recording signal is affected by noise, dust on tape or something other, PB signal may possibly differ from the recording signal. Therefore, digital VTR generally adds error correction code to recording signal and plays back the recording signal after correcting errors in recording signal by the correction code.
The DIGITAL S VTR adopts the Reed-Solomon product coding that demonstrates high ability to correct both random error and burst error (sequent errors) for the video and audio systems.
Video : Inner - RS (85, 77), Outer - RS (149, 138)
Audio : Inenr - RS (85, 77), Outer - RS (14, 9)
The first number in parenthesis shows code length and the second number shows amount of data. Difference between these two numbers corresponds to number of parities.
If error that cannot be corrected occurs in audio, it gives incongrous feeling to the listener as audio's peculiar characteristic. Therefore, redundancy of audio's outer parity is increased to raise the correction ability.

5) DCI
DCI rearranges video data, audio data and other data to be recorded on tape so as to meet the DIGITAL S format. As a result of this reformatting, video and audio data for a frame are divided into sectors by every 24 video data and every 6 audio data (for a channel).
Moreover, DCI modulates data of track format as mentioned below, and the modulated data are converted from parallel data to serial data before it is sent to the REC amplifier.

• Modulation (Channel coding)
Prior to recording of digital signal on tape, the recording data column is converted so that it conforms to the digital recording/playback system, however, operation of this conversion depends on the recording/playback characteristics ef magnetic tape and machine being used, reoording data rate, and so on.
Although rotary transformer is generally used as a means to send signal to the rotary drum in the digital VTR, it is weak in sending a digital signal that contains continuous "0" or "1" data because there are much DC components in such the signal. On the other hand, it is needed to generate a clock synchronizing with playback signal by a PLL circuit for obtaining playback data. For generating and supplying this clock stably, it is also required to reduce continuity of "0" or "1" data in length. From a viewpoint of recording density, data pattern consisting of repetitive "0" and "1" is undesirable because repetition of "0" and "1" brings the severest recording/playback condition.
Channel coding of the DIGITAL S VTR is basically operated by SI-NRZI (scrambled interleaved non-return zero inverted) and 24·25 modulation.
As a result of the above-mentioned operation, data conversion is performed so that "0" and "1" are arranged suitably for adding sync signal and for recording/playback.

### 1.1.6 Audio eyetem

**1. Outline**

1) Numbar of recording channels
   - Digital audio : 4 channels (Available for independent insert editing. **In the case of BR-D50, BR-D80 and BR-D85, only 2-channels available for independent insert editing.)**
   - Search audio :2 channels (AC bias recording, to be used for search mode only)
2) Specifications of digital audio
   - Compression : None
   - Error correction : Read-Solomon product coding
     Inner (85, 77), Outer (14, 9)
   - Sampling frequency : 48 kHz
   - Number of quantizing bits : 16 bits
3) Audio AUX data
   Besides audio data, following data can be recorded in the audio block.
   - Number of REC channels : 2-channel mode or 4-channel moda
   - Emphasis : ON/OFF
   - Data on editing point : Editing point or not
   - Amount of recording data : 1896 to 1944 samples for 1 frame

**2. Circuit construstion**

1) Signal flow
   Signal processing by the audio system is shown in Fig. 1-1-6(c).
2) Function of each block
   - A-D converter
     This A-D converter converts analog audio signal into digital audio signal by asynchronous 48 kHz sampling clock to supply audio signal to the video system. Analog audio signal having the reference input level (+4 dBu) is converted into digital data equivalent to –20 dB in full-scale conversion.

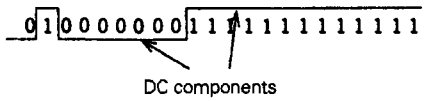


If racerding data contains a lot of continuous 0's and 1's, a great deal of DC components are generated and the rotary transformer hardly transmits signal to the drum. Moreover, it is hard to read signal out because of difficulty in bit synchronization.

If recording data contains alternate repetition of "0" and "1", recording frequency becomes high and it is hard to read signal out.

**Fig. 1-1-5(g)**

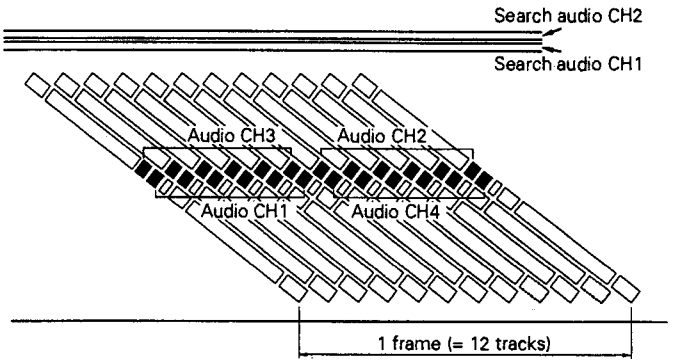


**Fig. 1-1-6(e) Audio signel processing**

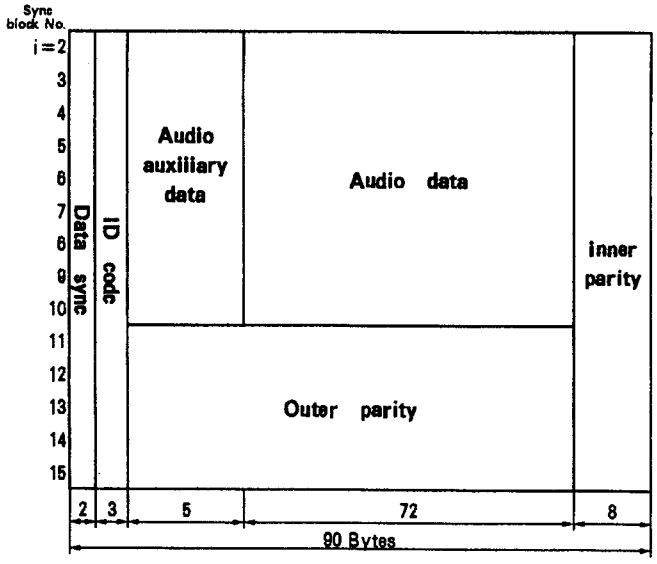


**Fig. 1-1-6(b) Construction of audio block**

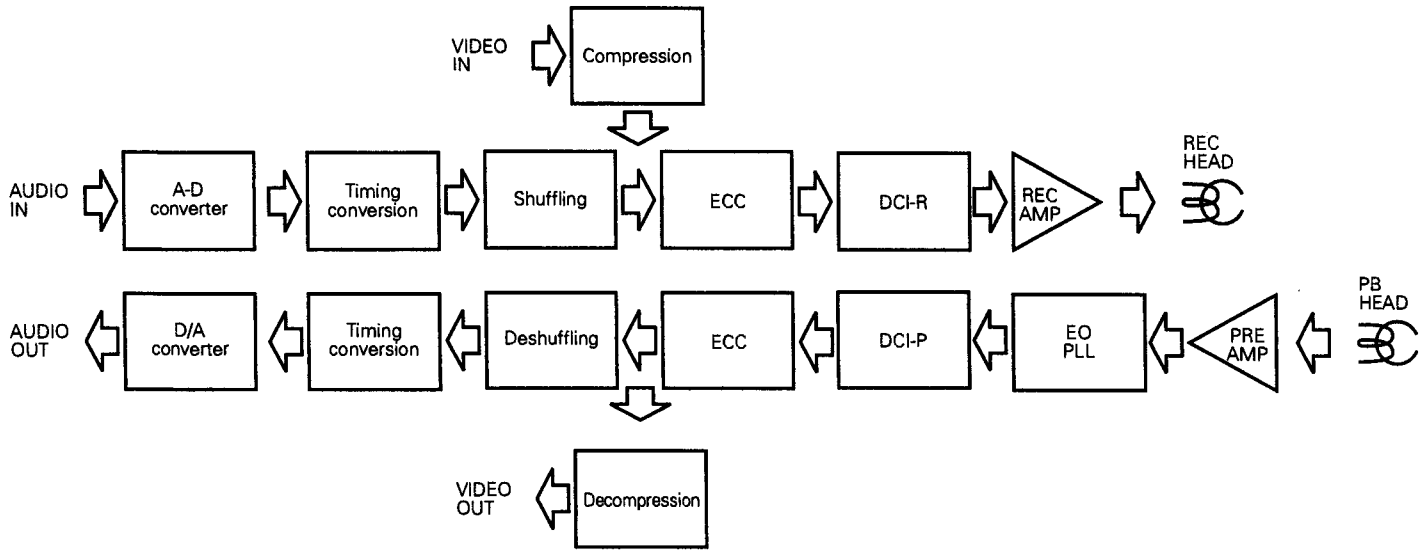


**Fig. 1-1-6(c) Audio signal processing**

- Data rate transformation
  [In recording:]
  Audio data that was asynchronously sampled is processed to synchronize with video signal. In concrete words, audio data is splitted into units equivalent to 1 video frame each, and then each unit data is synchronized with clock for the video system. At that time, amount of sampling data for 1 frame is not fixed and different from frame to frame. Therefore, amount of recorded data is put on record in the audio AUX area.

  [In playback:]
  Audio data that was transformed for recording is restored to the original rate. In short, VCO is controlled to equalize clocks for 1-frame period to data recorded in the audio AUX area in number, and resultingly yielded clocks are used for rate transformation in this stage.

- Shuffling/Deshuffling
  [Shuffling]
  Shuffling rearranges recording data according to a prescribed rule for making error correction possible if burst error occurs.
  [Desshuffling]
  Deshuffling restores transformed recording data format to the original mode for playback.
- ECC, DCI
  Refer to 1.1.5.
- D-A converter
  This D-A converter converts digital data into analog data.

## 1.2 REMOVINO OF OUTER COVERS

### 1.2.1 Top cover

1. Loosen two screws ①.
2. Remove the top cover while raising it by the rear.

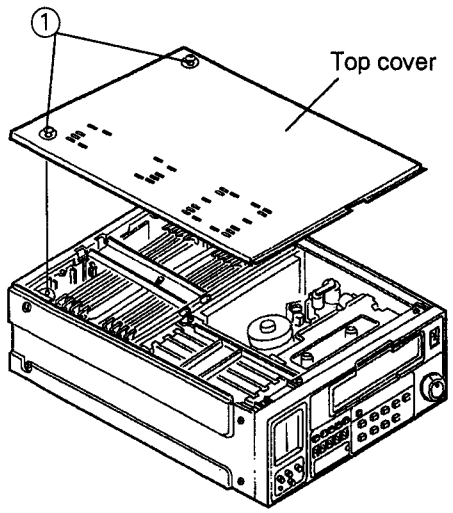


**Fig. 1-2-1**

### 1.2.2 Sido covor

1. Remove the top cover. (Refer to 1.2.1.)
2. Remove four screws ② and remove a side cover.

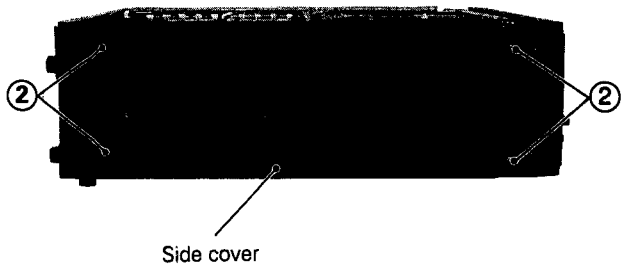


**Fig. 1-2-2**

### 1.2.3 Front panel assembly

1. Remove the top cover. (Refer to 1.2.1.)
2. Remove six screws ③.
3. Remove four control knobs (or two from the set exclusively used for playback) such as TRACKING VR, etc.
4. Draw the front panel assembly frontwards and disconnect the connector from the JOG/SHUTTLE assembly. Then draw the front panel furthermore for removing.

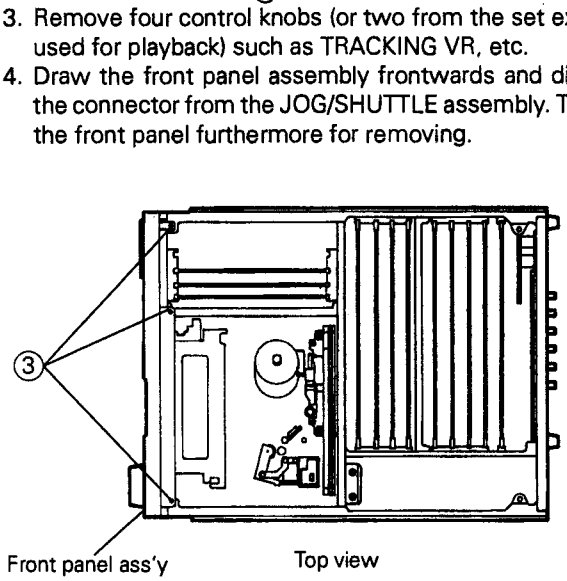


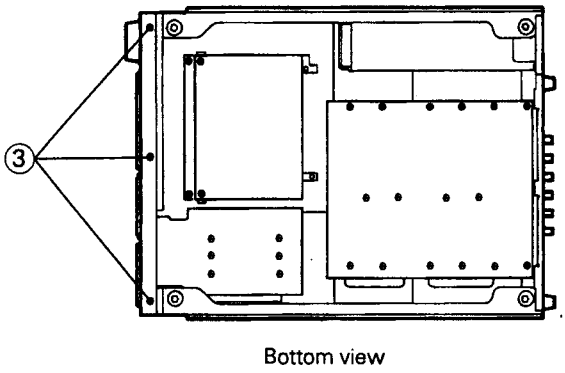


**Fig. 1-2-3**

### 1.2.4 Sottom cover

1. Remove five screws ④ and remove the bottom cover.

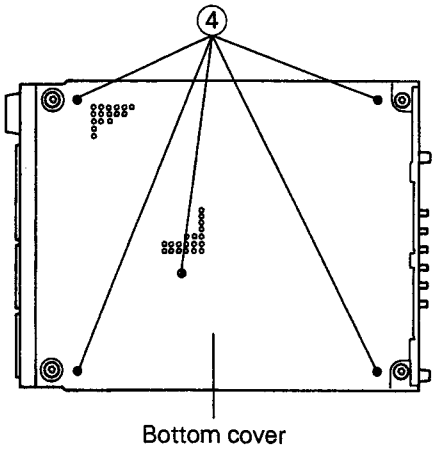


**Fig. 1-2-4**

## 1.3 REMOVING OF MAIN P.C. ROARDS

**Note:**

When removing or remounting P.C. board, make sure to turn the POWER switch off or disconnect the power supply beforehand. When remounting P.C. board, restore it to the original position without fail. For location of main P.C. boards, refer to "3.1.5 Location of main P.C. boards".

**Teble 1-3-1 Removing of mein P.C. boards**

<table>
<tr><th>Group</th><th>Board name</th><th>Extension board</th><th>Removing procedure</th></tr>
<tr><td rowspan="2">A</td><td>[1][3] PV PROCESS<br>[1][4] OUT MEM<br>[1][5] ANA IN<br>[1][7] OUT/GEN<br>[1][9] OUT ENC<br>[2][1] DIG AUD<br>[2][2] AUD I/O<br>[3][1] SYS/TC<br>[6][0] DIG I/O<br>(BR-D85E, SA-D80U/D50U)</td><td>KLJ0054</td><td rowspan="2">1) Remove the top cover. (Refer to 1.2.1.)<br>2) Remove the board holder .<br>3) Remove a target board while raising its ejectors up.<br>4) Use the extension board for checking.<br> 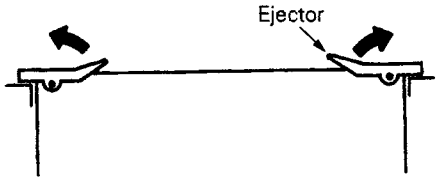 <br><br>WARNING<br>When mounting each board, pay careful attention to its mounting place, particularly to the mounting place of the PV PROCESS board. If the PV PROCESS board is mounted in a wrong place or any board other than the PV PROCESS board is mounted in the place specified for the PV PROCESS board, the wrong mounted board may possibly be dameged.</td></tr>
<tr><td>[1][2] RF PRO1<br>[1][8] RF PRO2<br>[2][0] ANA AUDIO</td><td>KLJ0055</td></tr>
<tr><td>B</td><td>[3][2] OPERATION<br>[3][3] HP</td><td>KLJ0087</td><td>1) Remove the top cover. (Refer to 1.2.1.)<br>2) Remove the front panel assembly. (Refer to 1.2.3.)<br>3) Execute "1.3.1 Removing of board belonging to Group B".</td></tr>
<tr><td>C</td><td>[0][1] MOTHER-1<br>[0][2] MOTHER-2</td><td>—</td><td>1) Remove the top cover. (Refer to 1.2.1.)<br>2) Remove all boards of "Group A".<br>3) Place the set bottom side up and remove the bottom cover. (Refer to 1.2.4.)<br>4) Execute "1.3.2 Removing of board belonging to Group C".</td></tr>
<tr><td>D</td><td>[3][0] MCTL/SV<br>[3][6] REEL MDA</td><td>—</td><td>1) Place the set bottom side up and remove the bottom cover. (Refer to 1.2.4.)<br>2) Execute "1.3.3 Removing of board belonging to Group D".</td></tr>
<tr><td>E</td><td>[4][0] REAR-1<br>[4][1] REAR-2</td><td>—</td><td>1) Remove the top cover. (Refer to 1.2.1.)<br>2) Disconnect wires from the DIGITAL I/O terminal (if mounted).<br>3) Execute "1.3.4 Removing of board belonging to Group E".</td></tr>
<tr><td>F</td><td>[1][1] REC/ITI<br>(BR-D85E, D80E)</td><td>PRK10157A5</td><td>1) Remove the top cover. (Refer to 1.2.1.)<br>2) Execute "1.3.5 Removing of board belonging to Group F".</td></tr>
<tr><td>G</td><td>SWITCHING REGULATOR</td><td>—</td><td>1) Remove the top cover. (Refer to 1.2.1.)<br>2) Remove the bottom cover. (Refer to 1.2.4.)<br>3) Disconnect connectors from the switching regulator.<br>4) Execute "1.3.6 Removing of board belonging to Group G".</td></tr>
</table>

### 1.3.1 Removing of boerd bolonging to Group B

1. Remove nine screws ⑤ and then remove the OPERATION board.

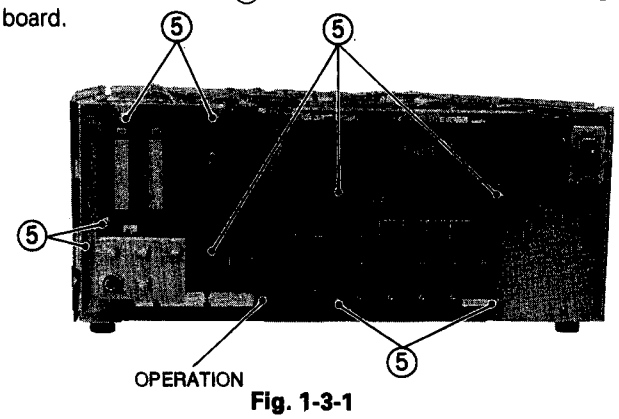


**Fig. 1-3-1**

### 1.3.2 Removing of board belonging to Group C

**• MOTHER-1 boerd**

1. Remove sixteen screws ⑤.
2. Disconnect all connectors from the MOTHER-1 board and then remove the board.

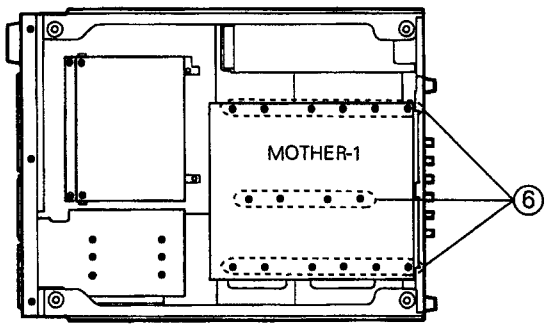


**Fig. 1-3-2**

**• MOTHER-2 boerd**

1. Remove the front panel assembly. (Refer to 1.2.3.)
2. Remove six screws ⑥.
3. Disconnect all connectors from the MOTHER-2 board and then remove the board.

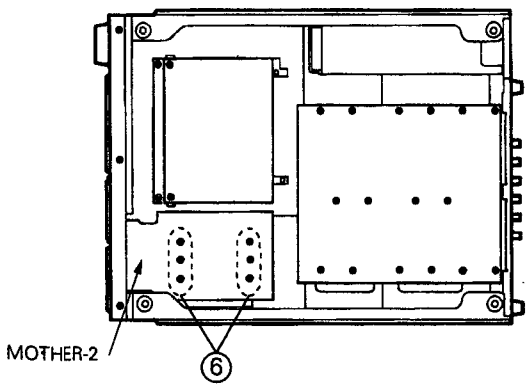


**Fig. 1-3-3**

### 1.3.3 Romoving of board bolonging to Group D

**• MCTL/SV board**

1. Remove two screws ⑥ and open the MCTL/SV board frontwards. The board can be checked in this condition.
2. For removing the MCTL/SV board, disconnect all connectors from the board prior to removing.

**Note:** There is a fear that IC8 (EEPROM) on the MCTL/SV board may possibly damaged by static electricity. When removing the board, do it with the most meticulous care.

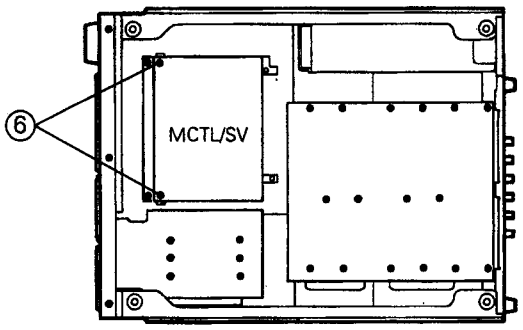


**Fig. 1-3-4**

**• REEL MDA board**

1. Open the MCTL/SV board frontwards. (Refer to preceding description in this subsection.)
2. Remove four screws ⑥ and then detach the REEL MDA board from the bracket. The board can be checked in this condition.
3. For removing the REEL MDA board, disconnect all connectors from the board prior to removing.

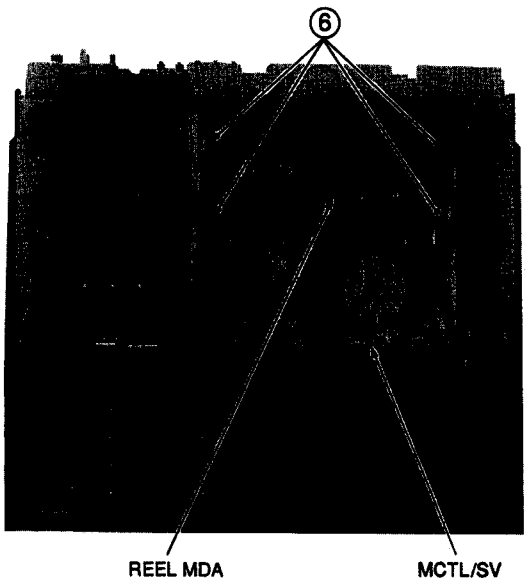


**Fig. 1-3-5**

### 1.3.4 Removing of boerd belonging to Group E

**• REAR-1 board**

1. Remove six screws ⑦ (indicated by ⇨ arrow) first and then remove the rear bracket.
2. Remove twelve screws ⑧.
3. Disconnect all connectors from the REAR-1 board.
4. Remove three screws ⑥ and then remove the REAR-1 board.

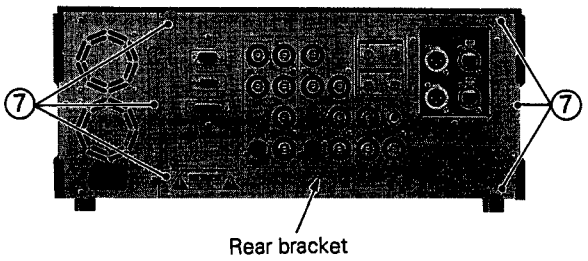


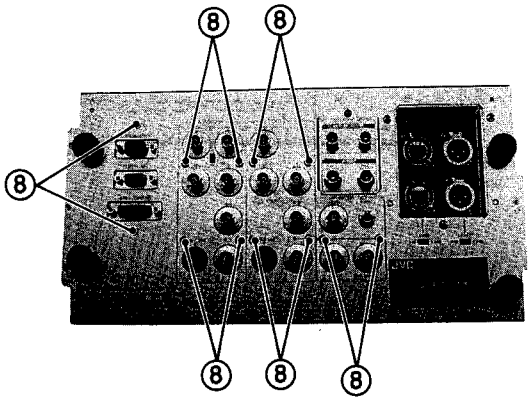


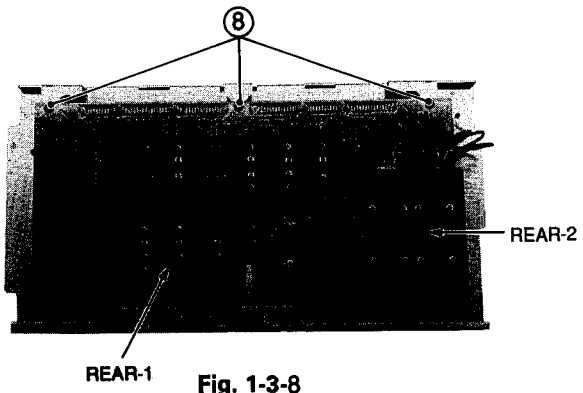


Fig. 1-3-8

**• REAR-2 boerd**

1. Disconnect all connectors from the REAR-2 board.
2. Remove three screws ⑧ and then remove the REAR-2 board.

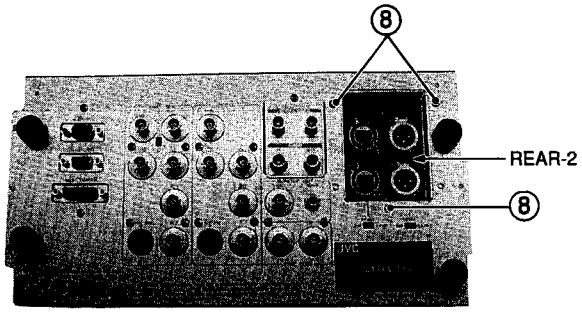


Fig. 1-3-7

**•DIGITAL I/G connector**

The wires of the DIG I/O board are connected to the DIG I/O terminal as shown figure below.

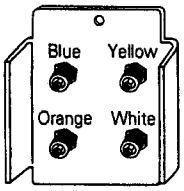


Fig. 1-3-8

### 1.3.5 Removing of board belonging to Group F

1. Remove two screws ⑨.
2. Disconnect all connectors from the REC/ITI board.
3. Remove the REC/ITI board while raising it up.

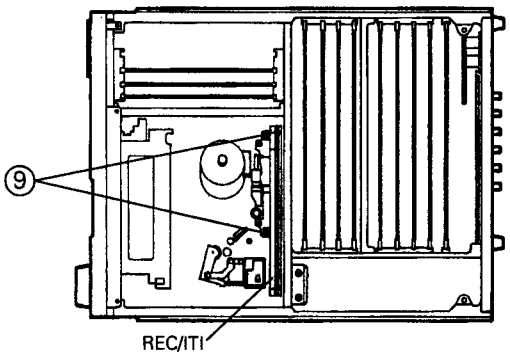


Fig. 1-3-9

### 1.3.5 Ramoving of board belonging to Group G

1. Remove four screws ⑦.
2. Remove two screws ⑩.
3. Draw the switching regulator assembly rearwards to remove it.

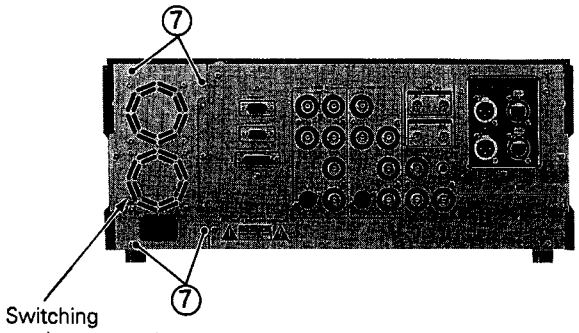


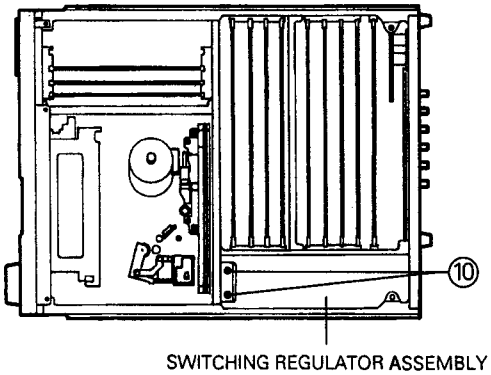


Fig. 1-3-10

## 1.4 EXPLANATION OF INTERNAL SWITCHES ON BOARDS

### 1.4.1 Function of eech ewitch

[1][4] OUT MEM

| Symbol No. | Switch name | Setting on shipment | Function |
|---|---|---|---|
| S1 | Adjusting switch | Always OFF all | Adjustment switches. Don't change the original setting.<br>1 : Not connected<br>2 : Adjustment switch for the board alone.<br>3 : Adjustment switch for Y/C timing.<br>To change output order of digital Y and C outputs.<br>4 : Functionless |

[1][7] OUT/GEN

| Symbol No. | Switch name | Setting on shipment | Function |
|---|---|---|---|
| S301 | Sync phase adjusting switch | Depends on factory adjustment. | Adjustment switch for sync phase of output signal. Don't change the original setting except the case it is used for "3.6.8 Sync phase adjustment". |

[1][9] OUT/ENC

| Symbol No. | Switch name | Setting on shipment | Function |
|---|---|---|---|
| S1 | Y/C delay adjusting switch | Always NOR all 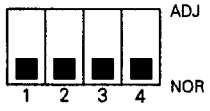  | Don't change the original setting except the case it is used for "3.7.9 Y/C delay adjustment". |

[6][0] DIG I/O (BR-D85E, SA-D80U / D50U)

| Symbol No. | Switch name | Setting on shipment | Function |
|---|---|---|---|
| S201 | Digital audio output level selector switch | 3V S201 1V 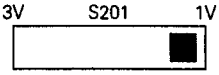 | To be used to switch digital audio output level.<br>1V : For unbalanced output with BNC connector used.<br>3V : For balanced output with "unbalanced (BNC)-to-balanced (XLR)" output converter connector used. |

## 1.5 MANUAL EJECTION OF CASSETTE TAPE IN AN EMERGENCY

When the cassette tape is not ejected from the set because of the slack of tape or failure in the mechanism, eject it manually referring to the following cases.
In such an event, remove the top cover first (refer to 1.2.1) to know the current status of the cassette tape, and then proceed to the removing work according to Table 1-5-1.

**Table 1-5-1 Tape and mechanism conditions**

| | 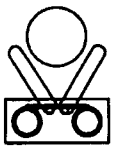 | 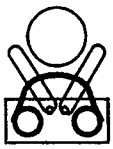 | |
|---|---|---|---|
| **Tape status** | Tightly taken up | Loosely wound | Not taken up |
| **Mechanism statua** | Unloading end | Unloading end | Loading end or halfway |
| **Refarence aaction** | 1.5.1 | 1.5.2 | 1.5.3 or 1.5.4 |

### 1.5.1 Whan tape is in unloading condition:

1. Make sure that the tape is completely in unloading condition.
2. Turn off the power.
3. Turn the main gear of the cassette housing assembly in the direction shown by Fig. 1-5-1.

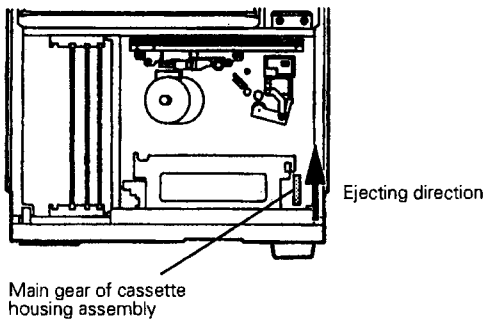


**Fig. 1-5-1 Turning direction of main gear of cassette housing assembly**

4. The cassette housing starts ejecting operation.
5. Continue to turn the main gear until the cassette tape is completely ejected.

### 1.5.2 When the set is in "AUTO OFF" mode though tape is slack

1. Press the COUNTER RESET, FF and REW buttons together in the "AUTO OFF" mode.
2. The set enters test mode No. 63: LOW TORQUE (M) ("63" appears on the counter display). While confirming this messages, press the COUNTER RESET button again.
3. Turn the JOG dial clockwise, and the reel motor rotates to wind the slacken tape.

**Note:**
Don't turn the JOG dial counterclockwise. If it is done so, it slackens the tape moreover.

4. After this, perform the same steps as the preceding section 1.5.1 to eject the cassette tape.

### 1.5.3 When tape is still in loading condition (1):

If there is nothing faulty in the reel servo system, the tape can be taken up in a test mode.
1. Make sure that the set is in the "AUTO OFF" mode.

**Note:**
When the set is not in the "AUTO OFF" mode, it cannot be entered into the test mode. If so, proceed to the following section 1.5.4.

2. Press the COUNTER RESET, FF and REW buttons together in the "AUTO OFF" mode.
3. The set enters test mode No. 63: LOW TORQUE (M) ("63" appears on the counter display). While confirming this messages, press the COUNTER RESET button again.
4. While turning the mode motor in the direction shown by Fig. 1-5-2, turn the JOG dial clockwise.

**Note:**
Don't turn the JOG dial counterclockwise. If it is done so, it slackens the tape moreover.

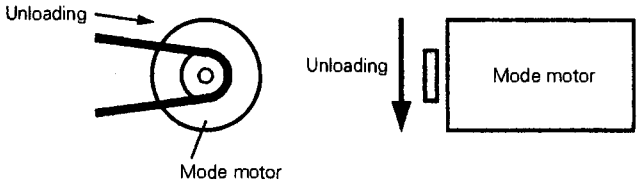


**Fig. 1-5-2 Turning direction of mode motor**

5. The reel motor starts unloading operation while rotating in the take-up direction at a low torque to take in the slack of the tape. Continue the above step 4 until the tape is set in the unloading position.
6. After this, perform the same steps as the previous section 1.5.1 to eject the cassette tape.

### 1.5.4 When tape is still in loading condition (2):

If the tape cannot be ejected by the above steps of 1.5.4 because of failure cf the reel motor, etc., try to do the following steps.
1. Place the set on its rear side.
2. Remove the bottom cover. (Refer to 1.2.4.)
3. Turn the mode motor in the direction shown by Fig. 1-5-2.
4. The mechanism starts unloading.
5. While inserting a finger into the mechanism from the bottom side, turn the supply reel motor clockwise by the finger to wind up the tape.

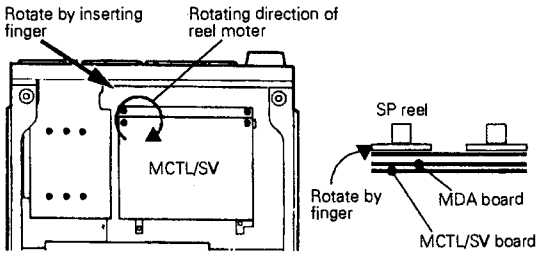


**Fig. 1-5-3 Turning direction of supply reel motor**

6. Repeat the above steps 3 to 5 until the tape is set in the unloading position.
7. After this, perform the same steps as the previous section 1.5.1 to eject the cassette tape.

## 1.6 HOUR METER AND VERSION INDICATION

### 1.6.1 Outlino

This VTR can show such various data as mentioned below on the on-screen display and counter display.

1. Version of CPU program (XXX ROM Ver.)
2. Accumulated power on hour (POWER HOUR METER)
3. Accumulated running hour of drum motor (DRUM HOUR METER)
4. Accumulated running hour of capstan motor (CAP HOUR METER)
5. Accumulated running hour of reel motor (REEL HOUR METER)
6. Accumulated power on/off times
7. Accumulated loading/unloading times
8. Accumulated intake/eject times
9. Accumulated head cleaner operation times

### 1.6.2 Operation

1. Call up the SERVICE MENU SWITCH on the display. (Refer to 1.7.3, items 1 to 3.)
2. The SERVICE MENU SWITCH appears both on the counter display and on-screen display. FF button is pressed then the SYSCON ROM versicn is displayed (Direct access).

**Note:**

Only the DRUM HOUR METER can be checked by the REGULAR MENU SWITCH.

3. As the JOG dial is turned, item shown on the display changes as shown in Fig. 1-6-2. Detail of indications is shown in Fig. 1-6-1.
4. For quitting the HOUR METER and VERSION INDICATION, turn off the power.

**• Example of pregram versien indicatien**

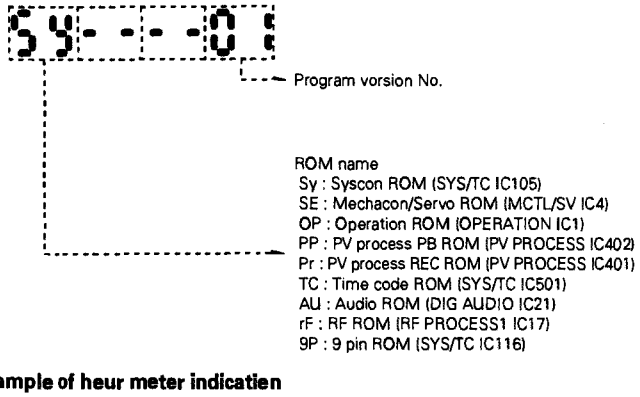


**• Example of heur meter indicatien**

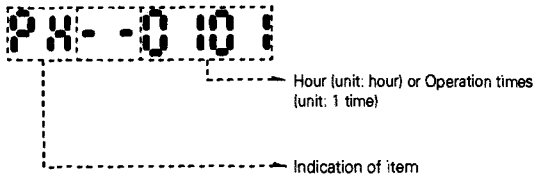


**Fig. 1-6-1 Indication of hour meter and ROM version (1)**

**• Examples of counter display indication**

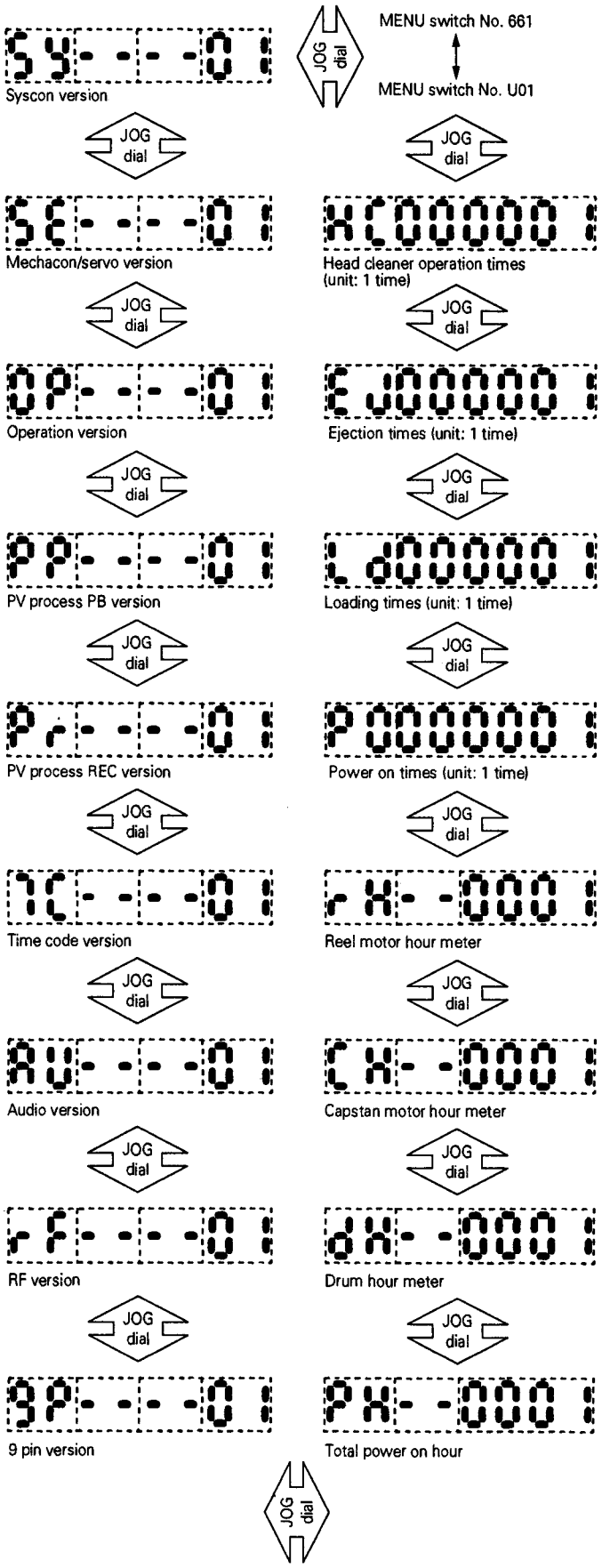


**Fig. 1-6-2 Indication of hour meter and ROM version (2)**

## 1.7 SERVICE MODE

**Note:**

Mind that "SERVICE MODE" mentioned in this section differs from "SERVICE MENU SWITCH". In short, the SERVICE MODE is the general term for all menus shown in Fig. 1-7-1 while the SERVICE MENU SWITCH means the menu switches those are not opened for users explained in the section 1.7.3.

### 1.7.1 Outline

The SERVICE MODE of this VTR functions as follows.

1. Calling and setting of SERVICE MENU switches.
2. Saving and calling of setting of MENU switches.
3. Resetting of MENU switches. (To restore switch setting to initial status on shipment from factory)
4. Displaying and resetting (factory use only) of hour meters.
5. Displaying and resetting (factory use only) of operation times.
6. Displaying and resetting of warning records.
7. Saving and calling of data written on the EEPROM of the MECHACON/SERVO board.

### 1.7.2 HOW TO OPEN SERVICE MODE

1. Take the cassette tape out of the set and turn off the POWER switch.
2. Turn on the POWER switch again and press EJECT + STOP buttons together within 2 seconds after the counter display lights up.
3. Both the on-screen display and counter display show the SERVICE MODE.
4. Select a desired item (submenu) by turning the JOG dial.
5. Set the selected item referring to its usage.
6. When setting is complete, turn off the POWER switch without fail.

**Notes:**

- The SERVICE MODE called up on the display can be cleared by turning off the POWER switch only. As long as the SERVICE MENU switch is appearing on the display, all items of MENU switches are ready for showing and resetting.
- When the MENU switch No. 357 "DIAG AT POWER ON" or No. 002 "OPERATION LOCK" is being set to "ON (1)", is not available the SERVICE MODE.

**• SERVICE MODE to be shown on on-screen display**

**0: SERVICE MENU SW**

0: SERVICE MENU SW (Refer to 1.7.4, 1.7.5 and 1.7.6.)
Menu for saving and calling MENU switch setting as well as for resetting it to the initial status on shipment from factory.

**1 : HOUR METER CLEAR**

1: HOUR METER CLEAR (Factory use only)
Menu for resetting each hour meter to zero.

**2 : RUNNING TIMES CLEAR**

2: RUNNING TIMES CLEAR (Factory use only)
Menu for resetting number of operation times of each item.

**3 : M/S EEPROM**

3: M/S EEPROM (Refer to 1.7.9.)
Menu for saving and calling data written on the MECHACON EEPROM.

**4 : ERROR CLEAR**

4: ERROR CLEAR (Refer to 1.7.10.)
Menu for clearing warning records.

**5 : ER. CALL 0 TIMES AGO**

5: ERROR CALL 0 TIMES AGO (Refer to 1.7.11.)
Menu for examining the last warning record.

**6 : ER. CALL 1 TIMES AGO**

6: ERROR CALL 1 TIMES AGO (Refer to 1.7.11.)
Menu for examining the warning record prior to the last.

**7 : ER. CALL 2 TIMES AGO**

7: ERROR CALL 2 TIMES AGO (Refer to 1.7.11.)
Menu for examining the third latest warning record.

**8 : ER. CALL 3 TIMES AGO**

8: ERROR CALL 3 TIMES AGO (Refer to 1.7.11.)
Menu for examining the fourth latest warning record.

**0 : SERVICE MENU SW**
0: SERVICE MENU SW
The SERVICE MENU SW repeatedly appears as the JOG dial is continuously turned.

**Fig. 1-7-1 Detail of SERVICE MODE**

### 1.7.3 Setting of SERVICE MENU SWITCHES

This VTR has special menu switches to be exclusively used for servicing (SERVICE MENU SWITCHES) that are not mentioned in the instruction manual for users. This section explains methods to change settings of those service menu switches.

1. Set to the SERVICE MODE. (Refer to 1.7.2.)
2. Press the MENU button. The SERVICE MODE is replaced by tape counter indication on the display.
3. Press the MENU button once again and all menu switches including the service menu switches will be shown on the display.
4. Select a desired item by turning the JOG dial.
5. Change the setting of the item with the SELECT button.
6. Press the SET button to save the changed data on setting. The display is restored to the usual indication at the same time. (Pressing the MENU button restores the display to the usual indication but it doesn't save the changed data.)
7. Lastly, turn off the POWER switch.

**Note:** Table 1-7-1 shows the SERVICE MENU SWITCHES only, which are excerpted from the whole MENU switches. Actually, all the MENU SWITCHES are shown on the display.

**Table 1-7-1 Detail of SERVICE MENU SWITCHES (1)**

**Note:**
Number in square brackets [ ]expresses initial setting on shipment from factory.

| No. | Item | Function | Counter displsy | Description |
|---|---|---|---|---|
| 303 | WARNING | Warning mode on/off | [0] | ENABLE: Warning signal is accepted. |
| | | | 1 | DISABLE: Warning signal is not accepted. (To be used for investigating the cause of warning) |
| 304 | REC | REC mode on/off (D80 and D85 only) | [0] | ENABLE: Recording is permitted. (With the erase protection slide lock set to "REC") Recording is inhibited. |
| | | | 1 | DISABLE: Recording is inhibited. |
| 305 | REPEAT REC | Repeat recording on/off (D80 and D85 only) | [0] | OFF: Repeat recording is not performed. |
| | | | 1 | ON: Repeat recording is performed. |
| 306 | LONG PAUSE / STILL / STP | Tape protection function on/off | 0 | OFF: Tape protection function (Long Pause mode) is not activated. |
| | | | [1] | ON: Tape protection function (Long Pause mode) is activated according to setting of the MENU switch No. 307 to No. 309. |
| 307 | PAUSE / STILL / STP TIME | Setting an interval to shift the mode to the Long Pause when the MENU switch No. 306 is set to "1". | 0 | The set enters Long Pause mode 1 second later. |
| | | | 1 | The set enters Long Pause mode 10 seconds later. |
| | | | 2 | The set enters Long Pause mode 30 seconds later. |
| | | | 3 | The set enters Long Pause mode 1 minute later. |
| | | | 4 | The set enters Long Pause mode 2 minutes later. |
| | | | 5 | The set enters Long Pause mode 3 minutes later. |
| | | | 6 | The set enters Long Pause mode 4 minutes later. |
| | | | [7] | The set enters Long Pause mode 5 minutes later. |
| 308 | LONG PAUS / STILL MODE | Selecting a mode next to the PAUSE/STILL mode when the set is left in the PAUSE/STILL mode with the MENU switch No. 306 is set to "1". | 0 | The set enters Standby-Off mode. (according to the MENU switch No. 310) |
| | | | [2] | The set performs STEP FWD operation at intervals of the time set by the MENU switch No. 307. (The set enters Standby-Off mode after this operation is repeated four times.) |
| 309 | LONG STOP MODE | Selecting a mode next to the Standby-on mode when the set is left in the Standby-on mode with the MENU switch No. 306 being set to "1". | [0] | The set enters Standby-Off mode. (according to the MENU switch No. 310) |
| | | | 2 | The set performs STEP FWD operation at intervals of the time set by the MENU switch No. 307. (The set enters Standby-Off mode after this operation is repeated four times.) |
| 310 | STANDBY – OFF MODE | Selecting mechanism position and drum status when the mode is set to the Standby-off mode. | 0 | DRUM: ON (running), MECHA: FULL LOAD |
| | | | [1] | DRUM: OFF (stopping), MECHA: FULL LOAD |
| | | | 2 | DRUM: OFF (stopping), MECHA: UNLOAD |
| 315 | LOCAL FUNCTION | Selecting an operation button to be accepted by the VTR when the REMOTE switch is set to "9-PIN". | [0] | Operation of STOP/EJECT button is enabled. |
| | | | 1 | Operation of STOP/EJECT/FF/REW/PLAY/STILL button is enabled. |
| | | | 2 | Operation of every button is enabled. |
| | | | 3 | Operation of every button is disabled. |
| 316 | LOCAL CMD FUNCTION | Selecting a 9-pin command to be accepted by the VTR when the REMOTE switch is set to "LOCAL". | [0] | All commands are not accepted. |
| | | | 1 | Only STOP and EJECT commands are accepted. |
| 320 | PREROLL TIME | Selecting a preroll time to respond to a 9-pin command "20.30: PREROLL" if it is received. | 0 | 0 second |
| | | | ⋮ | ⋮ |
| | | | [5] | 5 seconds |
| | | | ⋮ | ⋮ |
| | | | 15 | 15 seconds |

**Table 1-7-1 Deteil of SERVICE MENU SWITCHES (2)**

**Note:**
Number in square brackets expresses initial setting on shipment from factory.

| No. | Item | Function | Counter displsy | Description |
|---|---|---|---|---|
| 323 | PREROLL END MODE | Selecting a mode following preroll operation to correspond to "20.30: PREROLL" of a 9-pin command if it is received. | [0] | STANDBY-ON mode follows preroll operation. |
| | | | 1 | STILL mode follows preroll operation. |
| 325 | CTL COUNTER MODE | Selecting step-up mode of the CTL counter. | [0] | CTL counter steps forward in 10-hours mode. |
| | | | 1 | CTL counter steps forward in 24-hours mode. |
| 327 | CTL CLEAR AT EJECT | To clear or not to clear the CTL counter with EJECT operation. | 0 | DISABLE : Not to clear. |
| | | | [1] | ENABLE : To clear. |
| 343 | SUB WARNING | Selecting warning mode. | [0] | According to setting of MENU switch No. 303. |
| | | | 1 | When MENU switch No. 303 is set to "ENABLE", some warnings (56, 57, 58) won't occur. |
| 350 | SPECIAL MODE | Switching between standard specifications and special (optional) specifications. | [0] | Standard specifications |
| | | | 1 | Special specifications (when special specifications are optionally installed) |
| 358 | DIAG WARNING | To show or not to show a result of self-diagnosis. (This function is effectuated only at power on when the MENU switch No. 357 is set to "ON".) **Note:** When the VTR is turned on as this MENU switch is set to "ENABLE(0)", a warning indication "8203", "8204" or "9182" appears on the display. This does not express a trouble of the VTR but just comes from the peculiarity of the VTR. | 0 | ENABLE : Warning indication. |
| | | | [1] | DISABLE : No warning indication. |
| 406 | USERS BIT GROUP | Selecting usage of user bit of TC. | [0] | Not specified |
| | | | 1 | ISO characters (conforming to ISO 646, 2022) |
| | | | 2 | Undefined |
| | | | 3 | Undefined |
| 407 | PHASE CORRECTION BIT | To activate or not to activate LTC's phase correction bit. | 0 | OFF: Edge direction of the first bit of data block is not fixed. |
| | | | [1] | ON: Edge direction of the first bit of data block is fixed. |
| 410 | AUTO REGEN MODE | Selecting an editing mode and "AUTO REGEN MODE" of 9 pin command is received to effectuate REGENE mode when the TCG SELECT switch on the front panel is set to "PRESET". (D80 and D85 only) | [0] | The set enters REGENE mode when ASSEMBLE or INSERT mode is selected as an editing mode. |
| | | | 1 | The set enters REGENE mode when ASSEMBLE mode is selected as an editing mode. |
| | | | 2 | The set enters REGENE mode when INSERT mode is selected as an editing mode. |
| | | | 3 | The set always enters PRESET mode. |
| 453 | TIME DATA FREEZE | Select either Video and time-data out, when still(stop) button is pressed. | [0] | Output Video signal and time-data at actual stopped position. |
| | | | 1 | Output Video signal and time-data at when STILL(STOP) button is pressed. |
| 509 | WARNING MESSAGE | Turning on/off warning indication when the set enters AUTO OFF mode. | 0 | OFF: Not to indicate. |
| | | | [1] | ON: To indicate. (Warning message is output to all output terminals.) |

**• Technicel terminology**

REPEAT REC (repeated recording): When tape reaches its end in REC mode, the operation mode is automatically shifted to REW mode. As the tape is wound up to its beginning, the mode is moreover shifted to REC mode again.

LONG PAUSE mode: Tape protection function that is automatically activated when the set is left in PAUSE, STILL, STOP or STANDBY-ON mode for a certain period of time.

### 1.7.4 How to store setting of MENU SWITCH

1. Set to the SERVICE MODE and open "0: SERVICE MENU SW" on the display. (Refer to 1.7.2.)
2. Select "EnTEr" by pressing the SELECT button.
3. Press the SET button, and the current setting of the MENU SWITCH (including SERVICE MENU SWITCH) is stored.

### 1.7.5 How to road setting of MENU SWITCH

1. Set to the SERVICE MODE and open "0: SERVICE MENU SW" on the display.
2. Select "CALL" by pressing the SELECT button.
3. Press the SET button to read currently stored setting of MENU SWITCH.

### 1.7.6 How to reset MENU SWITCH to initial setting on shipment

1. Set to the SERVICE MODE and open "0: SERVICE MENU SW" on the display. (Refer to 1.7.2.)
2. Select "RESET" by pressing the SELECT button.
3. Press the SET button, and the MENU SWITCH is restored to the initial status as it was set on shipment.

### 1.7.7 How to save and read EEPROM data

This VTR has a function to save the MECHACON EEPROM data in the SYSCON EEPROM as well as to read stored data. This function is helpful for replacing the MECHACON EEPROM, because it oan be replaced without loss of data on hour meters, etc. For bringing this function in practice, use the SERVICE MODE as mentioned below.

1. Set to the SERVICE MODE and open "3: M/S EEPROM" on the display. (Refer to 1.7.2.)
2. Select "STOrE" or "LOAd" by pressing the SELECT button.
3. Press the SET button to save or read data stored in the MECHACON EEPROM.

### 1.7.6 How to cloar warning rocords

This VTR stores data on the last four warnings. The SERVICE MODE serves to clear those warning records.

1. Set to the SERVICE MODE and open "4: ERROR CLR" on the display. (Refer to 1.7.2.)
2. Press the SET button, and all warning records stored in the memory are cleared.

### 1.7.9 How to display warning records

This VTR stores the last four warning records in the following data format so as to provide the service personnel with details of those warning status that the set fell into in the past.

a) Warning code in four figures
b) Operation mode in which the set fell into the warning status
c) Operation mode preceding to the mode in which the set fell into the warning status
d) Operation button pressed just before the set entered the warning status
e) Hour meter indication (total power activation hours) at the time when the set entered the warning status

The following method makes it possible to access to those respective data.

1. Set to the SERVICE MODE and open "5: ER. CALL 0 TIMES AGO" on the display. (Refer to 1.7.2.)
2. Press the SET button, and data on the last warning status can be seen on the counter display.
3. Press the SELECT button to select a desired data. Every time the SELECT button is pressed, the above mentioned data on the last warning status appears on the display one after another.
4. For examining more dated warnings, turn the JOG dial for the second last, third last and fourth last warnings to show the respective data on the counter display. (Refer to 1.7.1.)

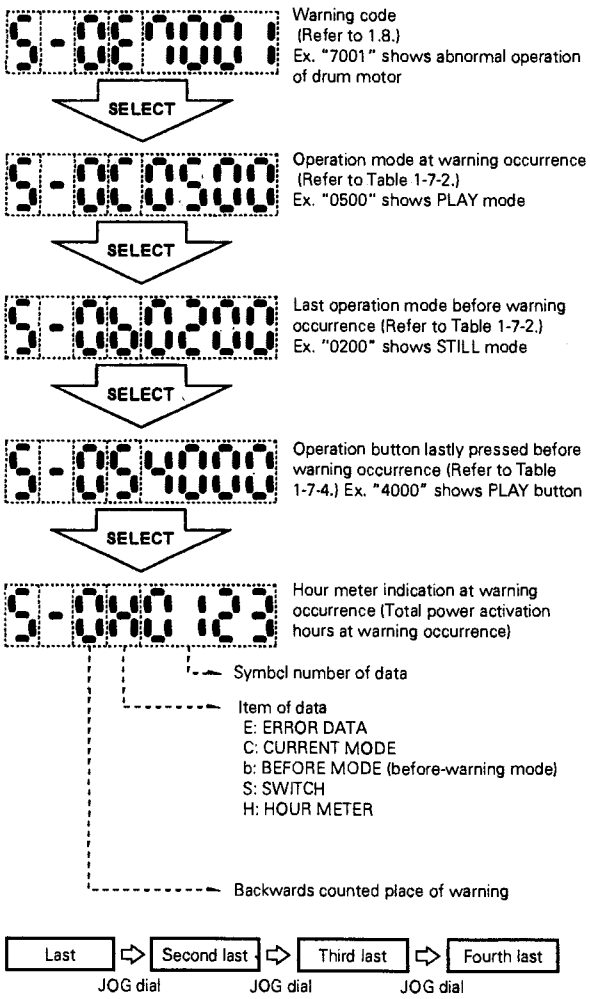


**Fig. 1-7-2 Haw to accass warning records**

**Way of looking into data**

(a) Warning code
Refer to the warning detection circuit (see 1.8).

(b) Operation mode at warning occurrence and before-warning operation mode
One of mode commands used in the set and two bytes data of the mode command are shown on the counter display at a time. When there are more than two bytes data of a mode command, the mode command and data 0 are shown on the counter display are shown in order from MSD to LSD.

**Tablo 1-7-2 Modo data tabla**

| CMD | data | mode | Remarks |
|---|---|---|---|
| 02 | 00 | STILL | |
| 05 | 00 | PLAY | |
| 07 | 00 | NO CASSETTE | |
| 09 | 00 | EJECT | |
| 0B | 00 | STANDBY-OFF | UNLOADING END status |
| 0C | 00 | STANDBY-OFF | PINCH : OFF, DRUM : OFF |
| 0D | 00 | STANDBY-ON | PINCH : ON, DRUM : ON |
| 0F | 00 | DIAGNOSIS | Diagnosis at power ON. |
| 13 | 00 | SKIP FWD | Leader tape skips in FULL LOADING status. |
| 14 | 00 | SKIP REV | |
| 17 | 00 | SLOW FF | FF/REW mode with the counter memory being turned on. |
| 1B | 00 | SLOW REW | |
| 19 | 00 | FAST FF | REEL SEARCH at x100 tape speed. |
| 1A | 00 | FAST REW | |
| 1B | 00 | SHORT FF | Leader tape skips in UNLOADING END status. |
| 1C | 00 | SHORT REW | |
| 80 | *1 | REC | With 1 byte data |
| 81 | 10 | ASSM EDIT | Assenble Edit mode |
| 83 | *2 | SHUTTLE (+) | With speed data |
| 84 | *2 | JOG (+) | With speed data |
| 85 | *2 | VARIABLE (+) | With speed data |
| 86 | *3 | PLAY (+) | With speed data |
| 91 | 10 | INSERT EDIT | Insert Edit mode |
| 93 | *2 | SHUTTLE (–) | With speed data |
| 94 | *2 | JOG (–) | With speed data |
| 95 | *2 | VARIABLE (–) | With speed data |
| 96 | *3 | PLAY (–) | With speed data |
| B3 | *4 | INTAKE | With data indicating the next operation mode |
| B4 | *4 | HALF LOAD | |
| B5 | *4 | HALF UNLOAD | |
| B6 | *4 | LOAD | |
| B7 | *4 | UNLOAD | |

For details of deta (*1 to *4), refer to the following.

**• Data addad to moda command**

*1: Detail of REC mode is expressed by Data 0.
<Data 0>
Example: Data 8010 = REC

| MSD | | | | LSD | | | |
|---|---|---|---|---|---|---|---|
| 7 | 6 | 5 | 4 | 3 | 2 | 1 | 0 |
| | | | REC | | REC PLAY | REC PAUSE | BACK SPACE |

*2: Tape speed is expressed by Data 0 in the following equation.

$$\text{TAPE SPEED} = 10^{\frac{\text{DATA0 [DEC]}}{64} - 2}$$

Example: Data 80 [HEX] = 128 [DEC]

$$\text{TAPE SPEED} = 10^{\frac{126}{64} - 2} = 1$$

*3: Tape speed is expressed by Data 0 in the following equation.

TAPE SPEED =
x 1 (speed) x ( 1 + 0.001 x DATA0 [DEC])

*4: Data on the next mode to follow the current mode are added to those commands, and such data is expressed by Data 0
<Data 0>

| MSD | | | | LSD | | | |
|---|---|---|---|---|---|---|---|
| 7 | 6 | 5 | 4 | 3 | 2 | 1 | 0 |
| | REW | FF | STOP | REC PLAY | REC STILL | | EJECT |

<When DATA 0 is "00 h">
The next operation mode is one ef these modes as shown below.

| | | | | | | |
|---|---|---|---|---|---|---|
| REV | FWD | STILL | PLAY | SHTL REV | SHTL STILL | SHTL FWD |

**(c) Opcration button prossod last in bofora-warning moda**

The operation button that was pressed last in a before-warning mode is expressed by one of key commands used in the set.

**Notc:** Commands concerned with operation buttons don't conform to the JVC BUS standard (VTR's inside bus standard).

**Tablc 1-7-3 Koy command tabla**

| CMD | data | mode | Remarks |
|---|---|---|---|
| 30 | 00 | EJECT KEY | |
| 31 | 00 | STOP KEY | |
| 32 | 00 | FF KEY | |
| 33 | 00 | REW KEY | |
| 34 | 00 | STILL KEY | |
| 37 | 00 | EDIT KEY | |
| 38 | 00 | EDIT STOP KEY | |
| 40 | 00 | PLAY KEY | |
| 41 | 00 | REC + PLAY KEY | |
| 42 | 00 | REC + PAUSE KEY | |
| 45 | 00 | STAND-BY KEY | |
| 88 | *1 | SHTL(+) KEY | With speed deta |
| 89 | *1 | JOG(+) KEY | With speed data |
| 8A | *1 | VAR SRH(+) KEY | With speed data |
| 8B | *2 | PLAY(+) KEY | With speed data |
| 98 | *1 | SHTL(–) KEY | With speed data |
| 99 | *1 | JOG(–) KEY | With speed data |
| 9A | *1 | VAR SRH(–) KEY | With speed data |
| 9B | *2 | PLAY(–) KEY | With speed data |
| 56 | 00 | SLOW FF | RS-422 CMD |
| 57 | 00 | SLOW REW | RS-422 CMD |

*1: Tape speed is expressed by Data 0 in the following equation.

$$\text{TAPE SPEED} = 10^{\frac{\text{DATA6 [DEC]}}{64} - 2}$$

*2: Tape speed is expressed by Data 0 in the following equation.

TAPE SPEED =
x 1 (speed) x ( 1 + 0.001 x DATA0 [DEC])

## 1.9 WARNINO DETECTION CIRCUIT

### 1.9.1 Outline

This VTR has the warning mode. If something abnormal occurs in operation of the VTR, both the counter display and on-screen display indicate it by a warning code and the VTR furthermore enters the AUTO OFF mode at the same time.
In the case the set has entered a warning mode that activates the AUTO OFF mode, any kind of operation is inhibited until the set is turned on again after it is once turned off.
The warning mode can roughly be classified into two groups. The first group activates VTR protection function when there is something abnormal detected in the VTR (warning codes No. 79 and lower these are four-digits indication). The second group warns merely with warning indication when there is something abnormal detected in the VTR (warning codes No. 80 and higher these are six-digits indication).

**Nota:**

- If the MENU switch No. 303: WARNING is set to "DISABLE (1)", the set does not enter the warning mode.
- If the MENU switch No. 343: SUB WARNING is set to "ENABLE (1)", the set does not enter specific warning modes though the MENU switch No. 303 is set to "ENABLE (0)".
- In the case the set has entered the AUTO OFF mode after a warning mode, all operations except turning off the power are disabled until the POWER switch is once turned off and again turned on.

### 1.9.2 Table of warning codes

1. Four-digits indication of warning code (six-digits indication partly)

Since every warning is indicated by four-digits code, detailed information about the warning is shown on the display when the set enters a warning status.

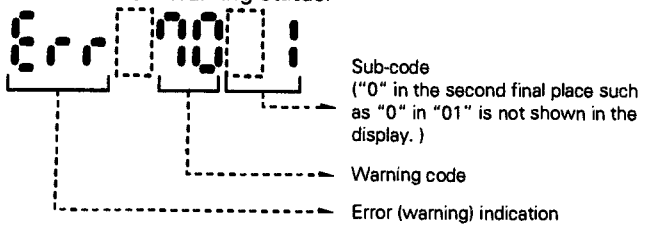


2. Memory of warning records

The set has recorded data on warnings which the set fell into in the past.

(Refer to 1.7.11 Method to call up warning records.)

**• Example of warning indication**

When "Err 70 1" appears on the display as a warning indication by way of example, it expresses that DRUM FG is not detected because the drum motor fails to run for some reason.

Unless otherwise specified, symbol number of a part belongs to the MCTL/SV board.

| Code No. | Werning sensor | Sensing method | Mode/Operation | Cause and Remedy |
|---|---|---|---|---|

01: Disconnection of leader tape detector LED

| | | | | | |
|---|---|---|---|---|---|
| 01 | 01 | Q1 | When pin 38 of IC1 has high level for 240 msec or longer.<br>Normal level at pin 38 of IC1 is 0 V. | AUTO OFF | Replace the LED. |

02: Dew condensation

| | | | | | |
|---|---|---|---|---|---|
| 02 | 01 | Dew sensor (IC2 pin 75)<br>Characteristic of dew sensor<br>Relative humidity / Resistivity<br>75% / 20 kΩ or lower<br>100% / 200 kΩ or higher | When level at pin 75 of IC2 is 3 V or higher.<br>As level at pin 75 of IC2 goes down to 2 V or lower, the warning is cancelled.<br>In the case level at pin 75 of IC2 is between 2 V and 3 V at power activation, warning mode takes place depending on the past set status whether it was in a warning status or not when the power was lastly turned off. | After the cassette tape is ejected, the drum motor automatically starts running.<br>When the drum recovers from the dewed condition, the warning is cancelled and the set is ready for normal operation.<br>During dewed condition, the set doesn't receive any cassette tape. | If the set doesn't recover from the warning status though it has elapsed a considerably long time, it is thinkable that the dew sensor is faulty. |

06: Invalid cassette error

| | | | | | |
|---|---|---|---|---|---|
| 06 | 01 | W. SENSOR SW (IC1-pin 40) | When VHS cassette tape is inserted or level at pin 40 of IC1 is 0V. | The cassette tape is ejected. | When the tape other than Digital-S cassette is inserted.<br>Failure of W. sensor switch. Failure of IC1.<br>Defective wiring between W. sensor switch and MCTL/SV board. |

08: Low supply tension

| | | | | | |
|---|---|---|---|---|---|
| 06 | 01 | Tension sensor (IC2 pin 72) | When level at pin 72 of IC2 is lower than 0.2 V for 500 msec or longer as the mechanism is in the LOADING END status (except STANDBY OFF mode).<br>Normal voltage at pin 72 of IC2 is as follows.<br>In PLAY: 1.85 V approx.<br>In STANDBY OFF: $0^{+0.1}_{-0}$V | AUTO OFF | Abnormal operation of tension servo.<br>Maladjustment of VR1 or VR2. (This case needs to adjust PLAY, LOAD and REV torque.)<br>Failure of reel motor.<br>Something wrong in the tape transport system. |

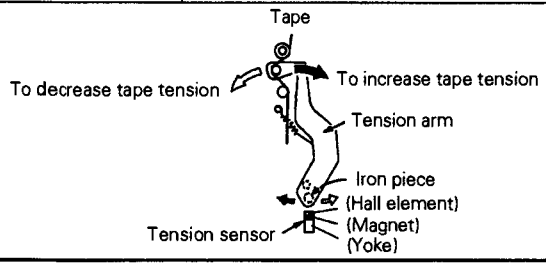


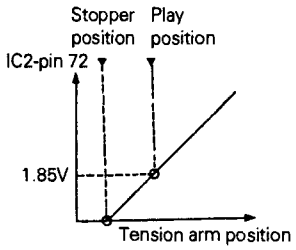

Unless otherwise specified, symbol number of a part belongs to the MCTL/SV board.

| Codo No. | Warning sensor | Sensing method | Mode/Opsration | Cause |
|---|---|---|---|---|

32: Incomplete loading (without warning indication)

| | | | | | |
|---|---|---|---|---|---|
| 32 | 01 | Rotary encoder (CN1-①②③) | When loading does not finish within 8 sec. | After the mechanism once performs the unloading operation, it again enters the loading mode. If the mechanism fails in loading again, it ejects the cassette tape. No warning indication is shown on the display. | Rotary encoder is faulty.<br>Loading motor is faulty.<br>IC16 MDA (TA8406S) is faulty.<br>Failure in loading mechanism.<br>Cassette tape is defective. |
| 32 | 02 | SP REEL FG (IC2 pin 63) | When tape is slacked by 6 cm or longer in loading operation. | | |

**Normal oparation**

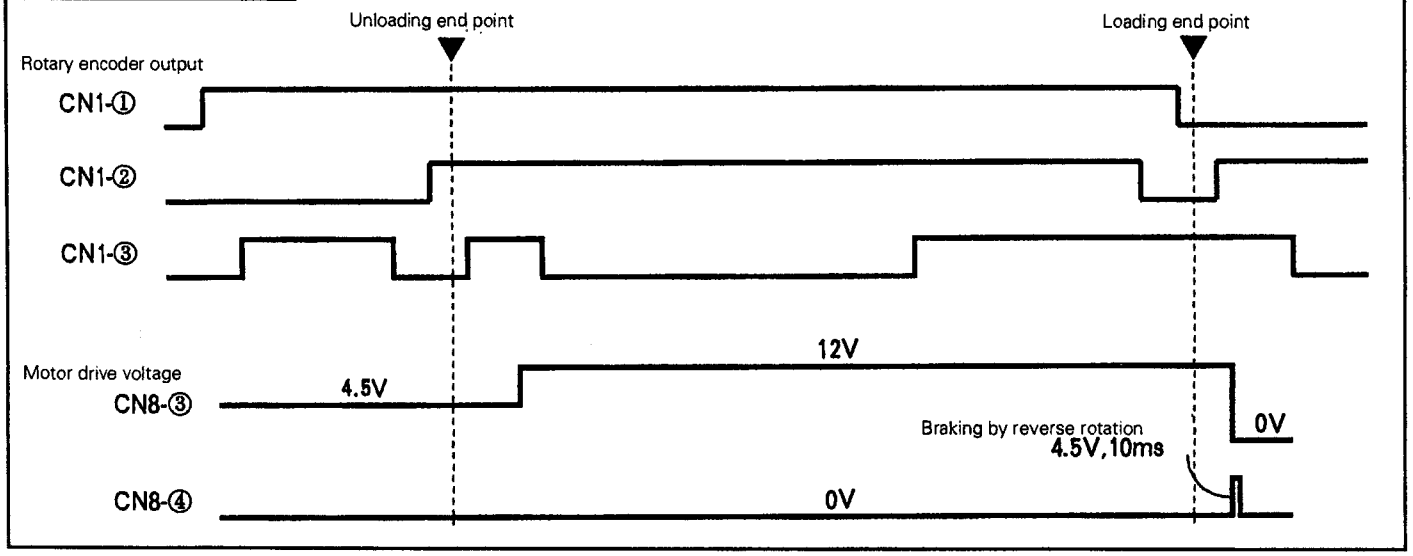


33: Incomplete unloading

| | | | | | |
|---|---|---|---|---|---|
| 33 | 01 | Rotary encoder (CN1-①②③) | When unloading does not finish within 8 sec. | After the mechanism once performs the loading operation, it again enters the unloading mode. If the mechanism fails in unloading again, the set enters the AUTO OFF mode. | Rotary encoder is faulty.<br>Loading motor is faulty.<br>IC16 MDA (TA8405S) is faulty.<br>Failure in loading mechanism.<br>Cassette tape is defective. |
| 33 | 02 | SP REEL FG (IC2 pin 63) | When tape is slacked by 6 cm or longer in unloading operation. | | |

**Normal operation**

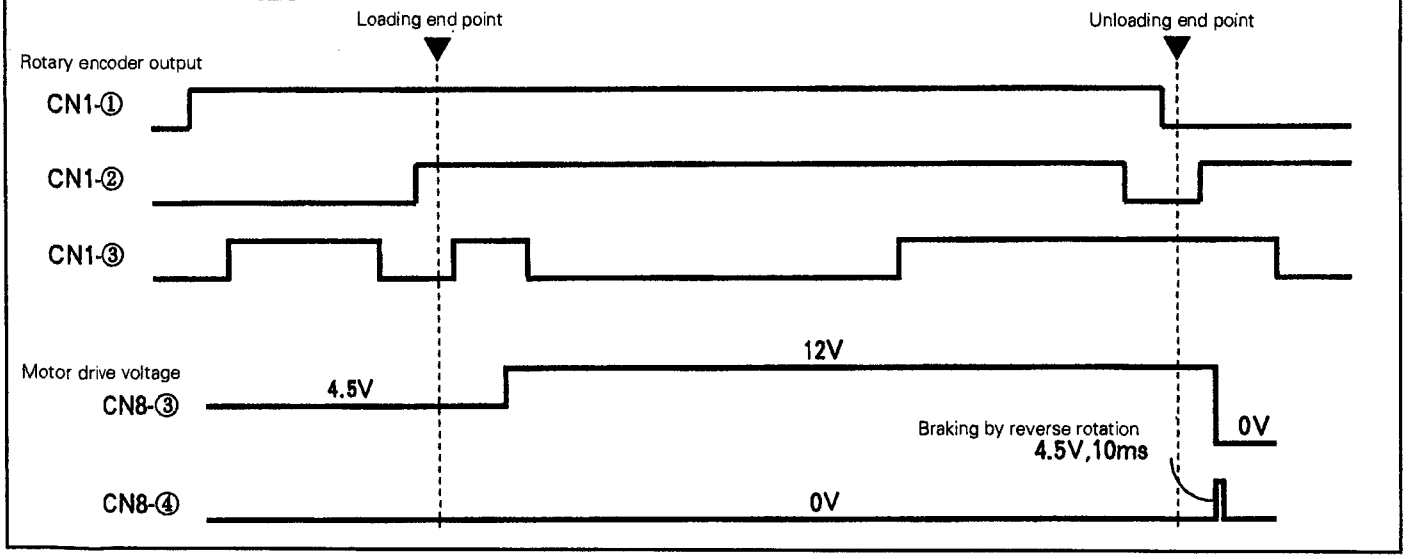

Unless otherwise specified, symbol number of a part belongs to the MCTL/SV board.

| Code No. | Werning eensor | Sensing method | Mode/Operation | Ceuso |
|---|---|---|---|---|

40: Incomplete intake (without warning indication)

| | | | | |
|---|---|---|---|---|
| 40 01 | Cassette switch (CN4-②) Insert switch (CN4-③) | When cassette tape is not taken in within 3 sec. | Cassette tape is ejeoted. No warning indication is shown on the display. | Cassette housing is defective. Failure of IC16 MDA (TA8405S). Cassette or insert switch is faulty. Cassette tape is defective. |

**Normel operetion**

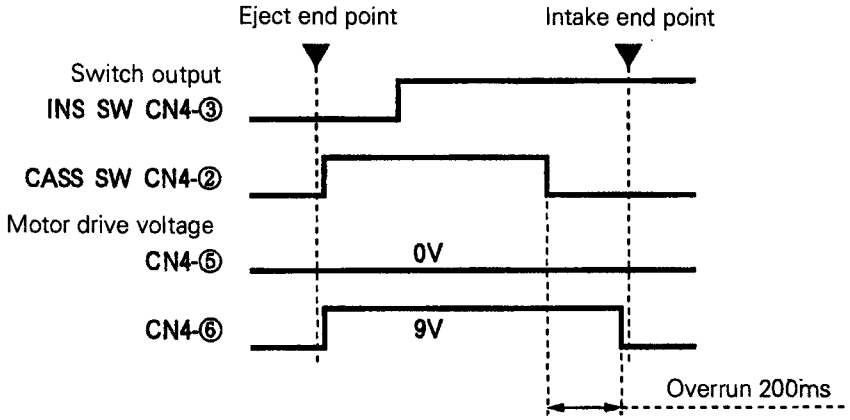


41: Incomplete eject (ejecting operation)

| | | | | |
|---|---|---|---|---|
| 41 01 | Cassette switch (CN4-②) Insert switch (CN4-③) | When cassette tape is not ejected within 3 sec. | After the mechanism once performs intake operation, it tries to eject cassette tape. If the mechanism fails in eject operation again, the set enters the AUTO OFF mode. | Cassette housing is defective. Failure of IC16 MDA (TA8405S). Cassette or insert switch is faulty. Cassette tape is defective. |

**Normal eperation**

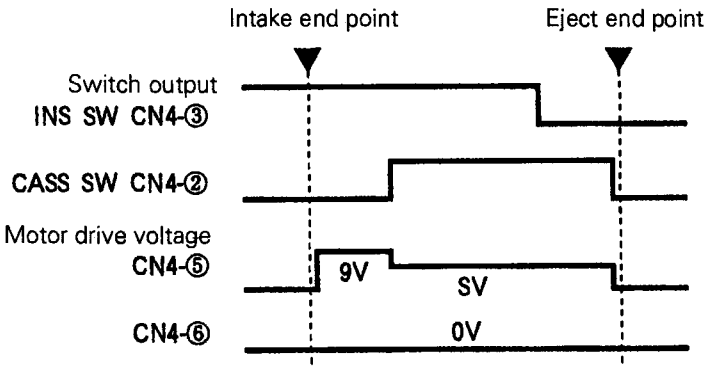

Unless otherwise specified, symbol number of a part belongs to the MCTL/SV board.

| Codo No. | Warning aonaor | Sensing method | Mode/Operation | Cause |
|---|---|---|---|---|

56: Tape deffective

| | | | | |
|---|---|---|---|---|
| 56 01 | SUP REEL FG (IC2pin63) | When supply/take-up reel rotates reverse for 6 cm long of tape in the SHORT FF/REW mode or for 3 cm long of tape in the SKIP FWD/REV mode. | Cassette tape is ejected. | Failure in reel servo circuit. Defective wiring between MCTL/SV board and reel motor. |
| 56 02 | TU REEL FG (IC2pin62) | | | |
| 56 03 | SUP REEL FG (IC2pin53) | When the reel motor runs at a high speed exceeding the limit and 40 or more FG pulses are output within 1 sec with cassette tape being inserted. High speed exceeding the limit means:6 times/0.8 as fast as the normal when pinch roller is on, 60 times/0.6 as fast as the normal when pinch roller is off. Each speed can be found from winding diameter of tape and number of REEL FG pulses. | Cassette tape is ejected. | Failure in reel servo circuit. Defective wiring between MCTL/SV board and reel motor. |
| 56 04 | TU REEL FG (IC2pin62) | | | |
| 56 05 | Tape begin sensor (IC1 pin 37) Tape end sensor (IC1 pin 36) | When both tape begin and tape end are detected at the same time for 500 msec or longer in a mode other than loading and unloading though cassette tape is inserted. In normal operation, sensor output is 3.5 V or higher. | Cassette tape is ejected. | Failure in tape begin sensor and tape end sensor. Leader tape sensor LED is abnormally orientated. |
| 56 06 | SUP REEL FG (IC2pin63) | When the supply reel runs for 7 rounds or more in the unloading mode. (120 pulses of SUP REEL FG are output for a pericd cf one round of the supply reel.) | Cassette tape is ejected. | Failure in reel servo circuit. Defective wiring between MCTL/SV board and reel motor. |
| 56 07 | SUP REEL FG (IC2pin63) | When the supply reel runs for 5 rounds or more in the loading mode. (120 pulses of SUP REEL FG are output for a period of one round of the supply reel.) | Cassette tape is ejected. | Failure in reel servo circuit. Defective wiring between MCTL/SV board and reel motor. |

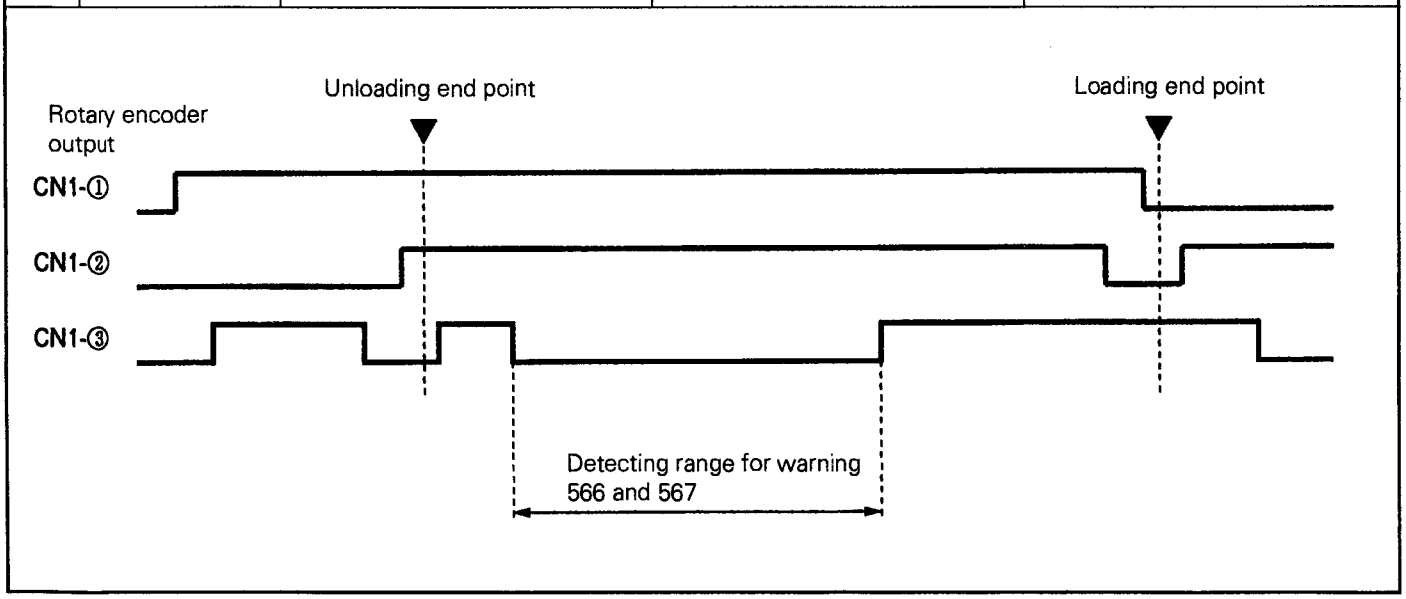

Unless otherwise specified, symbol number of a part belongs to the MCTL/SV board.

| Code No. | Warning eensor | Sensing method | Mode/Operation | Cause |
|---|---|---|---|---|

57: Tape end detecting

| | | | | |
|---|---|---|---|---|
| 57 01 | Tape end senser (IC1 pin 36) | When leader tape cannot be taken up into the cassette within 3 sec in the SHORT REW mode. In nermal operation, tape end sensor output is: 3.5 V or higher for recording portion of tape, 1.5 V or lower for leader portion. | Cassetta tape is ejected. As cassette tape is inserted again, warning indication disappears frem the display. | Failure in reel servo circuit. Failure of tape end sensor. Leader tape detector LED is abnormally orientated. Cassette tape is defective. |
| 57 02 | Tape end sensor (IC1 pin 36) | When leader tape cannot be taken up into the cassette within 3 sec in the SKIP REV mode. | | |

58: Tape begin detecting

| | | | | |
|---|---|---|---|---|
| 58 01 | Tape begin sensor (IC1 pin 37) | When leader tape cannet be taken up into the cassette within 3 sec in the SHORT FF mode. In nermal operatien, tape begin sensor output is: 3.5 V or higher for recording portion of tape, 1.5 V or lewer for leader portion. | Cassette tape is ejected. As cassette tape is inserted again, warning indication disappears from the display. | Failure in reel servo circuit. Failure of tape begin sensor. Leader tape detector LED is abnormally orientated. Cassette tape is defective. |
| 58 02 | Tape begin sensor (IC1 pin 37) | When leader tape cannot be taken up into the cassette within 3 sec in the SKIP FWD mode. | | |

70: Drum motor failure

| | | | | |
|---|---|---|---|---|
| 70 01 | DRUM FG (IC2 pin 65) | When DRUM FG is not output for 2 sec or lenger in the mode that the drum motor must run. | AUTO OFF | Defective wiring between MCTL/SV board and drum motor. Failure in drum servo circuit. Failure of drum motor. |

71: Capstan motor failure

| | | | | |
|---|---|---|---|---|
| 71 01 | CAPSTAN FG (IC2 pin 64) | When CAPSTAN FG signal (CAPx2 FG) is net eutput fer 1 sec er longer in PLAY, CAPSTAN SEARCH, or REC mode. | AUTO OFF | Defective wiring between MCTL/SV board and capstan motor. Failure in capstan servo circuit. Failure of capstan motor. |

Unless otherwise specified, symbol number of a part belongs to the MCTL/SV board.

| Code No. | Werning eeneor | Sensing method | Mode/Operetion | Ceuse |
|---|---|---|---|---|
| 72: Supply reel motor failure | | | | |
| 72 01 | CAPSTAN FG (IC2pin64) SUP REEL FG (IC2pin63) | **Sleek in tepe** When the supply reel is not running though the capstan motor is running. (When no pulse of SUP REEL FG is output though 2304 or more pulses of CAPSTAN FG is output.) | AUTO OFF | Failure in reel servo circuit. Defective wiring between MCTL/SV board and reel motor. Failure of reel motor. |
| 72 02 | SUP REEL FG (IC2pin63) | **Reel lock** When no SUP REEL FG is output within a certain period (4 sec at minimum to 12 sec at maximum) determined by winding diameter of tape. | AUTO OFF | Failure in reel servo circuit. Defective wiring batween MCTL/SV board and reel motor. Failure of reel motor. |
| 72 03 | SUP REEL FG (IC2pin63) | **Reverse rotetion of reel** When the reel reverse rotates for 3 cm long (or more) of tape in a mode other than SHORT FF/REW and SKIP FWD/REV. (Tape length can be found from winding diameter of tape and number of REEL FG pulses.) | AUTO OFF | Failure in reel servo circuit. Defective wiring between MCTL/SV board and reel motor. Failure of reel motor. |
| 72 04 | SUP REEL FG (IC2pin63) | **Overrun of reel** When the reel motor runs at a high speed exceeding the limit (100 = 60/0.6 times as fast as the normal speed) without cassette boing inserted and 40 or more pulses of SUP REEL FG are output within 1 sec. | AUTO OFF | Failure in reel servo circuit. Defective wiring between MCTL/SV board and reel motor. Failure of reel motor. |
| 72 05 | SUP REEL FG (IC2pin63) | **Abnormel operetion of reel** When the supply reel turns less than half a round in the unloading mode. (120 pulses of SUP REEL FG are output in a period of one round of the supply reel.) | AUTO OFF | Failure in reel servo circuit. Defective wiring between MCTL/SV board and reel motor. Failure of reel motor. |
| 72 06 | SUP REEL FG (IC2pin63) | **Abnormel operetion of reel** When the supply reel turns less than half a round in the loading mode. (120 pulses of SUP REEL FG are output in a period of one round of the supply reel.) | AUTO OFF | Failure in reel servo circuit. Defective wiring between MCTL/SV board and reel motor. Failure of reel motor. |

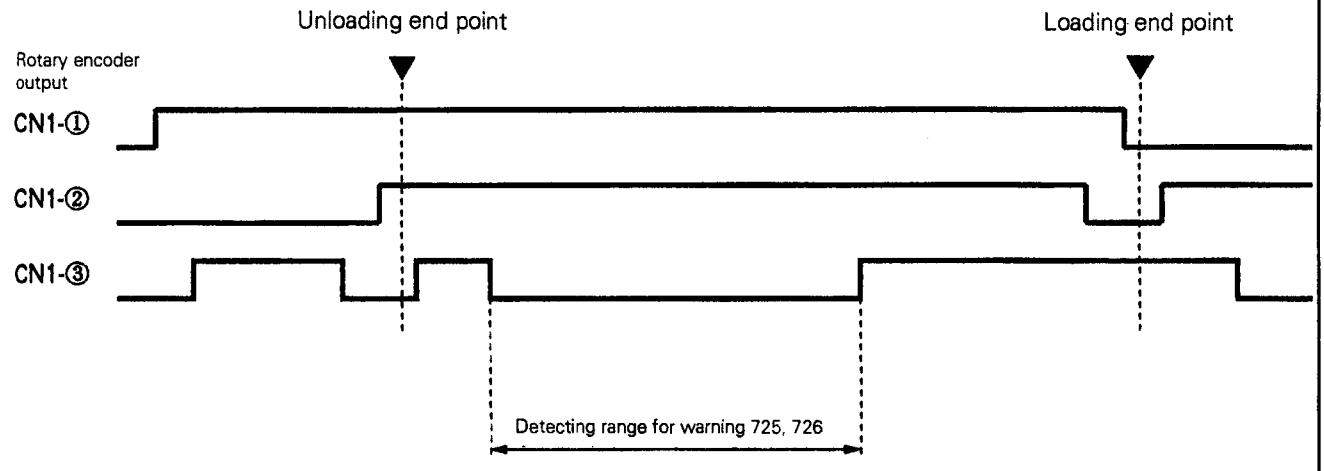

Unless otherwise specified, symbol number of a part belongs to the MCTL/SV board.

| Codo No. | Warning aensor | Sensing method | Mode/Operation | Cause |
|---|---|---|---|---|

73: Take-up reel motor failure

| | | | | |
|---|---|---|---|---|
| 73 01 | CAPSTAN FG (IC2 pin 04) TU REEL FG (IC 2 pin 62) | **Slsck in tape** When the take-up reel is not running though the capstan motor is running. (When no pulse of TU REEL FG is output though 2304 or more pulses of CAPSTAN FG is output.) | AUTO OFF | Failure in reel servo circuit. Defective wiring between MCTL/SV board and reel motor. Failure of reel motor. |
| 73 02 | TU REEL FG (IC 2 pin 62) | **Rsel leck** When no TU REEL FG is output within a cartain period (4 sec at minimum to 12 sec at maximum) determined by winding diameter of tape. | AUTO OFF | Failure in reel servo circuit. Defective wiring between MCTL/SV board and reel motor. Failure of reel motor. |
| 73 03 | TU REEL FG (IC 2 pin 62) | **Reverse retstien ef reel** When the reel revèrse rotates for 3 cm long (or more) of tape in a mode other than SHORT FF/REW and SKIP FWD/REV. | AUTO OFF | Failure in reel servo circuit. Defective wiring between MCTL/SV board and reel motor. Failure of reel motor. |
| 73 04 | TU REEL FG (IC 2 pin 62) | **Overrun ef reel** When the reel motor runs at a high speed axceeding the limit (100 = 60/0.6 times as fast as the normal speed) without cassette being inserted and 40 or more pulses of TU REEL FG are output within 1 sec. | AUTO OFF | Failure in reel servo circuit. Defective wiring between MCTL/SV board and reel motor. Failure of reel motor. |
| 73 05 | TU REEL FG (IC 2 pin 62) | **Winding dismeter ef tspe csnnet be sensed.** When the take-up reel does not run for a quarter of round within 3 sec in the tape winding diameter sensing mode just after cassette tape is taken in. | AUTO OFF | Failure in reel servo circuit. Defective wiring between MCTL/SV board and reel motor. Failure of reel motor. |

80: CPU BUS failure

| | | | | |
|---|---|---|---|---|
| 80 01 80 | SYSCON CPU (SYS/TC IC103-pin 12) | When error occurs in communication with 9-PIN CPU. | Warning only | Failure in 9-PIN CPU (SYS/TC IC114, 119). Failure in JVC BUS line. |
| 80 02 00 | SYSCON CPU (SYS/TC IC103-pin 14) | When error occurs in communication with MCTL/SV CPU. | Warning only | Failure in MCTL/SV CPU (IC2). Failure in JVC BUS line. |
| 80 03 00 | SYSCON CPU (SYS/TC IC103-pin 15) | When error occurs in communication with PV CPU. | Warning only | Failure in PV CPU (PV PRO IC402). Failure in JVC BUS line. |
| 80 04 00 | SYSCON CPU (SYS/TC IC103-pin 16) | When error occurs in communication with OPERATION CPU. | Warning only | Failure in OPERATION CPU (OPE. IC1). Failure in JVC BUS line. |
| 80 05 00 | SYSCON CPU (SYS/TC IC103-pin 17) | When error occurs in communication with TIME CODE CPU. | Warning only | Failure in TIME CODE CPU (SYS/TC IC501). Failure in JVC BUS line. |
| 80 08 00 | SYSCON CPU (SYS/TC IC103-pin 18) | When error occurs in communication with AUDIO CPU. | Warning only | Failure in AUDIO CPU (DIG AUD IC21). Failure in JVC BUS line. |
| 80 07 00 | SYSCON CPU (SYS/TC IC103-pin 19) | When error occurs in communication with RF CPU. | Warning only | Failure in RF CPU (RF PRO IC17). Failure in JVC BUS line. |

Unless otherwise specified, symbol number of a part belongs to the MCTL/SV board.

| Codo No. | Warning aensor | Sensing method | Mode/Operation | Cauae |
|---|---|---|---|---|
| 81: $I^2C$ BUS failure with digital processing ICs | | | | Symbol numbers are located on PV PROCESS board |
| 81 01 06 | PV REC CPU (PV PRO. IC401) | When error occurs in communication with DCI-R. | Warning only | Failure in PV PROCESS board. Failure in DCI-R (IC16). |
| 81 02 00 | PV REC CPU (PV PRO. IC401) | When error occurs in communication with ECC-R1. | Warning only | Failure in PV PROCESS board. Failure in ECC-RI (IC12). |
| 81 03 00 | PV REC CPU (PV PRO. IC401) | When error occurs in communication with ECC-R2. | Warning only | Failure in PV PROCESS board. Failure in ECC-R2 (IC14) |
| 81 04 00 | PV REC CPU (PV PRO. IC401) | When error occurs in communication with SHUFF-R. | Warning only | Failure in PV PROCESS board. Failure in SHUFF-R (IC3) |
| 81 05 00 | PV REC CPU (PV PRO. IC401) | When error occurs in communication with AUDIO-R1. | Warning only | Failure in PV PROCESS board. Failure in AUDIO-R1 (IC304) |
| 81 06 00 | PV REC CPU (PV PRO. IC401) | When error occurs in communication with AUDIO-R2. | Warning only | Failure in PV PROCESS board. Failure in AUDIO-R2 (IC305) |
| 81 07 00 | PV PB CPU (PV PRO. IC402) | When error occurs in communication with DCI-P. | Warning only | Failure in PV PROCESS board. Failure in DCI-P (IC31) |
| 81 08 00 | PV PB CPU (PV PRO. IC402) | When error occurs in communication with ECC-P1. | Warning only | Failure in PV PROCESS board. Failure in ECC-P1 (IC40) |
| 81 09 00 | PV PB CPU (PV PRO. IC402) | When error occurs in communication with ECC-P2. | Warning only | Failure in PV PROCESS board. Failure in ECC-P2 (IC42) |
| 81 10 00 | PV PB CPU (PV PRO. IC402) | When error occurs in communication with SHUFF-P. | Warning only | Failure in PV PROCESS board. Failure in SHUFF-P (IC55) |
| 81 11 00 | PV PB CPU (PV PRO. IC402) | When error occurs in communication with AUDIO-P1. | Warning only | Failure in PV PROCESS board. Failure in AUDIO-P1 (IC313) |
| 81 12 00 | PV PB CPU (PV PRO. IC402) | When error occurs in communication with AUDIO-P2. | Warning only | Failure in PV PROCESS board. Failure in AUDIO-P2 (IC316) |
| 82: EEPROM failure | | | | |
| 82 01 00 | SYSCON CPU (SYS/TC IC103-pin 5) | When error occurs in communication with SYSCON EEPROM. | Warning only | Failure in SYSCON EEPROM (SYS/TC IC109). Defective board pattern of SYS/TC board. |
| 82 02 00 | MCTL/SV CPU (IC2-pin 57) | When error occurs in communication with MECHA/SERVO EEPROM. | Warning only | Failure in EEPROM (IC8). Defective board pattern. |
| 82 03 00 | OPERATION CPU (OPE.IC1-pin 37) | When error occurs in communication with OPERATION EEPROM. | Warning only | Failure in OPERATION EEPROM (OPERATION IC10). Defective pattern of OPERATION board. |
| 82 04 00 | AUDIO CPU (AUDIO IC21-pin 31) | When error occurs in communication with AUDIO EEPROM. | Warning only | Failure in AUDIO EEPROM (DIG AUD IC22). Defective pattern of DIG AUD beard. |
| 82 05 00 | RF CPU (RF PRO. IC17-pin 37) | When error occurs in communication with RF EEPROM. | Warning only | Failure in RF EEPROM (RF PROCESS-1, -2, IC9) Defective pattern of RF PRO-1, -2 board. |
| 84: Abnormal SYSCON REFERENCE signal | | | | |
| 84 01 00 | SYSCON CPU (SYS/TC IC103-pin 72) | When SERVO REFERENCE signal is abnormally input. | Warning only | Failure in MCTL/SV board. Defective wiring between SYS/TC and MCTL/SV boards. |
| 85: Abnormal MCTL/SV REFERENCE signal | | | | |
| 85 01 00 | MCTL/SV CPU (IC2) | When FRP REFERENCE signel is abnormally input. | Warning only | Failure in MCTL/SV board. Defective pattern of MCTL/SV board. |
| 86: Abnormal TC REFERENCE signal | | | | |
| 86 01 00 | TC CPU (SYS/TC IC501-pin 67) | When REF FIELD signal is abnormally input. | Warning only | Failure in MCTL/SV board. Defective wiring between SYS/TC and MCTL/SV boards. |

Unless otherwise specified, symbol number of a part belongs to the PV PROCESS board.

| Code No. | Werning sensor | Sensing method | Mode/Operstion | Cause |
|---|---|---|---|---|

91 XY 00 : Abnormal digital video input/output (DIG I/O)
(Warning in this category is indicated by the warning code "91" with sub-data "XY" and "00" each.
Each sub-data "XY" and "00" which are expressed in a hexadecimal number is converted into a binary number. In a converted binary number, the bit equivalent to "1" specifies the warning in detail as shown in the table below.

| | | | | | |
|---|---|---|---|---|---|
| Y Lowor 4bits | 0 | PV PB CPU (PV PRO. IC402) | The type of DIG I/O board is<br>1 : For Player (SA-D50)<br>0 : For Recorder (SA-D80) | Warning only | Mismatch the DIG I/O board. |
| | 1 | PV PB CPU (PV PRO. IC402) | When output data H and V CLK from OUT GEN boerd to DIG I/O board is absent. | Warning only | No output data. (CN1-25A to 32B)<br>Defective wiring between OUT GEN board and DIG I/O board. |
| | 2 | PV PB CPU (PV PRO. IC402) | The input signal of DIG I/O board from OUT GEN board is<br>1 : 625/50,<br>0 : 525/60 | Warning only | When the input signal is 525/60. |
| | 3 | PV PB CPU (PV PRO. IC402) | When signal format is different.<br>When SA-D50 is installed this bit is always "0". | Warning only | Composite serial digital signal is input. (Check input signal.) |
| X Upper 4bits | 4 | PV PB CPU (PV PRO. IC402) | When input data is absent.<br>When SA-D50 is installed this bit is always "0". | Warning only | No input data.<br>Defective wiring between input terminal and DIG I/O board. |
| | 5 | PV PB CPU (PV PRO. IC402) | When signel input is abnormal.<br>Header parity error is occured.<br>When SA-D50 is installed this bit is always "0". | Warning only | Abnormal input data.<br>Defective wiring between input terminal and DIG I/O board. |
| | 6 | PV PB CPU (PV PRO. IC402) | When input signal is not locked.<br>When SA-D50 is installed this bit is always "0". | Warning only | Abnormal input data.<br>Defective wiring between input terminal and DIG I/O board. |
| | 7 | PV PB CPU (PV PRO. IC402) | The line standard signal of DIG I/O board is<br>1 : 625/50<br>0 : 525/60<br>When SA-D50 is installed this bit is always "0". | Warning only | When the input signal is 525/60. |

C0 XY VW : Malfunction of mechanism (without cassette tape inserted)
(Warning in this category is activated when "DIAG WARNING" is on, and is indicated by the warning code "C0" with subdata "XY" and "VW" each.)
Each sub-data "XY" and "VW" which are expressed in a hexadecimal number is converted into a binary number. In a converted binary number, the bit equivalent to "1" specifies the warning in detail as shown in the table below.

| | | | | |
|---|---|---|---|---|
| Y Lowor 4bits | 0 | Disconnection of leader tape detector LED. (same as warning 01) | The set can not insert a cassette tape. | Same as warning 01. |
| | 1 | Drum is dewed. (same as warning 02) | The set can not insert a cassette tape. | Same as warning 02. |
| | 2 | Supply reel motor is abnormal. (same as warning 72) | The set can not insert a cassette tape. | Same as warning 72. |
| | 3 | Take-up reel motor is abnormal. (same as warning 73) | The set can not insert a cassette tape. | Same as warning 73. |
| X Upper 4bits | 4 | Reel solenoid is abnormal. | The set can not insert a cassette tape. | Failure of reel solenoid.<br>Defective wiring between reel motor and REEL MDA board. |
| | 5 | Drum motor is abnormal. (same as warning 70) | The set can not insert a cassette tape. | Same as warning 70. |
| | 6 | Capstan motor is abnormal. (same as warning 71) | The set can not insert a cassette tape. | Same as warning 71. |
| | 7 | Weak supply tension. (same as warning 0B) | The set can not insert a cassette tape. | Same as warning 0B. |

| | | | | |
|---|---|---|---|---|
| W Lower 4bits | 0 | Failure in loading. (same as waring 32) | The set can not insert a cassette tape. | Same as "warning : 32" |
| | 1 | Failue in unloading. (same as warning 33) | The set can not insert a cassette tape. | Same as "warning : 33" |
| | 2 | Always 0 | — | — |
| | 3 | Always 0 | — | — |
| V Upper 4bits | 4 \| 7 | Always 0 | — | — |

| Code No. | Warning sensor | Sensing method | Mode/Operation | Cause |
|---|---|---|---|---|

C1 XY VW : Malfunction of mechanism (cassette tape inserted)
(Warning in this category is activated when "DIAG WARNING" is on, and is indicated by the warning code "C1" with subdata "XY" and "VW" each.)
Each sub-data "XY" and "VW" which are expressed in a hexadecimal number is converted into a binary number. In a converted binary number, the bit equivalent to "1" specifies the warning in detail as shown in the table below.

| | | | | |
|---|---|---|---|---|
| Y Lowor 4bits | 0 | In complete intake (same as warning 40) | Warning only | Same as warning 40. |
| | 1 | Tape begin detecting (same as warning 58) | Warning only | Same as warning 58. |
| | 2 | Tape end detecting (same as warning 57) | Warning only | Same as warning 57. |
| | 3 | Supply reel motor failure (same as warning 72) | Warning only | Same as warning 72. |
| X Upper 4bits | 4 | Take-up reel motor failure (same as warning 73) | Warning only | Same as warning 73. |
| | 5 | Failure in loading (same as warning 32) | Warning only | Same as warning 32. |
| | 6 | Pinch roller failure | Warning only | Failure of pinch roller solenoid. |
| | 7 | Failure in unloading (same as warning 33) | Warning only | Same as warning 33. |

| | | | | |
|---|---|---|---|---|
| W Lower 4bits | 0 | Incomplete eject (same as warning 41) | Warning only | Same as warning 41. |
| | 1 \| 3 | Always 0 | — | — |
| V Upper 4bits | 4 \| 7 | Always 0 | — | — |

Detail of error is expressed by 2-bytes code. Namely, error code is converted into binary number, and the bit equivalent to "1" expresses the error in detail.
Example: Error code is "21 00".
Error code 1 ... "21"
Error code 2 ... "00"
If error sub-code is converted into binary number according to the table below, bit 7 is equivalent to bit 0 in binary number.
Error code 1 ... "0010 0001"
Error code 2 ... "0000 0000"

| Hexadecimal number | 0 | 1 | 2 | 3 | 4 | 5 | 6 | 7 |
|---|---|---|---|---|---|---|---|---|
| Binary number | 0000 | 0001 | 0010 | 0011 | 0100 | 0101 | 0110 | 0111 |
| Hexadecimal number | 8 | 9 | A | B | C | D | E | F |
| Binary number | 1000 | 1001 | 1010 | 1011 | 1100 | 1101 | 1110 | 1111 |

## 1.9 TEST MODE

This VTR has the test mode to be used as the exclusive mode for adjustment.

### 1.9.1 How to open test mode

1. Take cassette tape out of the set and turn off the power switch.
2. Turn on the power switch again, and press

   COUNTER RESET + FF + REW

   buttons together within 2 seconds after the counter display is lighted up.
3. Both the on-screen display and counter display show the TEST MODE.
4. Select a desired mode by pressing the MENU (UP) or SET (DOWN) button.
5. Press the COUNTER RESET button to execute the mode being selected on the display.
6. When the automatic adjustment mode is selected, the set starts automatic adjustment with "Perform" indication (P∗∗++) on the display. When "Perform" indication disappears from the display, the automatic adjustment is complete. If the COUNTER RESET button is pressed prior to completion of automatic adjustment, the automatic adjustment is compulsively finished. (No adjustment value is memorized in this case.)
7. In the manual adjustment mode, press the SELECT button after setting adjustment values to fix and store those setting values. (Adjustment values set in the manual adjustment mode are not stored in the memory unless the SELECT button is pressed.)
8. For quitting the LEVEL marker output mode, press the COUNTER RESET button.
9. To close the TEST MODE, turn the power OFF.

**Notes:** • When the MENU switch No. 357 "DIAG AT POWER ON" or No. 002 "OPERATION LOCK" is set to "ON(1)", it is inhibited to open the TEST MODE.

**Table 1-9-1 Table of test modes**

| On-scroon display | Mode | VTR operation | Remark |
|---|---|---|---|
| 50 : AU LINE OUT LV. (M) | Audio out level adjustment | Adjusting AUDIO OUT level | 3.9 ADJUSTMENT OF AUDIO CIRCUIT |
| 58 : SEARCH AU INSP. (M) | Search audio check | Output the search audio to AUDIO OUT in PLAY (X1) mode | |
| 5D : RELL CAP FG. (A) | REEL/CAP FG automatic adjustment | Adjusting the FG duty | 3.2.1 Motor FG duty adjustment |
| 5E : CTL HIGHT (M) | A/C head height adjustment | Recording CTL signal only | |
| 5F : REV TENSION (M) | REV tension edjustment | Playback in REV (-X1) mode | 2.7.2.4 Reverse torque adjustment |
| 60 : FWD TENSION (M) | FWD tension adjustment | Normal playback | 2.7.2.1 Supply torque adjustment |
| 61 : LOAD TORQUE (M) | Loading torque adjustment | Tape running in loading torque | 2.7.2.2 Loading torque adjustment |
| 62 : PLAY TORQUE (M) | PLAY torque adjustment | Normal playback | 2.7.2.3 Take-up torque adjustment |
| 63 : LOW TORQUE (M) | Emergency roll | To be low torque as reel torque | 1.5 MANUAL EJECTION OF CASSETTE TAPE IN AN EMERGENCY |
| 64 : SW POINT (A) | Automatic switching point adjustment | Setting the best switching point | 3.2.4 PB switching point adjustment |
| 65 : LOAD/UNLOAD (M) | Loading/unloading | Loading/unloading with JOG dial | Inactivated with tape loaded |
| 66 : MODE MOTOR (M) | Mode motor rotating | Rotating the mode motor with JOG dial | Inactivated with tape loaded |
| 67 : X DISTANCE (M) | X-value adjustment | Enable to playback the adjustment tape | 2.8.2 X-value adjustment |
| 68 : TRACKING (A) | Automatic tracking adjustment | Setting the best tracking position | 3.2.3 Tracking preset adjustment |
| 69 : VHS TAPE PB (M) | Playback of VHS tape | Playback of VHS tape is activated | For tape transport system adjustment |
| 6A : LINEARITY (A) | Automatic linearity measuring mode | Activated automatic linearity measuring mode | No indication. Activated by RS-232C control only. |
| 6F : RF CLK 1/2 (M) | 1/2-divided clock | Recording 1/2-divided clock of RF clock | D80 and D85 set only (3.3.4 1 + D adjustment) |
| 70 : RF CLK 1/4 (M) | 1/4-divided clock | 1/4 | D80 and D85 only |
| 71 : RF CLK 1/8 (M) | 1/8-divided clock | 1/8 | D80 and D85 only |
| 72 : RF REC C&F (A) | Automatic REC current adjustment | Setting the best REC current value | D80 and D85 only (3.4.1 REC current adj.) |
| 78 : LEVEL MARK1 (M) | Level marker output 1 | Mix the level maker 1 in VIDEO OUT | Y level : 100%, Cclcr level: 100 %, Setup level: 0 % |
| 79 : LEVEL MARK2 (M) | Level marker output 2 | Mix the level maker 2 in VIDEO QUT | Y level : 100%, Color level: 75 %, Setup level: 0 % |
| 7A : 8LACK BURST (M) | Black burst output 1 | Output the black burst | Setup level : 0% |
| 7B : Y TIMING (M) | Y signal timing adjustment | Save the adjustment data in EEP-ROM | 3.6.8 SYNC phase adjustment |
| 7C : CPN C TIMING (M) | Component C signal timing adjustment | Save the adjustment data in EEP-ROM | 3.7.2 Component signal output delay adjustment |
| 7D : CPS C TIMING (M) | Composite C signal timing adjustment | Save the adjustment data in EEP-ROM | 3.7.9 Y/C color delay adjustment |
| 7E : BBOUT & MARK1 (M) | Black burst output 2 | Mix the level maker 1 and black burst in VIDEO OUT | Test mode No. 78 + No. 7A |
| 84 : TR METER (A) | Automatic TR meter adjustment | Correcting sensitivity of tracking meter | 3.11.1 Tracking meter adjustment |
| 85 :TR VR PRESET(A) | Automatic TR VR preset adjustment | Correcting center position of tracking VR | 3.3.2 Tracking VR preset adjustment |

(A): Automatic adjustment, (M): Manual adjustment

## 1.10 SELF-DIAGNOSIS MODE

This VTR has a self-diagnosis function as the self-diagnosis mode to diagnose the VTR condition.

**Notos:** • When the MENU switch No. 357 "DIAG AT POWER ON" or No. 002 "OPERATION LOCK" is set to "ON(1)", it is inhibited to open the SELF-DIAGNOSIS MODE.

### 1.10.1 How to open solf-diagnosis mode

1. Remove cassette tape from the VTR and turn it off.
2. Turn on the VTR again, and press

   EJECT + PLAY

   buttons simultaneously within 2 seconds after the counter display is turned on.

<On-screen display>

9P : %% MS : %% PV : %% OP : %%
TC : %% AU : %% RF : %%

11 : M / S TR DATA
** 00 00
NO CASSETTE
TC 00:00:00:00

Notes: • "%%" shows rate (in percentage) of error occurrence between the SYSCON CPU and slave CPU. For normal sets, rate indication is below 50 percent.
• "***" shows message as below.
EX. P: under diagnosis, ED: finish, ER: error occurrence

**Fig. 1-10-1 Display in solf-diagnosis mode**

3. Both the on-screen display and counter display turn into the self-diagnosis display mode.
4. Press the MENU (UP) button or SET (DOWN) button to select a desired self-diagnosis mode.
5. Press the COUNTER RESET button to execute the self-diagnosing.
6. When there is something abnormal detected by the self-diagnosis, an error message appears on both the displays.
7. There are two kinds of self-diagnosis modes; one automatically finishes after execution of self-diagnosis and the other needs to press the SELECT button to finish the mode.
8. To close the self-diagnosis mode as a whole, turn off the VTR.

### 1.10.2 Explanation of error messages

When there is something abnormal detected by self-diagnosis, such an error message as shown by the following example appears on the display. This case shows that a trouble expressed by the sub-code "0100" (failure of leader tape detecting LED) occurs is detected by the self-diagnosis mode "12: MECHACHECK - NO CAS".

<On-screen display>

9P : %% MS : %% PV : %% OP : %%
TC : %% AU : %% RF : %%

12 : MECHACHECK-NO CAS
ER 01 00
NO CASSETTE
TC 00:00:00:00

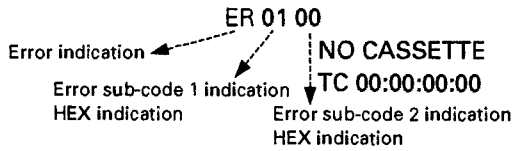


**Fig. 1-10-2 Error message display (Example)**

**Table 1-10-1 Self-diagnosis table**

| On-screen display | Detail of self-diagnosis | Finishing manner | How to cope with error | Remark |
|---|---|---|---|---|
| 11 : M/S TR DATA | Display of actual tracking data. | Automatic finish | Refer to 1.10.11. | |
| 12 : MECHACHECK-NO CAS | Self-diagnosis of the mechanism when the set is loaded with no cassette tape. | Automatic finish | Refer to 1.10.9. | |
| 13 : MECHACHECK-IN CAS | Self-diagnosis of the mechanism when the set is loaded with a cassette tape. | Automatic finish | Refer to 1.10.9. | |
| 14 : M/S EEPROM CHECK | Self-diagnosis of reading/writing of the MECHA/SERVO EEPROM. | Automatic finish | Refer to Warning code No. 8202. | |
| 15 : M/S SW POINT CHECK | Display of measurement data on switching point with playback of MSHV-1. | Automatic finish | Refer to 1.10.10. | |
| 19 : AUDIO AD-DA CHECK | Self-diagnosis of the AUDIO circuit (AD-DA). (Refer to 1.10.6.) | Automatic finish | Refer to 1.10.6. | D80/D85 |
| 1A : AU AD-PV-DA CHECK | Self-diagnosis of the AUDIO circuit (AD-PV-DA). (Refer to 1.10.6.) | Automatic finish | Refer to 1.10.6. | D80/D85 |
| 1B : AU AES/EBU CHECK | Self-diagnosis of the DIGITAL AUDIO INPUT/OUTPUT circuit. (Refer to 1.10.6.) | Automatic finish | Refer to 1.10.6. | D80/D85 |
| 22 : PV DCI RETURN | Self-diagnosis of the PV PROCESS circuit. (Refer to 1.10.5.) | Automatic finish | Refer to 1.10.5. | D80/D85 |
| 34: OP LED CHECK | Self-diagnosis of LED and switch of OPERATION board<br>Each time the COUNTER RESET button is pressed, LED of the counter display goes on or goes out.<br>When any of operation buttons are pressed, the buttons light. | Press SELECT button. | Refer to 1.10.3. | |
| 35 : OP VR/DIAL CHECK | Self-diagnosis of VRs (DA1, DA2, TRACKING), SEARCH dial and AUDIO METER LED of the OPERATION board | Press SELECT button. | Refer to 1.10.4. | |
| 36 : OP EEPROM CHECK | Self-diagnosis of reading/writing of the OPERATION EEPROM | Automatic finish | Refer to Warning code No. 8203. | |
| 3C : LTC LOOP CHECK | Self-diagnosis of LTC circuit | Automatic finish | Refer to 1.10.7. | D80/D85 |
| 3D : VITC LOOP CHECK | Self-diagnosis of VITC circuit | Automatic finish | Refer to 1.10.8. | D80/D85 |
| 45 : SYS EEPROM CHECK | Self-diagnosis of reading/writing of the SYSCON EEPROM | Automatic finish | Refer to Warning code No. 8201. | |
| 46 : JVC BUS CHECK | Error indication only | Automatic finish | Refer to 1.10.9. | |
| 4C : RF RCAL/FCAL CH1-H | Display of adjustment data on RF REC current & Freq. response of precading CH1 head | Automatic finish | It must be displayed only data of in-specification, since data of out of specification will not be stored to the memory. | D80/D85 |
| 4D : RF RCAL/FCAL CH1-L | Display of adjustment data on RF REC current & Freq. response of following CH1 head | Automatic finish | | D80/D85 |
| 4E : RF RCAL/FCAL CH2-H | Display of adjustment data on RF REC current & Freq. response of precading CH2 head | Automatic finish | | D80/D85 |
| 4F : RF RCAL/FCAL CH2-L | Display of adjustment data on RF REC current & Freq. response of precading CH2 head | Automatic finish | | D80/D86 |

### 1.10.3 OPERATION LED CHECK mode

When there is a failure in a switch on the front panel or in the LED display, access the OPERATION LED CHECK mode to examine the trouble. The following explains the display in detail when the 34: OPERATION LED CHECK mode is activated.

1. Access the SELF-DIAGNOSIS mode and press the COUNTER RESET button.
2. Numbers that show setting positions of switches are shown on the counter display. Setting position of each switch is expressed by "0", "1" and "2" (setting position of 2-position switch is expressed by "0" or "1") in order from the upper position to the lower position.

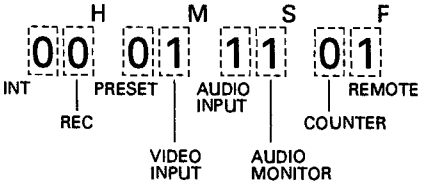


**Fig. 1-10-3 Self-diagnosis display for switch settings (initial settings on shipment)**

3. Press the COUNTER RESET button, and all LED indicators are turned on.
4. Press the SELECT button to quit the OPERATION LED CHECK mode.

### 1.10.4 OPERATION VR/DIAL CHECK mode

When there is a failure in a control (VR) on the front panel or in the SEARCH dial, access the OPERATION VR/DIAL CHECK mode to examine the trouble. The following explains the display in detail when the 35: OPERATION VR/DIAL CHECK mode is activated.

1. Access the SELF-DIAGNOSIS mode and press the COUNTER RESET button.
2. Data (HEX indication) on current setting positions of the SEARCH dial, TRACKING VR, DA1 VR, DA2 VR are shown on the counter display. As the TRACKING VR is turned in this mode, the level meter changes.

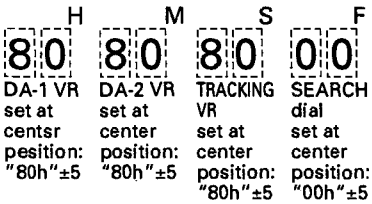


**Fig. 1-10-4 Self-diagnosis display for SEARCH dial, VRs (setting at center position)**

3. Press the SELECT button to quit the OPERATION VR/DIAL CHECK mode.

### 1.10.5 Self-diagnesis of PV PROCESS circuit

When there is something abnormal in playback picture, examine the PV PROCESS circuit by utilizing this self-diagnosis function. As "22: PV DCI RETURN" mode is activated, DCI R and DCI P are short-circuited as shown in Fig. 1-10-5 and self-diagnosis of the PV PROCESS circuit is executed. Explaining in detail, test data (internal color-bar signal) prepared by the SHUFF REC circuit is input to the PB PV PROCESS circuit through the REC PV PROCESS circuit. If there is a failure in the PV PROCESS circuit, error message "ER" appears on the display. Therefore, it is cleared that the abnormal picture results from a failure in the PV PROCESS board or from other reason.

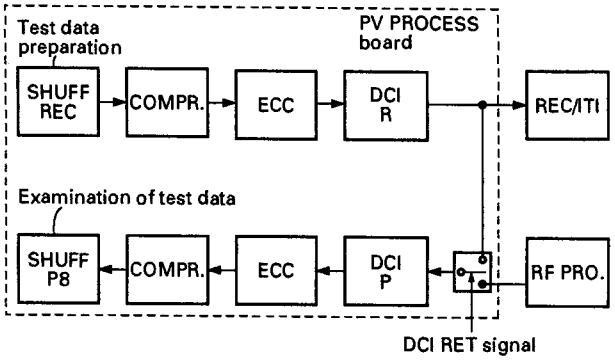


**Fig. 1-10-5 Self-diagnosis of PV PROCESS circuit**

### 1.10.6 Self-diagnosis of AUDIO circuit

When there is something abnormal in playback audio, examine the AUDIO circuit by utilizing this self-diagnosis function.

#### (1.) AUDIO AD-DA CHECK mode

As "19: AUDIO AD-DA CHECK" mode is activated, A/D and D/A are short-circuited as shown in Fig. 1-10-6 and self-diagnosis of the DIG AUDIO board is executed. Explaining in detail, test data (sine-wave signal) generated by the AUDIO-CPU is input to the D/A circuit through the A/D circuit. If there is a failure in the DIG AUDIO board, error message "ER" appears on the display. Therefore, it is cleared that the abnormal audio results from a failure in the DIG AUDIO board or from other reason.

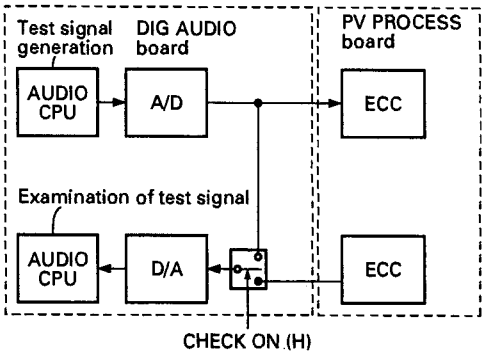


**Fig. 1-10-6 Self-diagnosis of DIG AUDIO circuit**

#### (2.) AUDIO AD-PV-DA CHECK mode

When "1A: AUDIO AD-PV-DA CHECK" mode is activated in the same manner as the AUDIO AD-DA CHECK mode, self-diagnosis of the AUDIO system of PV PROCESS circuit is executed.

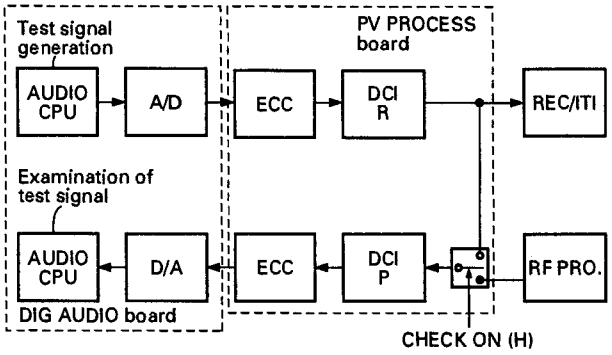


**Fig. 1-10-7 Self-diagnosis of AUDIO PV PROCESS circuit**

**(3.) AU AES/ESU CHECK mode (D85E, D80E+SA-D80U)**

When "1B: AU AES/EBU CHECK" mode is activated in the same manner as the above, self-diagnosis of the AUDIO system of DIG I/O circuit is to be executed. Differently from the preceding check modes, this mode needs to make a shortcircuit between the digital audio input and output terminals with a shorting wire. As a result of shortcircuit between the DIG AUD OUT and DIG AUD IN terminals, test signal (sine-wave signal) generated by the AUDIO CPU is input to the D/A circuit through the A/D circuit, DIG AUD OUT and DIG AUD IN terminals. If there is a failure in the AUDIO system of DIG I/O circuit, error message "ER" appears on the display. Therefore, it is cleared that the abnormal audio results from a failure in the AUDIO system of DIG I/O circuit or from other reason.

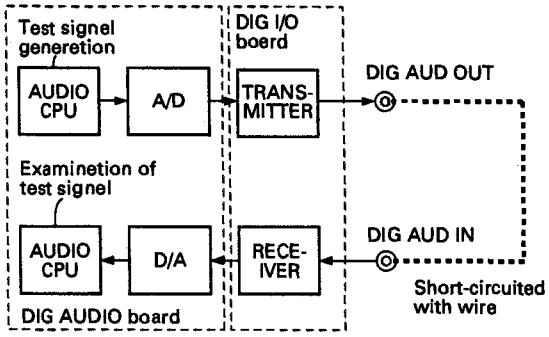


**Fig. 1-10-8 Self-diagnosis of AUDIO DIG I/G circuit**

### 1.10.7 LTC LOOP CHECK mode

When "3C: LTC LOOP CHECK" mode is activated with shortcircuit between the LTC IN and OUT terminals, self-diagnosis of the LTC circuit is to be executed as shown in Fig. 1-10-9. Test signal generated by the LTC GEN circuit is input to the LTC READER circuit through the short-circuited LTC OUT and IN terminals. When error message "ER" appears on the display in this check mode, it is thinkable that there is a failure in the LTC GEN, LTC READER or LTC circuit.

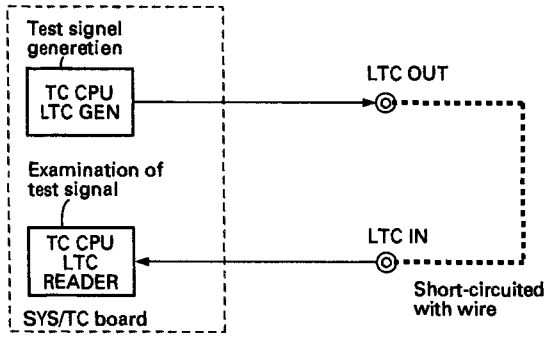


**Fig. 1-10-9 Self-diagnosis of LTC circuit**

### 1.10.8 VITC LOOP CHECK mode

When "3D: VITC LOOP CHECK" mode is activated with shortcircuit between the VIDEO LINE IN and OUT terminals, self-diagnosis of the VITC circuit is to be executed as shown in Fig. 1-10-10. Short-circuiting between the VIDEO LINE IN and OUT terminals makes loop test of the VITC circuit possible.

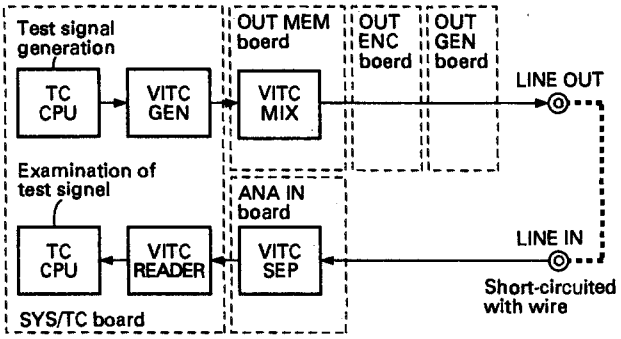


**Fig. 1-10-10 Self-diagnosis of VITC circuit**

### 1.10.0 Error sub-code indications

When an error is detected as a result of the following self-diagnoses, detail of the error is indicated by an error sub-code of HEX (hexadecimal) number.

**(1.) 12: MECHACHECK - NO CAS**

Detail of error is expressed by 2-bytes sub-code. Namely, error sub-code is converted into binary number, and the bit equivalent to "1" expresses the error in detail.

Example: Error sub-code is "21 00".
Error sub-code 1 ... "21"
Error sub-code 2 ... "00"

If error sub-code is converted into binary number according to the table below, bit 7 is equivalent to bit 0 in binary number.
Error sub-code 1 ... "0010 0001"
Error sub-code 2 ... "0000 0000"

According to the following table, the above data express that there are "disconnection of leader tape detecting LED" and "failure in drum motor".

| Hexadecimal number | 0 | 1 | 2 | 3 | 4 | 5 | 6 | 7 |
|---|---|---|---|---|---|---|---|---|
| Binary number | 0000 | 0001 | 0010 | 0011 | 0100 | 0101 | 0110 | 0111 |
| Hexadecimal number | 8 | 9 | A | B | C | D | E | F |
| Binary number | 1000 | 1001 | 1010 | 1011 | 1100 | 1101 | 1110 | 1111 |

| | | bit | Dotail of orror | Coping with error |
|---|---|---|---|---|
| Sub-code 1 | Lower 4bits | 0 | Disconnection of leader tape detecting LED | Refer to "Warning: 0101". |
| | | 1 | Drum is dewed. | Refer to "Warning: 0201". |
| | | 2 | Supply reel motor is faulty. | Refer to "Warning: 72". |
| | | 3 | Take-up reel motor is faulty. | Refer to "Warning: 73". |
| | Upper 4bits | 4 | Reol brake solenoid is faulty. | Defect of reel solenoid |
| | | 5 | Drum motor is faulty. | Refer to "Warning: 7001". |
| | | 6 | Capstan motor is faulty. | Refer to "Warning: 7101". |
| | | 7 | Low supply tension | Refer to "Warning: 0801". |
| Sub-code 2 | Lower bits | 0 | Failuro in loading | Refer to "Warning: 32". |
| | | 1 | Failure in unlcading | Refer to "Warning: 33". |
| | | 2 | Always 0 | — |
| | | 3 | Always 0 | — |
| | Upper 4 bits | 4 \| 7 | Alweys 0 | — |

**(2.) 13: MECHACHECK - IN CAS**

Detail of error is expressed by 2-bytes sub-code in this check mode. For detail of sub-code, refer to the above item 1, "12: MECHACHECK - NO CAS".

| | | bit | Detail of error | Coping with error |
|---|---|---|---|---|
| Sub-code 1 | Lower 4bits | 0 | Failure in intake | Refer to "Warning: 40". |
| | | 1 | Detection of tape begin | Refer to "Warning: 58". |
| | | 2 | Detection of tape end | Refer to "Warning: 57". |
| | | 3 | Supply reel motor is faulty. | Refer to "Warning: 72". |
| | Upper 4bits | 4 | Take-up reel motor is faulty. | Refer to "Warning: 73". |
| | | 5 | Failure in loading | Refer to "Warning: 32". |
| | | 6 | Abnormal pinch roller pressure | Defect of pinch solenoid |
| | | 7 | Failure in unloading | Refer to "Warning: 33". |
| Sub-code 2 | Lower bits | 0 | Failure in ejection | Refer to "Warning: 4101". |
| | | 1 \| 3 | Always 0 | — |
| | Upper 4 bits | 4 \| 7 | Always 0 | — |

**(3.) 27: DIG I/O CHECK**

Detail of error is expressed by 1-byte sub-code in this check mode. For detail of sub-code, refer to the preceding item 1, "12: MECHACHECK - NO CAS".

| | | bit | Detail of error | Coping with error |
|---|---|---|---|---|
| Sub-code 1 | Lower 4bits | 0 | Abnormal H period of output data | Refer to "Warning: 91xx". |
| | | 1 | Absence of output data | Refer to "Warning: 91xx". |
| | | 2 | Abnormal data output | Refer to "Warning: 91xx". |
| | | 3 | Different SDI input signal format | Refer to "Warning: 91xx". |
| | Upper 4bits | 4 | Absence of SDI input signal | Refer to "Warning: 91xx". |
| | | 5 | Abnormal SDI input signal | Refer to "Warning: 91xx". |
| | | 6 | Abnormal H period of SDI input signal | Refer to "Warning: 91xx". |
| | | 7 | Abnormal input of SDI signal | Refer to "Warning: 91xx". |

**APPENDIX: Notation of Roman alphabot on oountor display**

On the counter display, each letter of Roman alphabet is transcribed as shown in the following table.

| Roman lottor | Shown aa | Roman lattor | Shown as | Roman lottor | Shown as | Roman lottor | Shown as | Roman lattar | Shown as |
|---|---|---|---|---|---|---|---|---|---|
| A | | E | | I | | n | | S | |
| b |  | F |  | J |  | O |  | T |  |
| c |  | g |  | L |  | P |  | U |  |
| d |  | H | | M | | r | | Y | |

**(4.) 46: JVC BUS CHECK**

Faulty CPU is indicated by 2-bytes sub-code in this check mode.

| Sub-code | Detail of error | Coping with error |
|---|---|---|
| 1100 | 9-PIN CPU is faulty. | Refer to "Warning: 8001". |
| 1200 | MCTL/SV CPU is faulty. | Refer to "Warning: 8002". |
| 1300 | PV CPU is faulty. | Refer to "Warning: 8003". |
| 1400 | OPERATION CPU is faulty. | Refer to "Warning: 8004". |
| 1500 | TIME CODE CPU is faulty. | Refer to "Warning: 8005". |
| 1600 | AUDIO CPU is faulty. | Refer to "Warning: 8006". |
| 1700 | RF CPU is faulty. | Refer to "Warning: 8007". |

### 1.10.10 16 : M/S SW POINT CHECK

- In-specification :
  Displayed from 0Ch to F4h. (0Ch is center)
- Out of specification :
  Check the tape if it is wrinking or damaging.
  Check the level and timing at TP14 (SPAP signal) of MCTL/SV board.

### 1.10.11 11 : M/S TR DATA

Display the current tracking data as shown below.

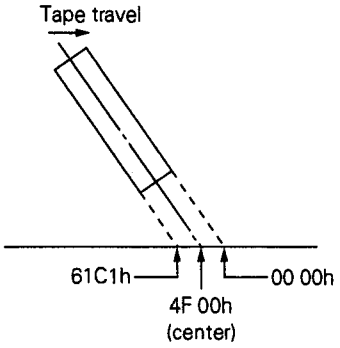


**Fig. 1-10-11**

**MEMO**

**MEMO**

# SECTION 2

# MECHANISM ADJUSTMENT

# CONTENTS


2.1 GENERAL DESCRIPTION ..... 2-1
2.1.1 Precautions ..... 2-1
2.1.3 Special tools for mechanism adjustment ..... 2-1
2.1.2 General tools necessary for mechanism adjustment ..... 2-1
2.1.4 Test instrument necessary for mechanism adjustment ..... 2-2
2.1.5 Specifications of alignment tape ..... 2-2
2.2 STANDARD OF MAIN PARTS REPLACEMENT ..... 2-2
2.2.1 Location of main parts ..... 2-3
Check and adjustment flowchart for standard service period of H, A and C ..... 2-4
Check and adjust flowchart for standard service period of B and D ..... 2-5
2.2.2 Check and maintenance table ..... 2-3
2.2.3 Cleaning ..... 2-6
2.2.4 Oiling and greasing ..... 2-6
2.3 REPLACEMENT OF MAIN PARTS ..... 2-7
2.3.1 Replacement of cassette housing assembly ..... 2-7
2.3.2 Replacement of drum assembly ..... 2-8
Check and adjustment flowchart after drum replacement ..... 2-10
2.3.3 Replacement of AC head ..... 2-11
Check and adjustment flowchart after A/C head replacement ..... 2-12
2.3.4 Replacement of tension arm assembly ..... 2-14
2.3.5 Replacement of pinch roller arm assembly ..... 2-16
2.3.6 Replacement of capstan motor ..... 2-17
2.3.7 Replacement of reel motor assembly ..... 2-18
2.3.8 Replacement of mode motor ..... 2-19
2.3.9 Replacement of reel brake assembly ..... 2-20
2.3.10 Replacement of take-up pole base assembly and take-up loading gear ..... 2-21
2.3.11 Replacement of supply pole base assembly and supply loading gear ..... 2-25
2.3.12 Replacement of take-up roller and take-up tape scraper ..... 2-29
2.4 MECHANISM ASSEMBLING POSITION ..... 2-30
2.4.1 Assembling position ..... 2-30
2.4.2 Adjustment of pinch roller solenoid position ..... 2-33
2.4.3 Adjustment of tension sensor position ..... 2-34
2.5 PRESET OF TRACKING VR ..... 2-35
2.6 AUTOMATIC ADJUSTMENT OF FG DUTY OF CAPSTAN AND REEL MOTORS AND CAPSTAN STOP SERVO 2-35
2.7 ADJUSTMENT OF REEL SERVO CIRCUIT ..... 2-36
2.7.1 Adjustment of tension sensor ..... 2-36
2.7.2 Adjustment of torque ..... 2-37
2.8 ADJUSTMENT OF A/C HEAD ..... 2-40
2.8.1 Coarse adjustment ..... 2-40
2.8.2 Adjustment of X-value ..... 2-42
2.8.3 Adjustment of azimuth ..... 2-43
2.9 ADJUSTMENT OF TAPE TRANSPORT SYSTEM ..... 2-46
2.9.1 Check of tape transport system ..... 2-46
2.9.2 Adjustment of tape travel in search mode (with tape end) ..... 2-47
2.9.3 Adjustment of tape travel in search mode (with tape beginning) ..... 2-50
2.9.4 Adjustment of take-up roller ..... 2-52
2.10 ADJUSTMENT OF INTERCHANGEABILITY ..... 2-53

# SECTION 2
# MECHANISM ADJUSTMENT

## 2.1 GENERAL DESCRIPTIGN

### 2.1.1 Praeautions

1. When using a soldering iron, make sure to disconnect the power cord of the set from the mains outlet beforehand.
2. When disconnecting a connector from the other, don't pull the connector cable but do it by the connector body without fail.
3. Don't disturb any adjustment part or adjusting VR with a trouble of unknown origin.
4. Don't insert a cassette tape into the set as it is abnormally placed such as laid on its side or top, otherwise the cassette housing may be damaged by insertion of cassette.
5. Through the mechanism adjustment, leave the set as its top cover and side covers are removed.
6. **Whon raplacing rollars, maka sura to do it ona aftar anothar and to chock tha tapa transport systam avary timo a rollor ie raplacad.**

### 2.1.2 Gonoral tools necessary for mechanism adjustmant

- Nut wrench (5.5 mm)
- Taper nut driver (PUJ50637)
- Clearance gauge (0.1 mm)(PRD40300)
- Hex wrenches (0.9 mm, 1.27 mm, 2 mm)
- Phillips (+) screwdrivers (4 mm, 2.6 mm, 2 mm)
- Flat (-) screwdrivers
- Small screwdrivers
- Torque driver
- VHS Tape
- DIGITAL S Tape

### 2.1.3 Special tools for mochanism adjustmant

| Alignment tape<br>MHPE, MBAE-3, MSHP, MSHP-X | Cassette torque meter<br>PUJ42881, PUJ42881B (containing VHS tapo) | Parallel check plate | Height gauge<br>PGJ04032 |
|---|---|---|---|
| 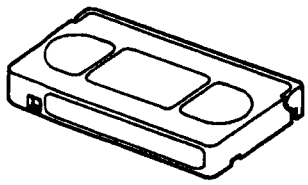 | 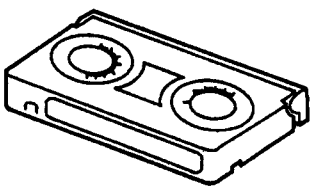 | PGJ04035 (0.05mm)<br>PUJ50204 (0.1mm)<br>PGJ04039 (0.15mm)<br> 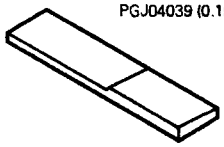 <br>(Use the flat part only.) | 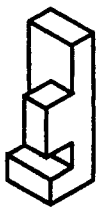 |
| Line head wrench<br>PGJ04033-2 | Hexdriver<br>PGJ04034 (2mm) | Take-up tape scraper fitting tool<br>KL40109 | A/C head inclination adjusting tool<br>PGJ40767-2 |
| (See Note.)<br> 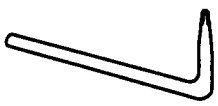 | 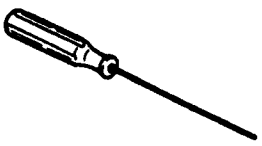 | 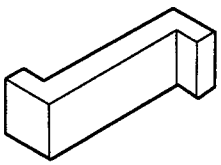 | 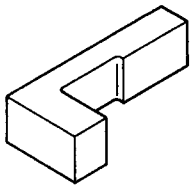 |

**Noto**: Prepare two line head wrenches and bend one of them inwards at an angle of 15° approximately.

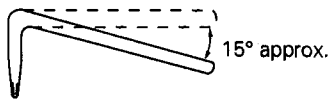

### 2.1.4 Test instrument necessary for mechanism adjustment

| Measuring instruments | Requirement | Measuring instrument | Requirement |
|---|---|---|---|
| Oscilloscope | Capable of measuring 100 MHz and higher frequency band, moreover, it is exactly calibrated. | Audio Tester | It is exactry calibrated. |

### 2.1.5 Specificetions of alignment tape

**· MHPE**

| Video signal | Audio signal | Application | Remark |
|---|---|---|---|
| VHS (SP mode) Stairstep | 6kHz | For adjustment of A/C head azimuth. | Stairstep segment of MH2 tape is substitutable. |

**· MBAE-3**

| Video signal | Audio signal | Application | Remark |
|---|---|---|---|
| – | 1kHz (Guard band recording) | For adjustment of A/C head height. | Tape that MHAE-3 is changed just in the name. |

**· MSHP**

| Video signal | Audio signal | Time | Application |
|---|---|---|---|
| Sine wave | – | 50 min | For adjustment of interchangeability (linearity) |

**· MSHP-X**

| Video signal | Audio signal | Time | Application |
|---|---|---|---|
| – | – | 50 min | For adjustment of x-value and tracking preset |

## 2.2 STANDARD OF MAIN PARTS REPLACEMENT

Periodical inspection and maintenance are the prerequisite for ensuring the original performance and reliability of the set. Table 2-2-1 (check and maintenance table for major parts) is compiled as a standard of main parts replacement on the assumption that the set is used in ordinary conditions. Therefore, replacing periods indicated in the table greatly differ depending on actual use and environmental conditions. Moreover, if the set undergoes inspection and maintenance irregularly or is left without inspection and maintenance, it not only shortens the replacement period considerably but also affects other parts and the whole function.

Rubber parts require careful attention because they are apt to deform or deteriorate if the set is hardly used or left in bad environment.

The life time of the drum depends on use and environmental conditions.

### 2.2.1 Location of main parts

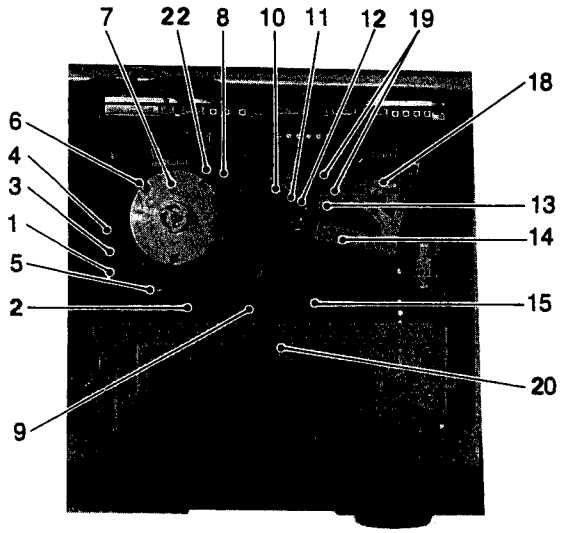


Fig. 2-2-1 Uppor sido of deck section

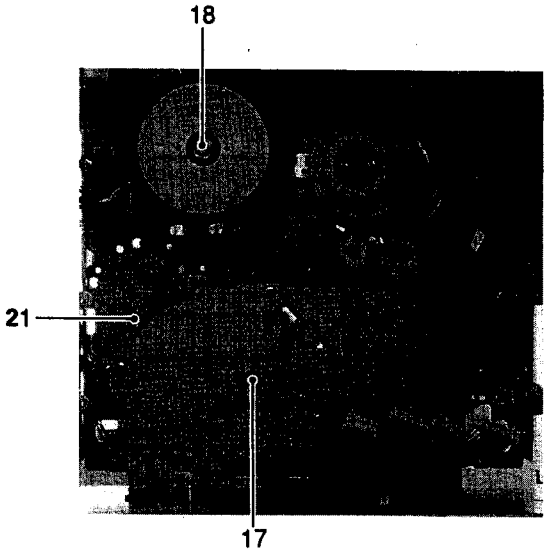


Fig. 2-2-2 Back side of dock soction

### 2.2.2 Check and maintenance tablo

**Tablo 2-2-1** Check and maintenance table for major parts ★: Cleaning ○: Replacing if required Cleaning if it is not replaced ●: Replacing

| Classification | No. | Part Name | Reference section of this manual | Standard service period* | | | | | Symbol No. of part and page which it appears in | Remark |
|---|---|---|---|---|---|---|---|---|---|---|
| | | | | H | A | B | C | D | | |
| Tape transport system | 1 | Supply roller 1 | 2.9.2 | ○ | ● | | | | No. 20, p. 5-11 | |
| | 2 | Tension arm assembly | 2.3.4 | ★ | ○ | ● | | | No. 26, p. 5-11 | |
| | 3 | Supply roller 2 | 2.9.2 | ○ | ● | | | | No. 21, p. 5-11 | |
| | 4 | Full erase head assembly | — | ★ | ○ | ● | | | No. 22, p. 5-11 | Including supply tape scraper |
| | 5 | Supply pole base assembly | 2.3.11 | ○ | ● | | | | No. 4, p. 5-11 | |
| | 5 | Supply impedance roller | — | | | | | | — | Included in Drum assembly |
| | 7 | Drum assembly | 2.3.2 | ● | | | | | No. 17, p. 5-5 | |
| | 8 | Take-up impedance roller | — | | | | | | — | Included in Drum assembly |
| | 9 | Take-up pole base assembly | 2.3.10 | ○ | ● | | | | No. 7B, p. 5-11 | |
| | 10 | A/C head | 2.3.3 | ★ | ○ | ● | | | No. 8, p. 5-11 | Exclueded in A/C HEAD board |
| | 11 | Take-up tape scraper | 2.3.12 | ★ | | | | | No. 13, p. 5-11 | |
| | 12 | Take-up roller | 2.3.12 | ○ | ● | | | | No. 12, p. 5-11 | |
| | 13 | Capstan shaft | — | ★ | | | | | — | |
| | 14 | Pinch roller arm assembly | 2.3.5 | ○ | ● | | | | No. 53, p. 5-12 | Perform subsection "2.4.2" |
| | 15 | Take-up guide arm roller assembly | 2.9.2 | | | | | | No. 25, p. 5-11 | |
| Drive system | 16 | Capstan motor | 2.3.6 | ★ | | ● | | | No. 1, p. 5-13 | Perform subsection "2.4.2" |
| | 17 | Reel motor | 2.3.7 | | | | | | No. 2, p. 5-13 | |
| | 18 | Mode motor | 2.3.8 | | | | | ● | No. 44, p. 5-11 | |
| | 19 | Loading belts | — | ★ | ● | | | | No. 41, p. 5-11<br>No. 51, p. 5-12 | Motor side<br>Worm gear side |
| | 20 | Cassette housing | 2.3.1 | | ● | | | | M 8 , p. 5-15 | |
| | 21 | Reel brake | 2.3.9 | | ● | | | | No. 10, p. 5-13 | |
| Others | 22 | Head cleaner | 2.3.2 | ● | | | | | No. 11, p. 5-5 | Excluded from drum assembly |
| | – | Swithing regulator assembly | 1.3.6 | | | ● | | | No. 8, p. 5-6 | |
| | – | Rotary encoder | 2.4.1 | | | | ● | | No. 59, p. 5-11 | |

*** For fixing an aim te service, follow the indicstien of tha DRUM HOUR METER appearing on ths MENU switch setting scresn in general.**
**H: every 750 hours, A: evsry 1500 hours, B: svery 3000 heurs, C: svsry 4500 hours, D: ovsry 6000 hours**

**Check and adjustment flewchart fer standard service peried ef H, A and C**

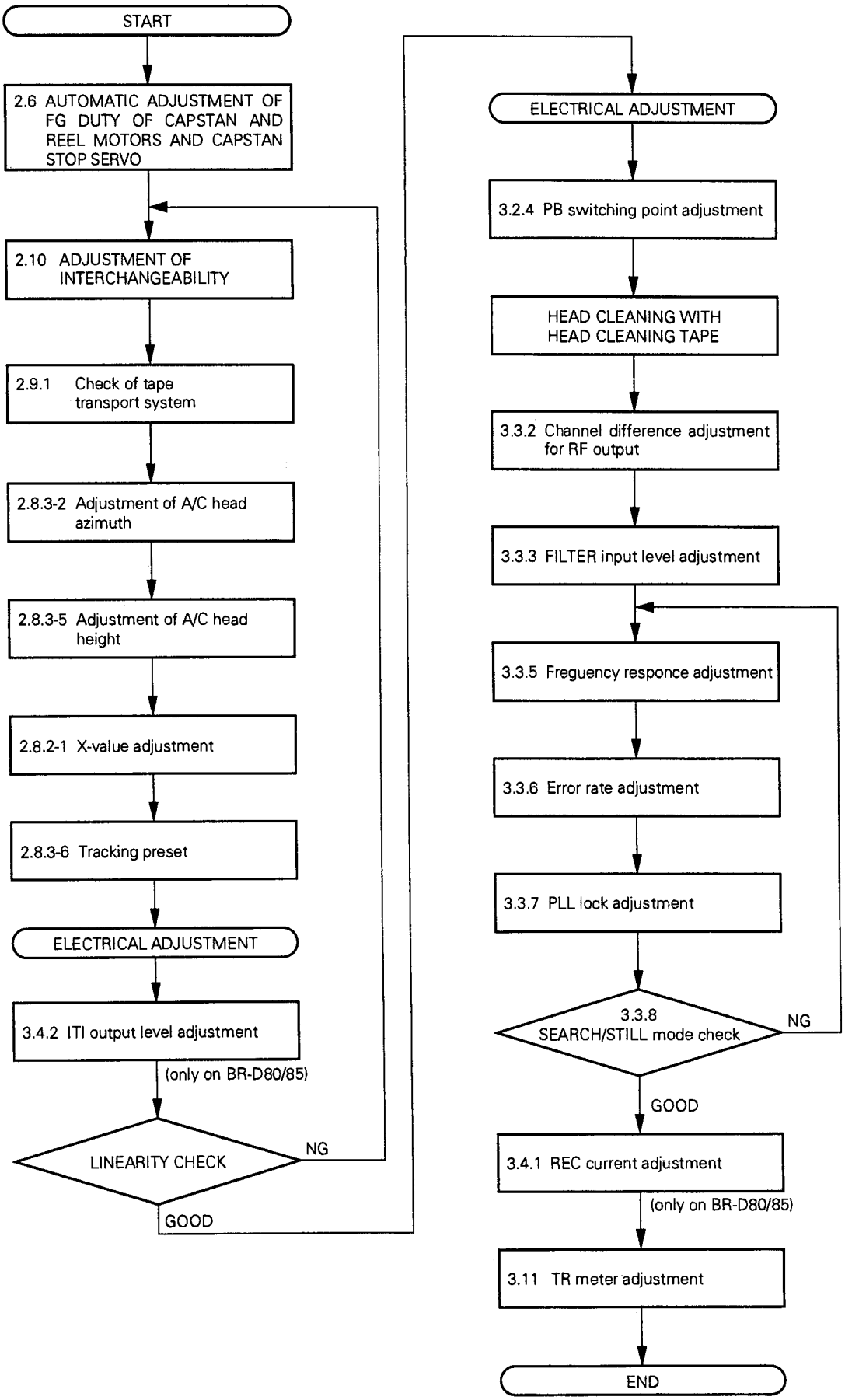

**Check end edjuetment flowchart for atandard aervice period of B and D**

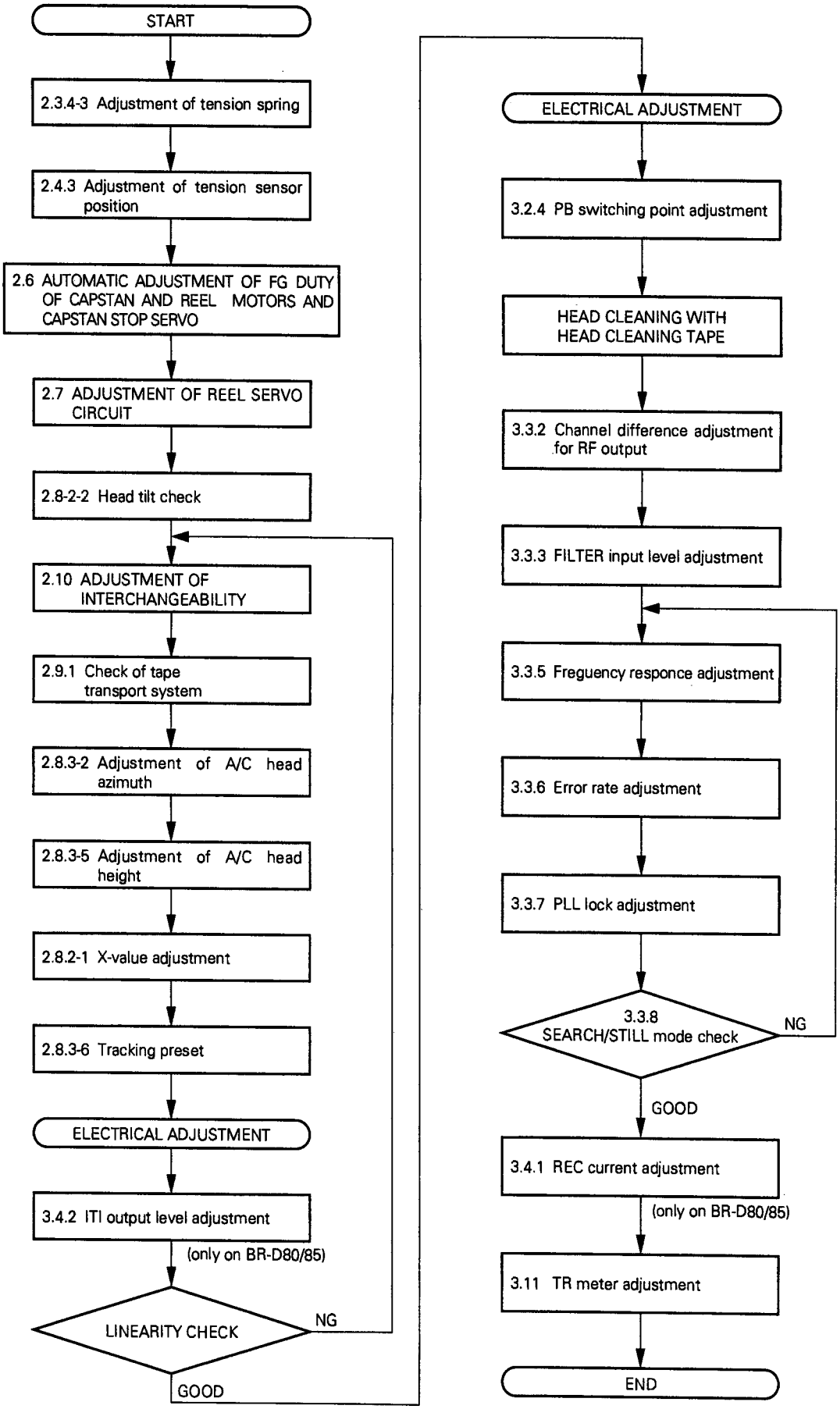

### 2.2.3 Cleening

It is desirable to carry out periodical cleaning of the tape transport system, however, it is almost impossible to do it during actual use of the set. Therefore, clean the tape transport system without fail whenever the set is brought in for service. For cleaning, use fine woven cotton cloth moistened with ethyl alcohol.

1. If the head is dirty or dusty, playback picture may consist of a great deal of minute square blocks because of malfunction of error correction, or the set fails in playing back picture for the worst.
   For cleaning the video head, turn the middle drum in the normal direction (the same as VHS model) while pressing quality paper lightly onto the surface of the middle drum.

**Note:**
**Since the video head is wesk against vertical force (applied in up-down direction), it may essiiy be damaged if cleaning paper is movad.**

2. Dirty and dusty tape guide not only increases dirt on the video head but also damages tape.
   If dust and foreign particles have collected on and around guide rollers, it may possibly cause abnormal roller rotation and may result in deterioration in picture quality as mentioned above.

### 2.2.4 Oiling end greesing

If oil or grease looks worn or deteriorated, wipe it off and then apply new oil or grease to the specified place.

1. Table 2-2-2 shows oil and grease used in this set.

**Teble 2-2-2 Oil end grease used in this set**

| Claasification | Nams | Part No. |
|---|---|---|
| Oil* | Cosmo Hydro HV56 | COSMO-HV56 |
| Grease | Moriton Grease (Black) | MOS2-C |
| | Fuloil G-31KAV (Light blue) | KANTO-G-31KAV |
| | Fuloil GB-TS-1 (Ocher) | KANTO-GB-TS-1 |

* General spindle oil (low viscosity) is substitutable.

2. Control cam needs greasing every 1500 hours of operation.
3. Other parts need greasing every 3000 hours of operation or at the time of replacement.
4. For parts that need oiling or greasing, refer to the exploded view of SECTION 5 EXPLODED VIEWS AND PARTS LIST.

| No. | Item | Referenoe pioture/drawing | Procedure |
|---|---|---|---|

## 2.3 REPLACEMENT OF MAIN PARTS

### 2.3.1 Replecement of cessette housing essembly

| | | | |
|---|---|---|---|
| 1 | Removing | 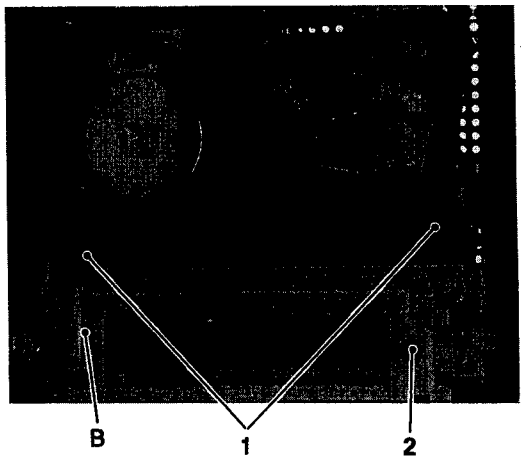 **Fig. 2-3-1 Removing cessette houeing essembly (A)**<br> 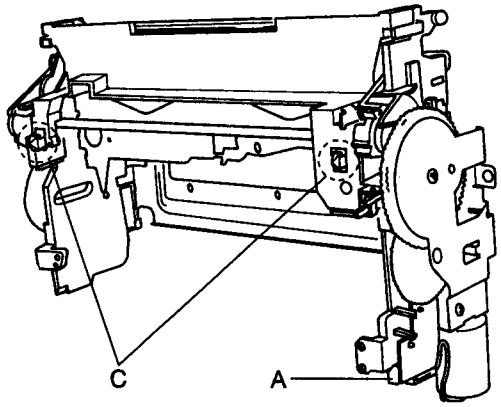 **Fig. 2-3-2 Removing cessette housing sssembly (B)** | 1) Remove the front panel assembly. (Refer to 1.1.3.)<br>2) Remove two screws 1 and one screw 2.<br>3) Press the cassette housing toward the drum to disengage it from the hook C. In this condition, raise the cassette housing up and disconnect the connector A of the HOUSING board. Then, remove the cassette housing B from the set. |
| 2 | Installing | | 4) When reassembling the cassette housing to the set, do it in the reverse order of removing with one exception. That is to say, connect the connector A prior to fitting the cassette housing. |

| No. | Item | Reference picture/drawing | Procedure |
|---|---|---|---|

### 2.3.2 Replacement of drum assembly

| | | | |
|---|---|---|---|
| 1 | Removing | 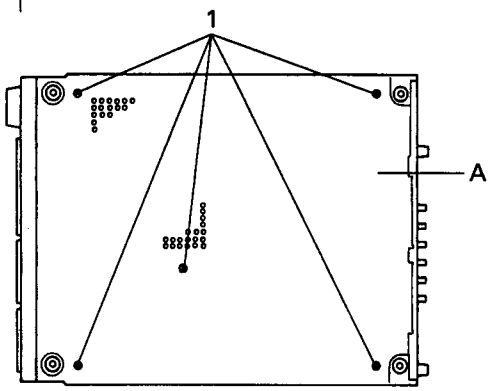 **Fig. 2-3-3** | 1) Remove five screws 1 first and then remove the bottom cover A. (Fig. 2-3-3) |
| | | 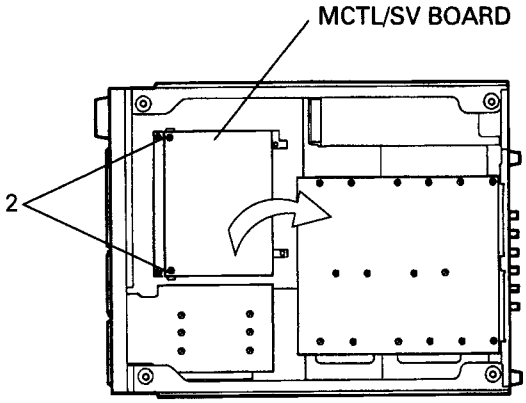 **Fig. 2-3-4** | 2) Remove two screws 2 and fold out the MCTL/SV board. (Fig. 2-3-4) |
| | | 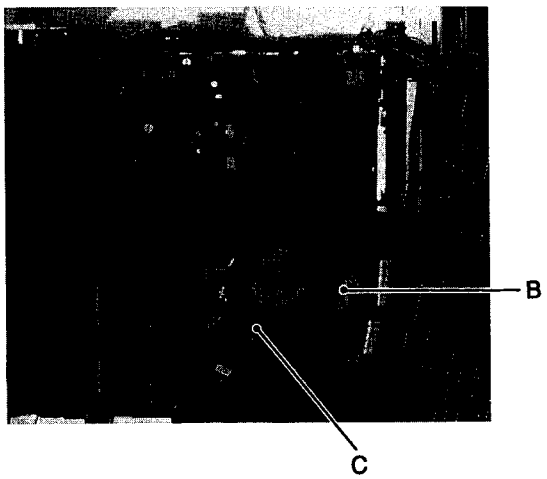 **Fig. 2-3-5** | 3) Disconnect connectors B and C from the drum assembly. (Fig. 2-3-5)<br>(BR-D50 does not hove connector C.) |

| No. | Item | Reference picture/drawing | Procedure |
|---|---|---|---|

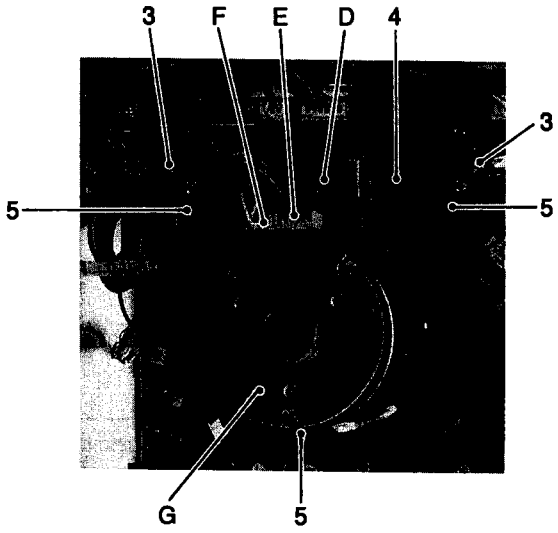


**Fig. 2-3-6**

4) Remove two screws 3 and remove the REC ITI board by lifting upward. (Fig. 2-3-6)
5) Remove one screw 4 and do the head cleaner assembly D. (Fig. 2-3-6)
6) Disconnect connectors E and F from the drum assembly. (Fig. 2-3-6)

**Note:**
**For disconnecting/connecting the connectors E and F, carefully do it not to apply any force to the drum.**

7) Remove three screws 5 and remove the drum assembly G. (Fig. 2-3-6)
8) For installing a new drum assembly to the set, perform reassembling parts in the reverse order of removing. At that time, tighten the screws 5 with a torque of 0.49 N/m (5 kgf/cm).
9) When the drum assembly is replaced, perform check and adjustment according to the following flowchart.

**Check and adjustment flewchart after drum replacement**

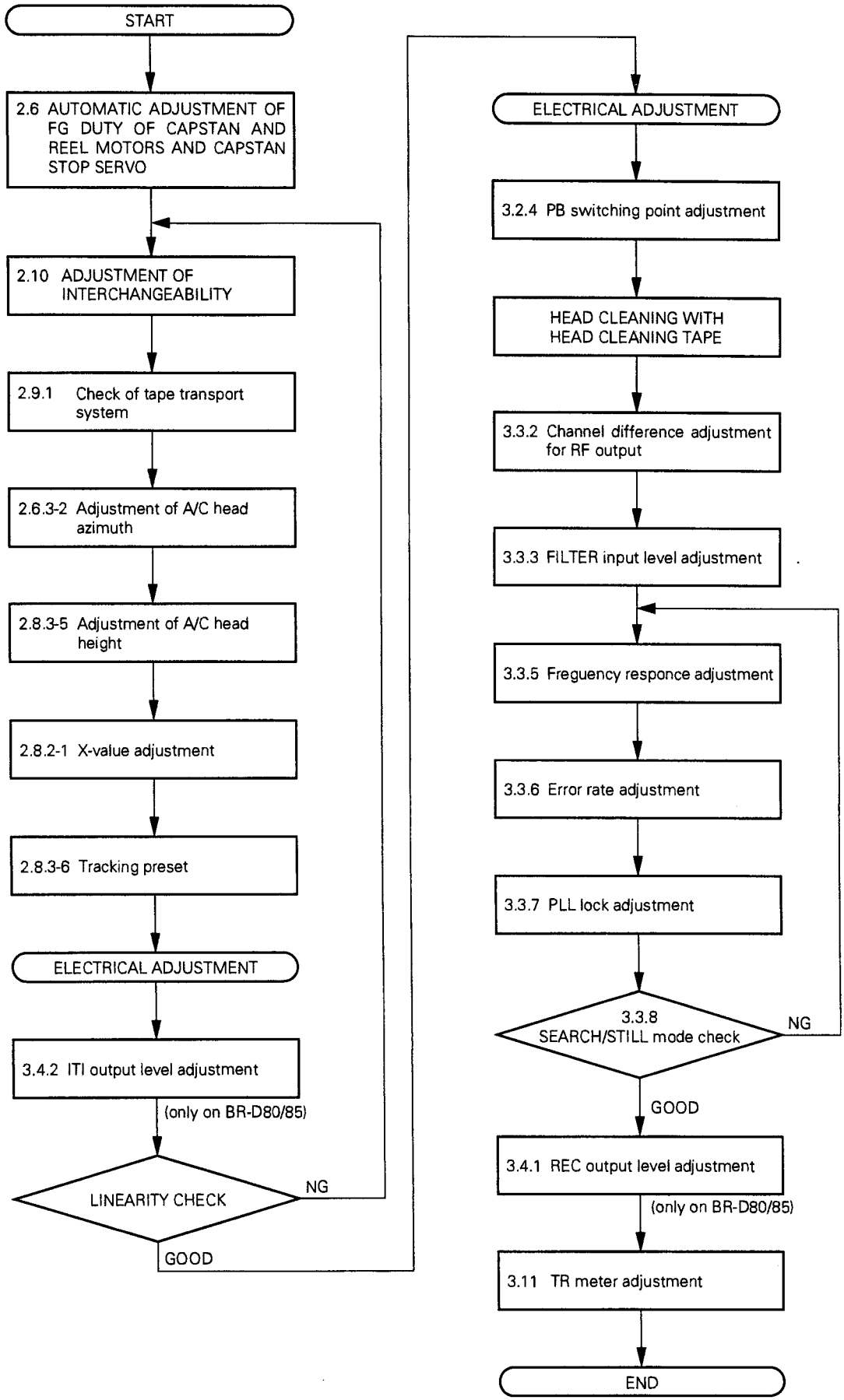

| No. | Item | Reference picture/drawing | Procedure |
|---|---|---|---|

### 2.3.3 Replacamant of AC haad

| | | | |
|---|---|---|---|
| 1 | Removing | 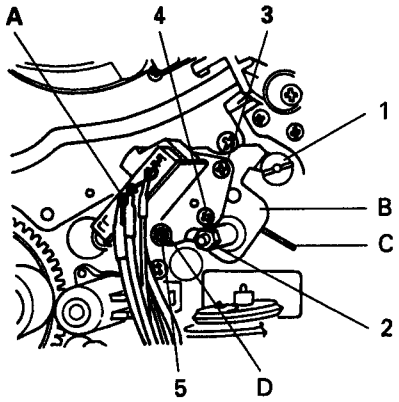 <br>**Fig. 2-3-7** | 1) Disconnect the connector A of the A/C HEAD board.<br>2) Remove a taper nut 1.<br>3) Remove e nut 2.<br>4) Remove the A/C head together with the head base with careful attention to the spring under the head base B.<br>5) After remove the screws 3, 4 and 5, remove the A/C head from the head base with careful attention to the spring D not to lose it.<br>6) Unsolder the A/C HEAD board and replace the A/C head. |
| 2 | Installing | 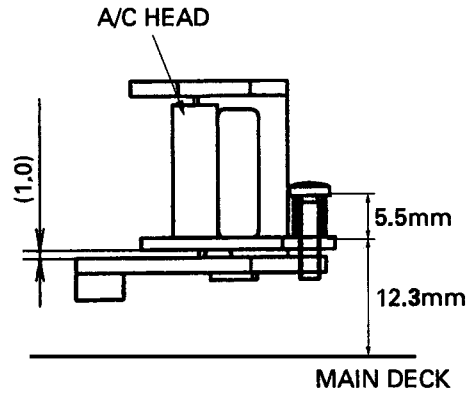 <br>**Fig. 2-3-3**<br> 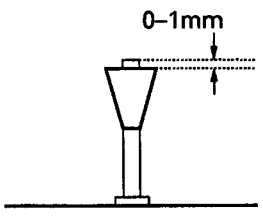 <br>**Fig. 2-3-9** | 1) When mounting a new A/C head on the head base, roughly adjust the height of screw 5 as indicated by Fig. 2-3-8. Moreover, set the A/C head in parallel with the head base by adjusting screws.<br>2) Reassemble the A/C head with the head base to the set in the reverse order of removing. At that time, adjust the clearance between the head base and the main deck with the nut 2 as specified by the Fig. 2-3-8.<br>3) Temporarily adjust the height of the taper nut 1 as shown by Fig. 2-3-9. |

| No. | Item | Reference picture/drawing | Procedure |
|---|---|---|---|
| 3 | Check and adjustment | | **Note:** **For tape travel check prior to adjustment, don't use an alignment tape but use a general recording tape because tha tape may be damaged before adjustmant.**<br>1) Adjust the A/C head (refer to 2.8).<br>2) Check the tape transport system (refer to 2.9), and adjust it if the occasion arises.<br>3) Check the X-value (refer to 2.8.2), and adjust it if the occasion arises.<br>4) Check the linearity (refer to 2.10.1), and adjust it if the occasion arises. |

**Check end adjustment flowchart efter A/C heed replecement**

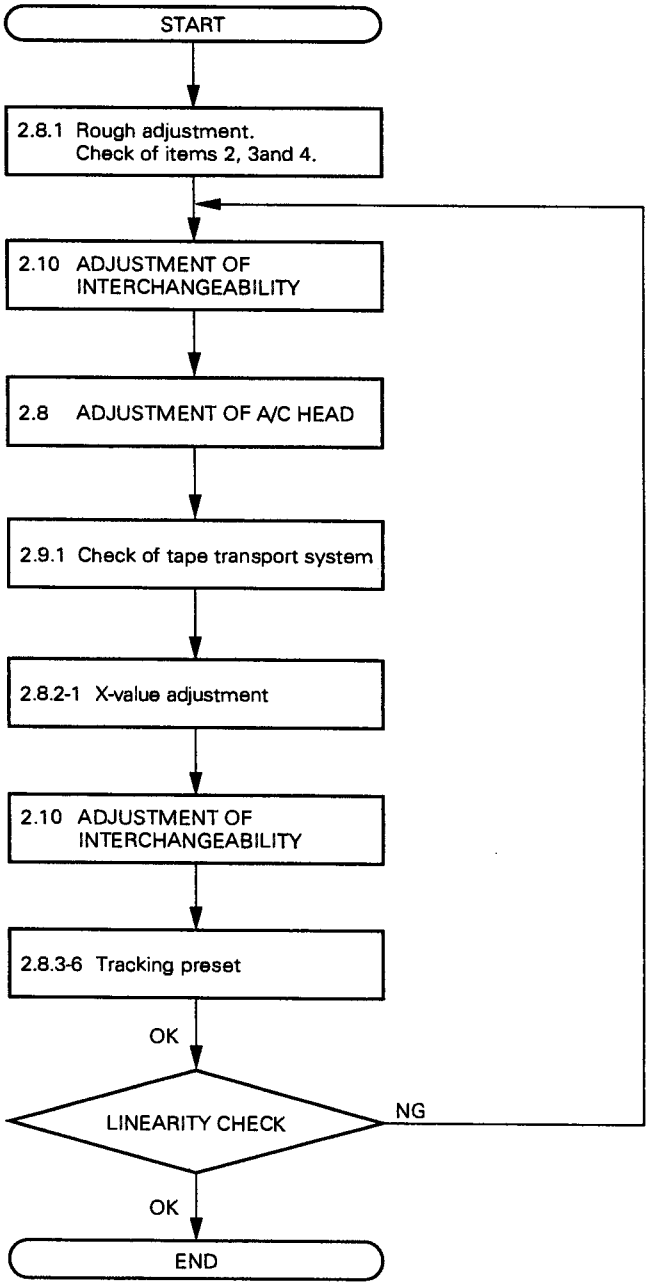

| No. | Item | Reference picture/drawing | Procedure |
|---|---|---|---|

### 2.3.4 Roplacamont of tonsion arm assombly

**Noto:** • Before replacing the tension arm assembly, make sure to check the set for "2.7 ADJUSTMENT OF REEL SERVO CIRCUIT" and to adjust anything abnormal, if it is.
• After replacement of the tension arm assembly, proceed to the following item "3. Adjustment of tension spring"mentioned on the next page without fail.

| | | | |
|---|---|---|---|
| 1 | Removing | **Fig. 2-3-10** | 1) Remove the cassette housing assembly. (Refer to 2.3.1.)<br>2) After removing five screws 5, remove the bottom cover A. (Refer to Fig. 2-3-3.)<br>3) Remove two screws 2 and fold out the MCTL-SV board. (Refer to Fig. 2-3-4.)<br>4) Remove the REEL MDA board.<br>5) Remove a slit washer B. (Refer to Fig. 2-3-10.) |
| | | 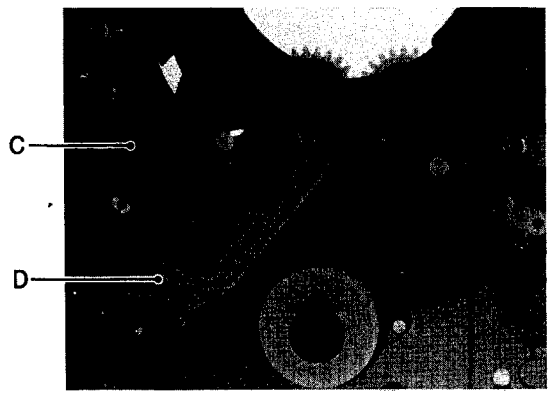 **Fig. 2-3-11** | 6) After removing a spring C that is engaged between the tension arm assembly and the spring adjust assembly, remove the tension arm assembly D while raising it up. (Refer to Fig. 2-3-11.) |
| 2 | Installing | | 1) Install a new tension arm assembly in the reverse order of removing.<br>**Note:**<br>**When installing a new tension arm assembly, make sure to replace the slit washer B with new one, too. See the symbol No. W1 on page 5-12.**<br>2) Adjust the reel servo circuit (refer to 2.7).<br>3) Adjust the tape transport system (refer to 2.9).<br>4) Proceed to the tension spring adjustment. (Refer to the following page.) |

| No. | Item | Measuring instruments & Input signals | Mode | Measuring point ( ◎ )<br>Adjustment parts ( ⓣ )<br>Adjustment level ( ☆ ) | Adjustment procedure |
|---|---|---|---|---|---|
| 3 | Adjustment of tension spring | Digital voltmeter | TEST mode<br>65 0000 | ◎Between<br>TP12 [MCTL/SV] and<br>TP13 [MCTL/SV]<br>☆1.85 ± 0.1 V | **This adjustment is normally not necessary unlass when tension arm is replaced, or when tha spring tension has been changed due te tha time elapsing.**<br>**When the tension arm or tension spring needs to be replace, make sure to check the set for "2.7 ADJUSTMENT OF REEL SERVO CIRCUIT" and to adjust anything abnormal befere replacement.**<br>**Note:**<br>**Use a soma signal recorded tape (DS-104) for this adjustment.**<br>1) Play back the tape.<br>2) Check to see if voltage at the measuring point (between TP12 and TP13 [GND]) meets the specification or not.<br>3) If it differs from the specified voltage, remove the tape from the set.<br>4) Loosen the screw 1.<br>5) When the voltage is higher than the standard, slightly slide the spring plate A toward the rear panel with a precision screwdriver or the like. Or, when it is lower, slightly slide the spring plate A toward the front panel. Make sure to tighten the screw 1 after this job.<br>6) Make sure to adjust the set for "2.7 ADJUSTMENT OF REEL SERVO CIRCUIT".<br>7) Play back the tape again to check the voltage.<br>8) If the voltage is still out of specification, repeat the above steps from 2) through 7) .<br>9) Check the "2.7 ADJUSTMENT OF REEL SERVO CIRCUIT"<br>10) If the adjustment levels are still out of specification, repeat the above steps from 2) through 8). |

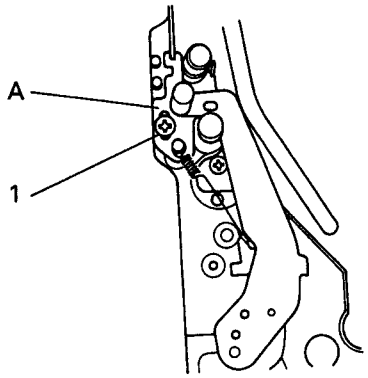


**Fig. 2-3-12**

| No. | Item | Reference picture/drawing | Procedure |
|---|---|---|---|

### 2.3.5 Replacement of pinch roller arm assembly

**Note:** For removing and installing pinch roller arm assembly, set the mechanism in the assembling position (refer to 2.4.1).

| | | | |
|---|---|---|---|
| 1 | Removing | 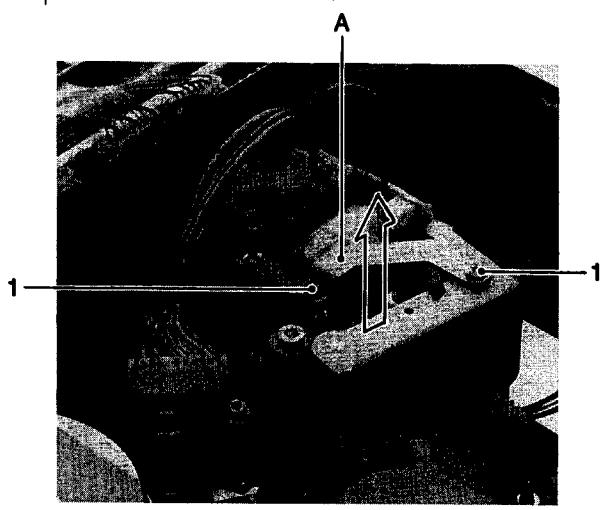 **Fig. 2-3-13** | 1) After removing two screws 1 and arm A, then remove the pinch roller arm assembly while raising it up. |
| 2 | Installing | 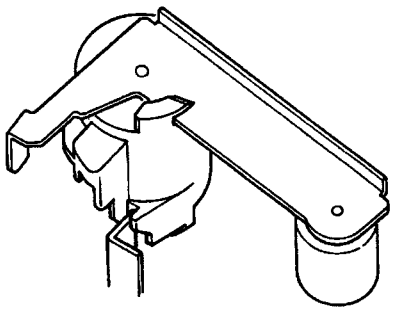 **Fig. 2-3-14** | 1) Install a new pinch roller arm assembly so that the notch of its cam is put on the rail of the solenoid bracket.<br>2) Perform "2.4.2 Adjustment of pinch roller solenoid position". |

| No. | Item | Reference picture/drawing | Procedure |
|---|---|---|---|

**2.3.6 Replacomont of capstan motor**

**Noto:** For removing and installing capstan motor, set the mechanism in the assembling position (refer to 2.4.1).

| | | | |
|---|---|---|---|
| 1 | Removing | 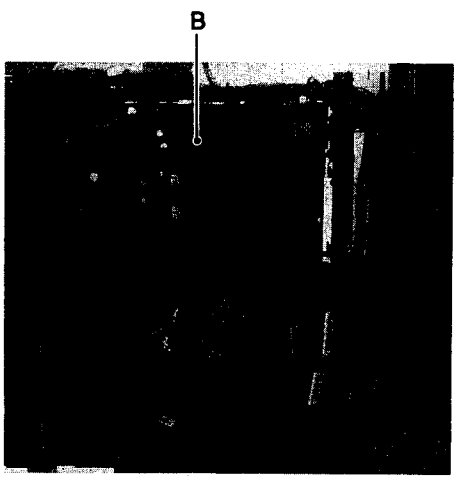 **Fig. 2-3-15** | 1) Remove the pinch roller arm assembly (refer to 2.3.5).<br>2) Remove the mode motor (refer to 2.3.8).<br>3) Remove five screws 1 and then remove the bottom cover A (refer to Fig. 2-3-3).<br>4) Remove two screws 2 and fold out the MCTL/SV board (refer to Fig. 2-3-4).<br>5) Disconnect the connector B (back side of the main deck, refer to Fig. 2-3-15). |
| | | 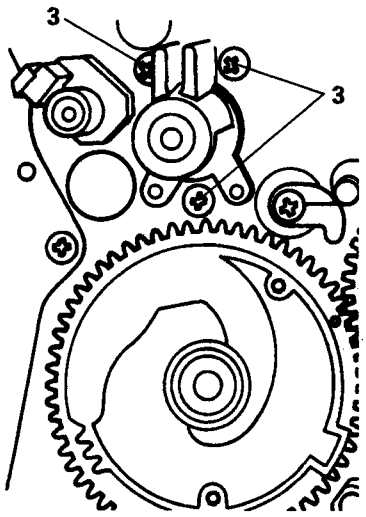 **Fig. 2-3-16** | 6) Remove three screws 3, and the capstan motor can be removed (back side of the main deck, refer to Fig. 2-3-16). Remove the capstan motor so as to pull it out of the back side of the main deck. |
| 2 | Installing | | 1) Install a new capstan motor in the reverse order of removing.<br>2) After replacement is completed, enter the set into the FG duty automatic adjustment mode for the capstan and reel motors and capstan stop servo (refer to 2.6).<br>3) Perform "2.4.2 Adjustment of pinch roller solenoid position". |

| No. | Item | Reference picture/drawing | Procedure |
|---|---|---|---|

### 2.3.7 Replecement of reel motor assembly

| | | | |
|---|---|---|---|
| 1 | Removing | 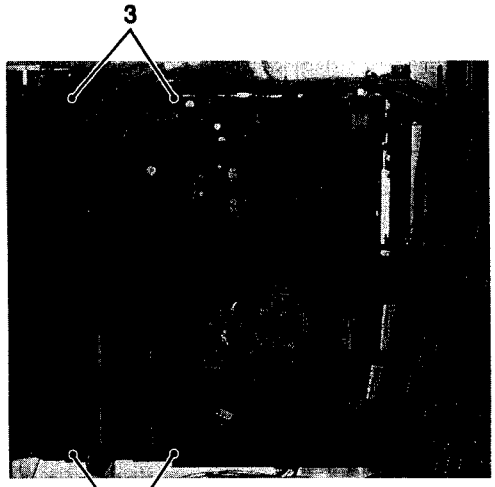 Fig. 2-3-17<br> 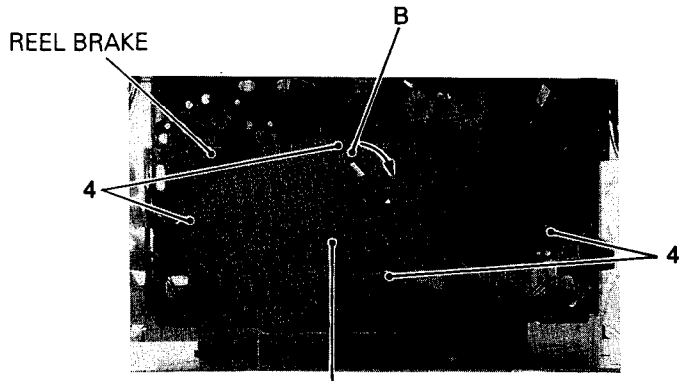 Fig. 2-3-18 | 1) Remove five screws 1 and then remove the bottom cover A (refer to Fig. 2-3-3).<br>2) Remove two screws 2 and fold out the MCTL/SV board (refer to Fig. 2-3-4).<br>3) Remove four screws 3 and remove the REEL MDA board (refer to Fig. 2-3-17).<br>4) Turn the mode motor counterclockwise (toward the rear side) by hand to enter the mechanism into the loading end status.<br>5) Change the position of the sensor LED's lock pin B to the mechanism assembling position (refer to Fig. 2-3-18).<br>6) Remove four screws 4 and remove the reel motor assembly C. |
| 2 | Installing | **Note:**<br>**When you use the new reel motor assembly, put two sheets on the both (take-up and supply) reel disks (sse the eymbol No. 11 on page 5-13.)**<br> 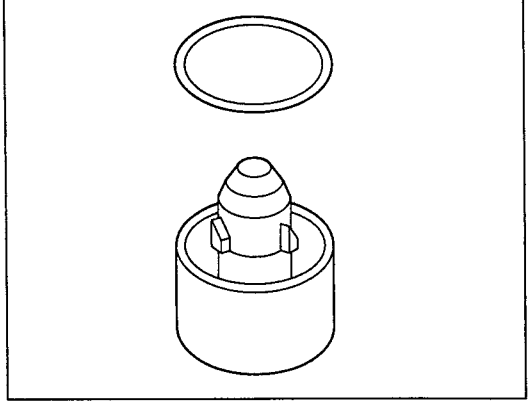 | 1) Set the sensor LED's lock pin of a new reel motor assembly in the mechanism assembling position (refer to Fig. 2-3-18).<br>2) Install the new reel motor assembly in the reverse order of removing. During this assembling, pay careful attention to the reel brake assembly not to get touched by the reel motor assembly.<br>3) Set the sensor LED's lock pin into the operation position.<br>4) Turn the mode motor clockwise (toward the front side) by hand to enter the mechanism into the unloading end status.<br>5) Enter the set into the FG duty automatic adjustment mode (refer to 2.6) for the capstan, reel and drum motors.<br>6) Check up on the adjustment items for the reel servo circuit (refer to 2.7). If there is something in need of adjustment, carry it out according to the adjustment procedure. |

| No. | Item | Reference picture/drawing | Procedure |
|---|---|---|---|

### 2.3.8 Replacement of mode motor

| | | | |
|---|---|---|---|
| 1 | Removing | 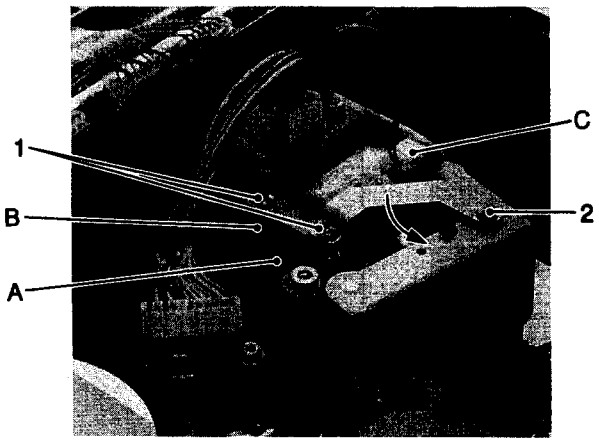 Fig. 2-3-19 | 1) Disengage the belt B from the motor pulley A (refer to Fig. 2-3-19).<br>2) Disconnect the connector C (refer to Fig. 2-3-19).<br>3) Remove two screws 1 and loosen a screw 2.<br>4) Remove the mode motor E together with the motor bracket D. |
| | | 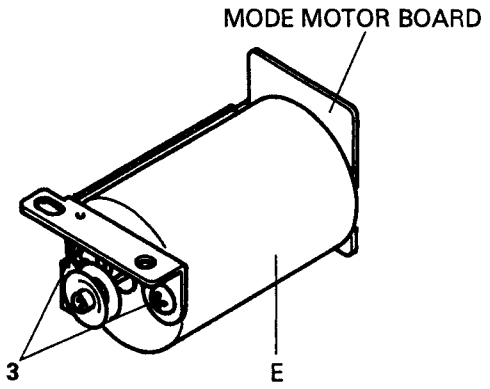 Fig. 2-3-20 | 5) Remove two screws 3 and detach the mode motor E from the motor bracket (refer to Fig. 2-3-20).<br>6) Remove the solder of motor's terminals, and then remove the MODE MOTOR BOARD. |
| 2 | Installing | | 1) Install a new mode motor in the reverse order of removing. |

| No. | Item | Reference picture/drawing | Procedure |
|---|---|---|---|

### 2.3.9 Replacement of reel brake assembly

| | | | |
|---|---|---|---|
| 1 | Removing | 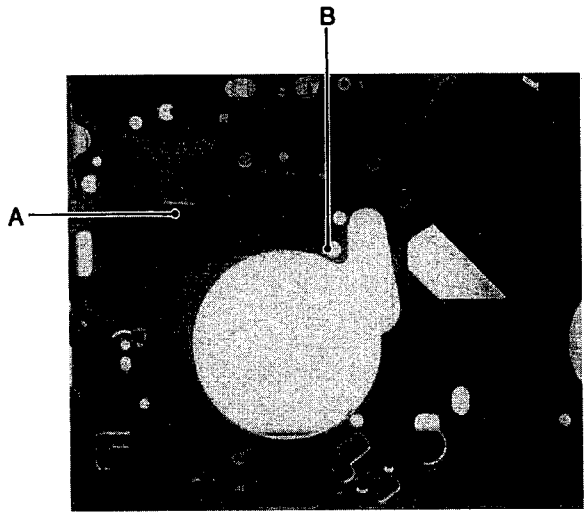 **Fig. 2-3-21** | 1) Remove the reel motor assembly (refer to 2.3.7).<br>2) Remove the slit washer A, and disengage the tension spring at the point B (refer to Fig. 2-3-21).<br>3) Remove the reel brake assembly while raising it up. |
| 2 | Installing | | 1) Install a new reel brake assembly in the reverse order of removing.<br>**Note:**<br>**When installing a new reel brake assembly, make sure to rsplace the slit washer A with new one, too.**<br>**See the symbol No. W2 on page 5-13.** |

| No. | Item | Reference picture/drawing | Procedure |
|---|---|---|---|

### 2.3.10 Replacement of take-up pole base assembly and take-up loading gear

**Note:** When replacing the take-up pole base assembly and take-up loading gear, make sure to do it in the condition that the pole base assembly and loading gear assembly of the supply side are normally set. For replacing those parts of both the take-up and supply sides at the same time, this service manual gives no mention about it.

| No. | Item | Reference picture/drawing | Procedure |
|---|---|---|---|
| 1 | Removing take-up pole base assembly | 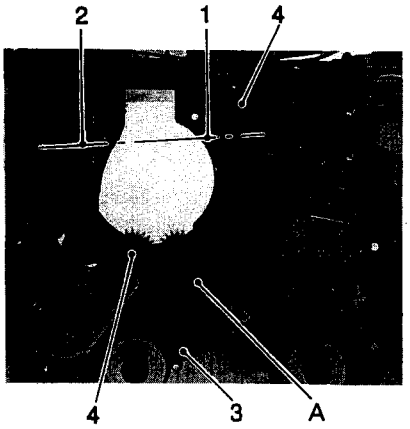 Fig. 2-3-22 | 1) Remove the drum assembly (refer to 2.3.2).<br>2) Remove a screw 1 (refer to Fig. 2-3-22). |
| | | 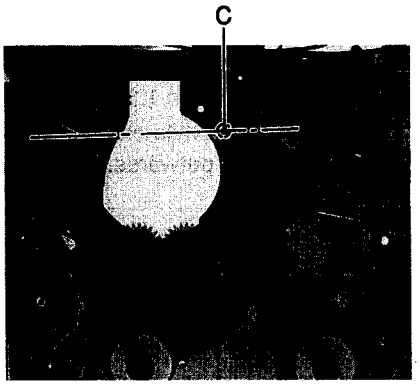 Fig. 2-3-23 | 3) Turn the mode motor ccunterclockwise (toward the rear side) by hand until the slant pole A of the take-up pole base assembly is positioned on a straight line connecting the center of the tapped hole for the screw 1 that has been removed in the above step 2) and the center of the tapped hole for the screw 2 with each other. (Refer to Fig. 2-3-23.)<br>4) Set the sensor LED's lock pin in the assembling position (refer to Fig. 2-3-18).<br>5) Remove cne screw 3 and two screws 4. Then remove the take-up loading assembly B. |
| | | 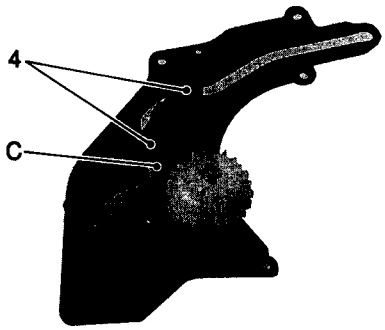 Fig. 2-3-24 | 6) Remove two screws 4 and remove the take-up pole base assembly C (refer to Fig. 2-3-24). |

| No. | Item | Reference picture/drawing | Procedure |
|---|---|---|---|
| 2 | Removing take-up loading gear | 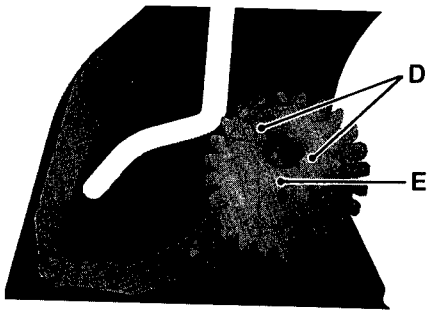 Fig. 2-3-25 | 7) Remove the take-up loading assembly (refer to 2.3.10, item 1, steps 1) to 4).<br>8) While pressing two pawls D retaining the loading gear E slightly inwards, remove the loading gear E. |
| 3 | Removing take-up loading gear spring stay | 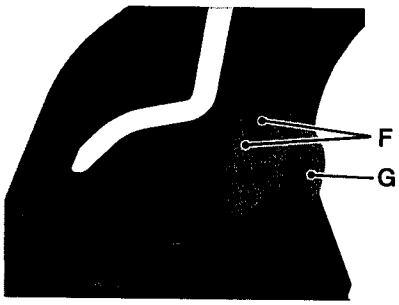 Fig. 2-3-26<br> 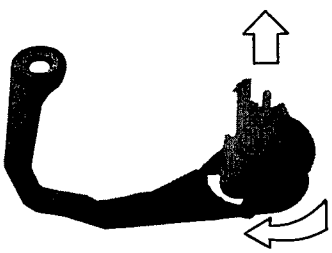 Fig. 2-3-27 | 9) Remove the take-up loading gear (refer to 2.3.10, item 1, steps 1 to 8).<br>10) While extending two pawls of the spring stay G outwards, pull them out upwards.<br>11) While turning the spring stay G clockwise, pull it out upwards (refer to Fig. 2-3-26). At that time, pay careful attention to the tension spring (T) H between the spring stay and take-up loading assembly not to lose it. |

| No. | Item | Reference picture/drawing | Procedure |
|---|---|---|---|
| 4 | Installing take-up loading gear spring stay | 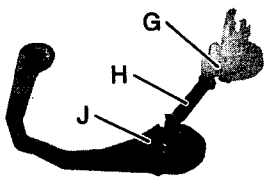 Fig. 2-3-29 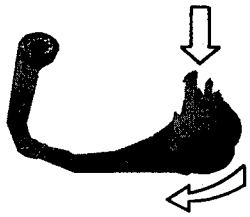 Fig. 2-3-29 Fig. 2-3-39 | 1) Engage the tension spring (T) H with the spring stay G and loading arm assembly J (refer to Fig. 2-3-28).<br>2) While turning the spring stay clockwise, fit it to the loading arm assembly (refer to Fig. 2-3-29).<br>3) Fit the loading arm assembly into the guide rail. |
| 5 | Installing take-up loading gear | 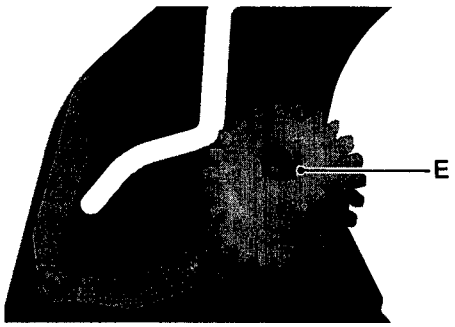 Fig. 2-3-31 | 4) Fit the loading gear E to the loading arm assembly so that the loading gear is set in the relative position shown in Fig. 2-3-31. |
| 6 | Installing take-up pole base assembly | 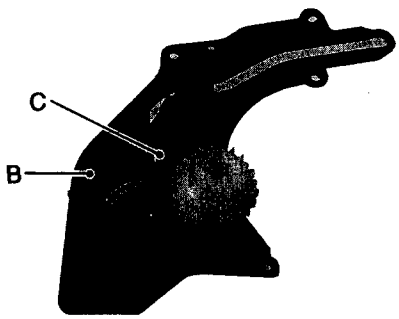 Fig. 2-3-32 | 5) Fit the take-up pole base assembly C to the take-up loading assembly B. At that time, tighten the screw with a torque of 0.34 N/m (3.5 kgf/cm). |

| No. | Item | Reference picture/drawing | Procedure |
|---|---|---|---|
| 7 | Installing take-up loading assembly | 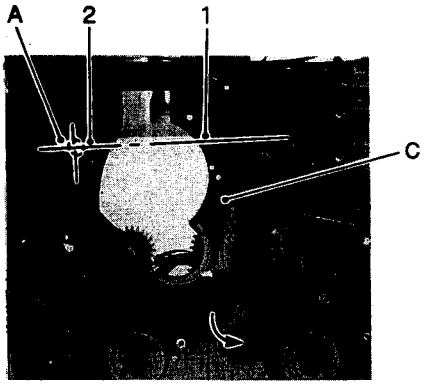 Fig. 2-3-33 | 6) Set the sensor LED's lock pin in the assembling position (refer to Fig. 2-3-18).<br>7) Turn the mode motor by hand so that the slant pole A of the supply pole base assembly is positioned on a straight line connecting the tapped hole for the screw 2 and the fitting hole 1 of the take-up loading assembly with each other. |
| | | 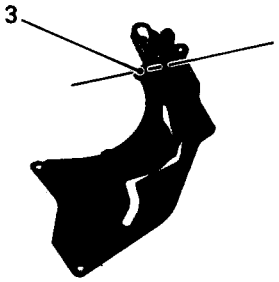 Fig. 2-3-34 | 8) Shift the slant pole B of the take-up loading assembly to a point nearby the fitting hole 3 (refer to Fig. 2-3-34). |
| | | 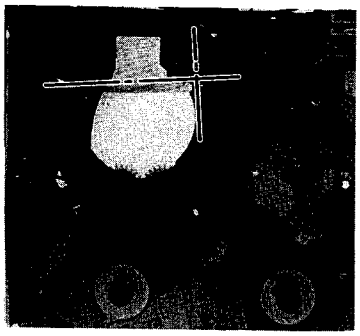 Fig. 2-3-35 | 9) In the condition of the step 7) mentioned above, fit the take-up loading assembly to the main deck C. At that time, make sure that the slant pole A of the supply pole base assembly, screw 1, take-up loading assembly fitting hole, slant pole of take-up pole base are aligned in a straight line as shown in Fig. 2-3-35.<br>10) Fit the take-up loading assembly B with the screws **3** and 4 (refer to Fig. 2-3-22). |
| | | 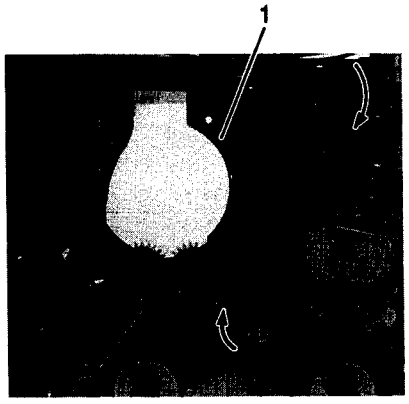 Fig. 2-3-36 | 11) Set the sensor LED's lock pin in the assembling position (refer to Fig. 2-3-18).<br>12) Turn the mode motor clockwise (toward the front side) by hand to enter the mechanism into the unloading end status (refer to Fig. 2-3-36).<br>13) Restore the drum assembly to the set.<br>14) Perform "2.9 Adjustment of tape transport system". |

| No. | Item | Reference picture/drawing | Procedure |
|---|---|---|---|

**2.3.11 Replecement of eupply polo beee eeeembly end eupply loeding geer**

**Noto:** When replacing the supply pole base assembly and supply loading gear, make sure to do it in the condition that the pole base assembly and loading gear assembly of the take-up side are normally set. For replacing those parts of both the take-up and supply sides at the same time, this service manual gives no mention about it.

| | | | |
|---|---|---|---|
| 1 | Removing supply pole base assembly | 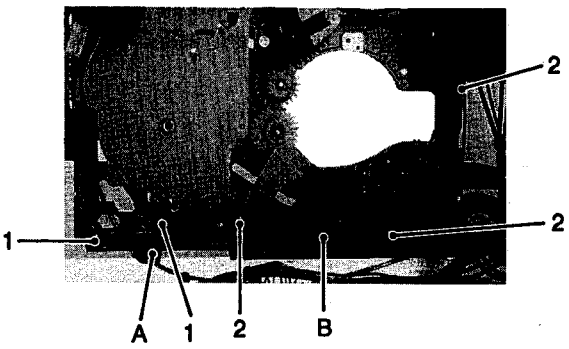 Fig. 2-3-37 | 1) Remove the drum assembly (refer to 2.3.2).<br>2) Turn the mode motor counterclockwise (toward the rear side) by hand until the mechanism reaches the loading end position.<br>3) After removing two screws 1, remove the board bracket A.<br>4) After removing three screws 2, remove the END SENSOR board B. |
| | | 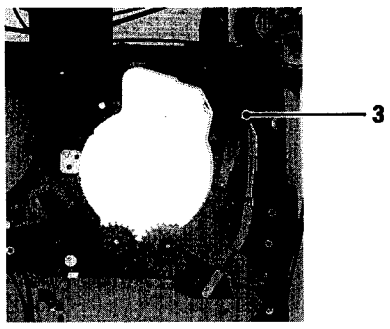 Fig. 2-3-39 | 5) Remove a screw 3, and the supply pole base can be removed. |
| 2 | Removing supply leading gear | 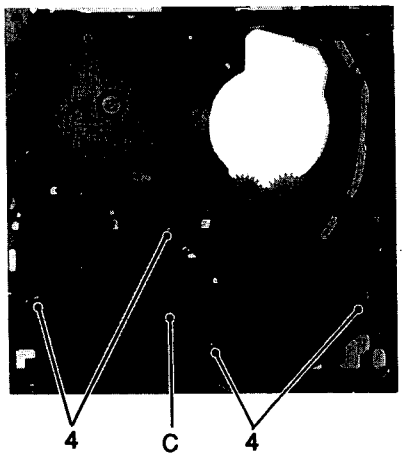 Fig. 2-3-39 | 6) Remove the supply pole base assembly (refer to 2.3.11, item 1, steps 1 to 5).<br>7) Remove four screws 4 and remove the reel motor assembly C. |

| No. | Item | Reference picture/drawing | Procedure |
|---|---|---|---|
| | | 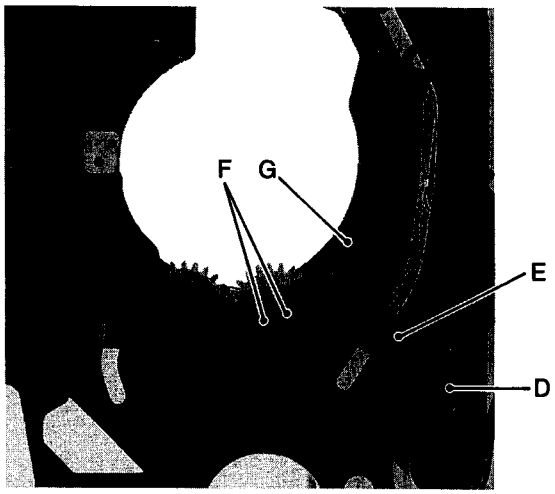 Fig. 2-3-40 | 8) Remove a slit washer D and then cancel lever E (refer to Fig. 2-3-40).<br>9) While pressing two pawls F retaining the loading arm assembly D slightly inwards, remove the loading arm assembly D (refer to Fig. 2-3-40). |
| | | 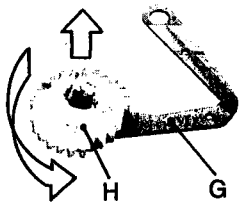 Fig. 2-3-41 | 10) While turning the supply loading gear H counterclockwise, pull it out upwards as shown in Fig. 2-3-41. At that time, pay careful attention to the tension spring (S) J between the supply loading gear and loading arm assembly not to lose it. (See Fig. 2-3-43) |

| No. | Item | Reference picture/drawing | Procedure |
|---|---|---|---|
| 3 | Installing supply loading gear | 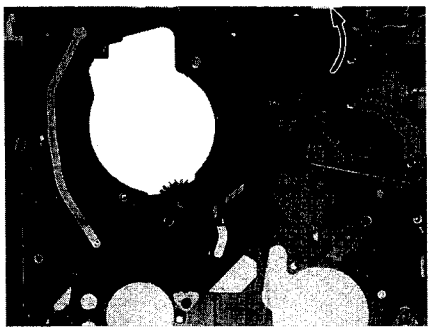 **Fig. 2-3-42** | 1) Turn the mode motor counterclockwise (toward the rear side) by hand until the mechanism reaches the loading end position (refer to Fig. 2-3-42). |
| | | 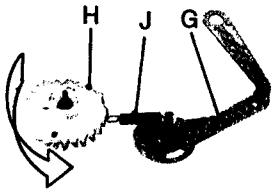  **Fig. 2-3-43** | 2) Engage the tension spring (S) J with the supply loading gear H and the loading arm assembly G (refer to Fig. 2-3-43). |
| | | 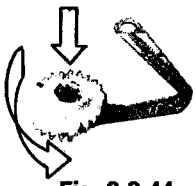 **Fig. 2-3-44** | 3) While turning the loading gear H counterclockwise, fit it into the loading arm assembly (refer to Fig. 2-3-44). |
| | | 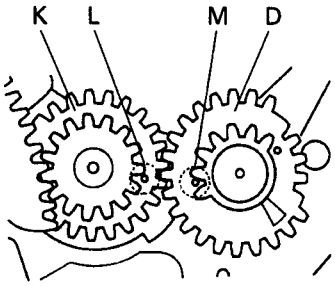  **Fig. 2-3-46** | 4) Set the supply loading gear D so that the reference hole of the take-up loading gear K and that of the supply loading gear D are relatively positioned with each other as shown in Fig. 2-3-45. |
| | | 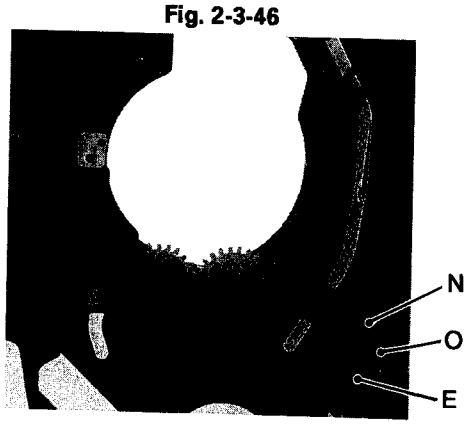  **Fig. 2-3-46** | 5) Fit the cancel lever E and torsion spring N with the slit washer O.<br>**Note:**<br>**When installing a new supply lusdlug gssr, make sure to replace tha slit washer O with new one, too.**<br>**See the symbol No. W3 en pege 5-13.** |

| No. | Item | Reference picture/drawing | Procedure |
|---|---|---|---|
| 4 | Installing supply pole base assembly | 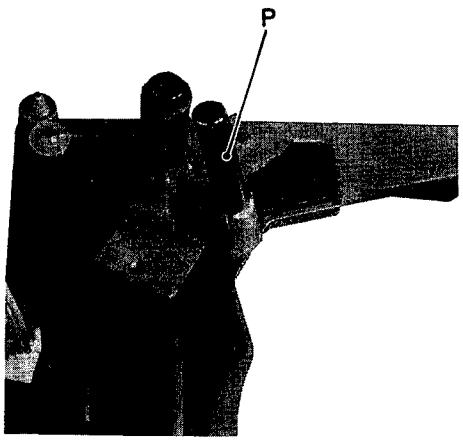 **Fig. 2-3-47** | 6) Fit the supply pole base assembly P into the guide rail while setting the stopper of the pole base assembly in the insertion hole of the guide rail (refer to Fig. 2-3-47). |
| | | 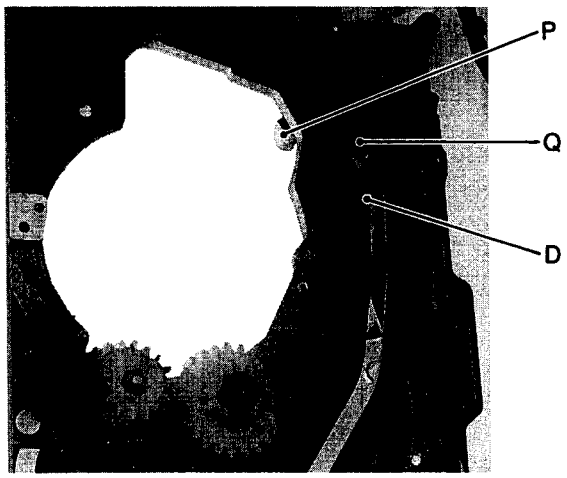 **Fig. 2-3-48** | 7) Fit the arm D of the supply loading assembly and the pole base assembly P so that the collar Q is sandwiched between them (refer to Fig. 2-3-48).<br>8) Install the reel motor assembly in the mechanism. (Refer to Fig. 2-3-39.)<br>9) Restore the END SENSOR board B to the original position. (Refer to Fig. 2-3-37.)<br>10) Turn the mode motor clockwise (toward the front side) by hand until the mechanism reaches the unloading end position.<br>11) Restore the drum assembly to the mechanism.<br>12) Perform "2.9 Adjustment of tape transport system". |

| No. | Item | Reference picture/drawing | Procedure |
|---|---|---|---|

**2.3.12 Repleeement of teke-up roller end teke-up tepe eereper**

| | | | |
|---|---|---|---|
| 1 | Removing | 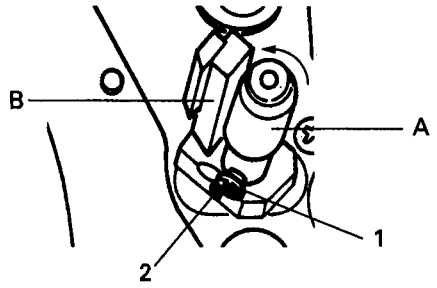 <br>**Fig. 2-3-49**<br> 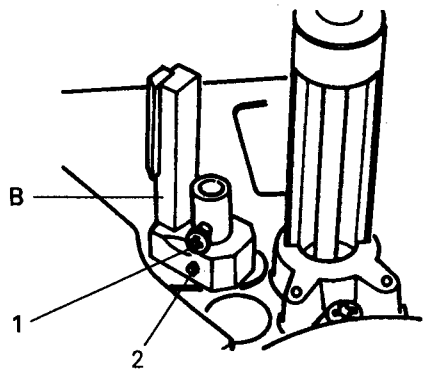 <br>**Fig. 2-3-50** | **Note:**<br>**After replacement of the take-up tape scraper, carry out "2.5.4 Adjustment of take-up roller height" without fail.**<br>1) Remove a screw 1 first, and then remove the take-up roller A while turning it counterclockwise (refer to Fig. 2-3-49).<br>2) Remove a screw 2, and the take-up tape scraper B can be removed together with the block (refer to Fig. 2-3-50). |
| 2 | Installing | 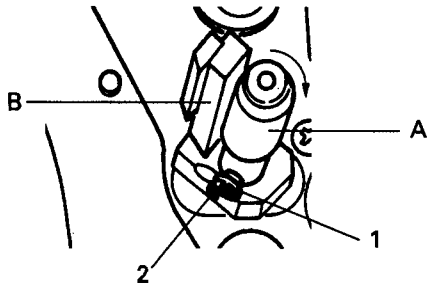 <br>**Fig. 2-3-51**<br> 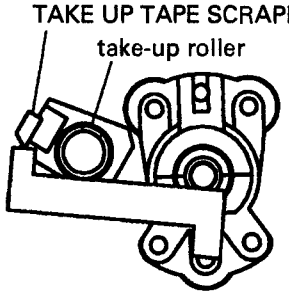 <br>**Fig. 2-3-52** | 3) Set the take-up tape scraper B in place and temporarily fix it with the screw 2.<br>4) Set the take-up roller A in place and temporarily fix it with the screw 1.<br>5) Adjust the setting position of the take-up tape scraper B with the take-up tape scraper fitting jig. After adjustment, tightly fix it with the screw 2.<br>**Note:** Use the R-side of the jig for the BR-D80/DB5 and its P-side for the BR-D50.<br>6) Carry out "2.9 Adjustment of tape transport system". |

| No. | Item | Reference picture/drawing | Procedure |
|---|---|---|---|

## 2.4 MECHANISM ASSEMBLING PGSITION

### 2.4.1 Assembling pesitien

**Note:** The mechanism of this set has close relation to the mechanism control circuit through the rotary encoder. In short, all operations of mechanism component parts and the mechanism as a whole are controlled by the rotational angle of the rotary encoder, or cam gear's rotational angle in other words. If any of those component parts is abnormally installed, it causes malfunction of the mechanism. When replacing or adjusting mechanism part, make sure to set the mechanism in the specified assembling position before proceeding to the service work.

| | | | |
|---|---|---|---|
| 1 | Assembling position | <br>**Fig. 2-4-1**<br> 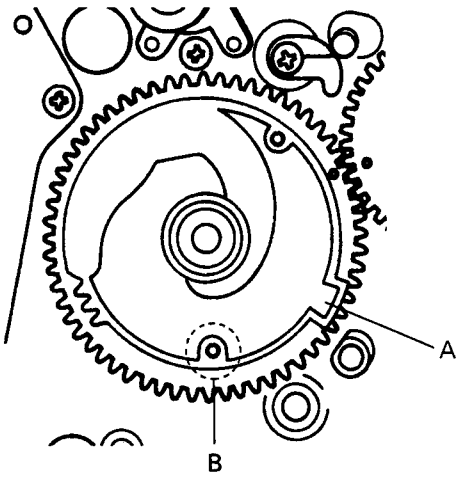 <br><br>**Fig. 2-4-2** | 1) Turn the mode motor clockwise (toward the front side) by hand until the pole base assembly reaches the unloading end position. (Refer to Fig. 2-4-1.)<br>2) Furthermore turn the mode motor clockwise (toward the front side) by hand until the hole B (refer to Fig. 2-4-2) in the control cam A overlaps the reference hcle in the main deck as viewed from the top. (Refer to Fig. 2-4-2).<br>3) The mechanism status shown in Fig. 2-4-2 is called the mechanism assembling position. |

| No. | Item | Reference picture/drewing | Procedure |
|---|---|---|---|
| 2 | Assembling position of control cam | 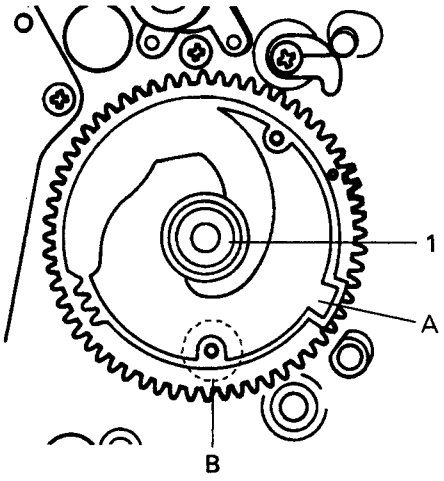 Fig. 2-4-3 | 1) Set the control cam with a slit washer in a position that the hole B in it overlaps the reference hole in the main deck as viewed from the top.<br>2) At that time, insert the arm gear's pin into the slit on the back of the control cam.<br>3) After this, until assembling mechanism is completed, lock the control cam by inserting a precision screwdriver or the like into the reference hole in the main deck through the hole B in the control cam. |
| 3 | Assembling position of pinch roller cam | 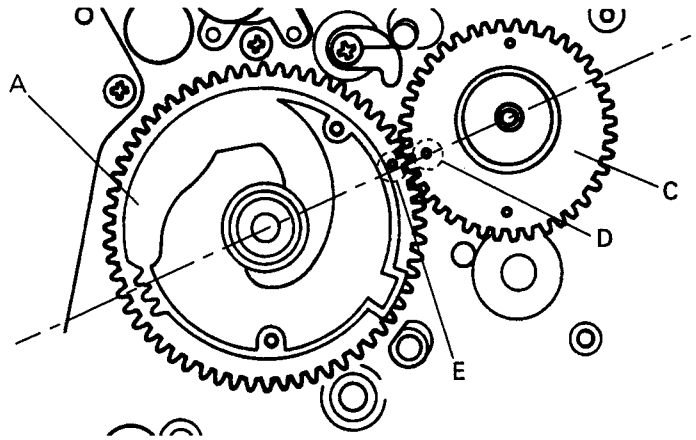 Fig. 2-4-4 | 4) Inset the control cam A so that the hole E in it and the hole D in the pinch roller cam C are aligned in a straight line connecting the respective shafts of both the control cam A and pinch roller cam C with each other. |
| 4 | Assembling position of rotary encoder | 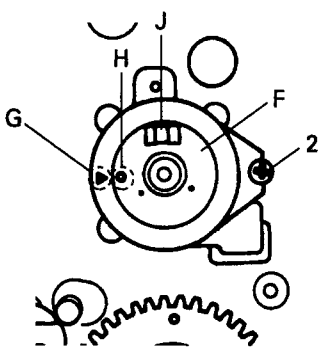 Fig. 2-4-5 | 5) Fit the rotary encoder F with the screw 2.<br>6) Set the rotary encoder's outer mark G and inner mark H to each other. |

| No. | Item | Reference picture/drawing | Procedure |
|---|---|---|---|
| 5 | Assembling position of cam gear | 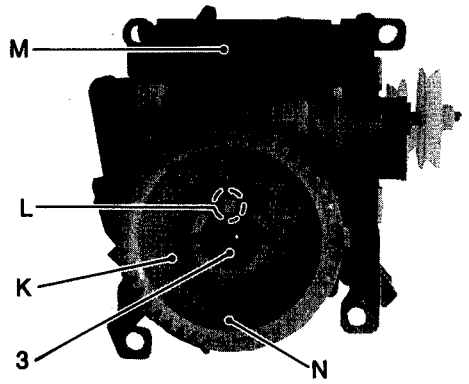 Fig. 2-4-6 | 7) Fit the cam gear K to the solenoid bracket M with the slit washer 3. |
| | | 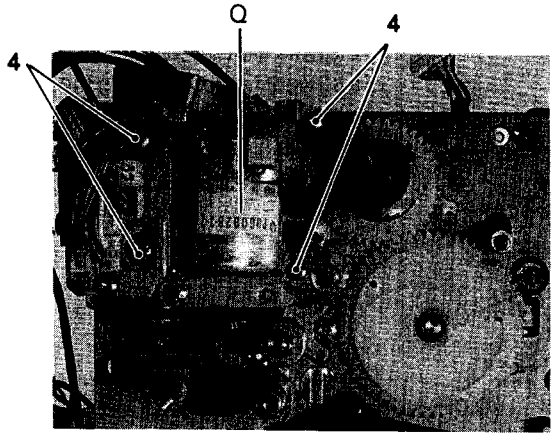 Fig. 2-4-7 | 8) Set the projection L of the cam gear K in the slit J of the rotary encoder F. (See Fig. 2-4-5)<br>9) Fit the mode motor assembly Q with the screw 4. |
| | | 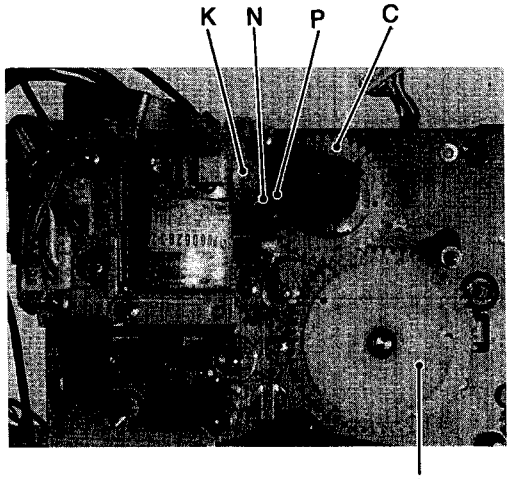 Fig. 2-4-6 | **Reference:**<br>When installing the mode motor assembly, make sure that the hole N in the cam gear and the hole P in the pinch roller cam are aligned in a straight line connecting the respective shafts of both the cam gear and pinch roller cam C with each other. |

| No. | Item | Reference picture/drawing | Procedure |
|---|---|---|---|

| | | | |
|---|---|---|---|
| 6 | Assembling position of take-up loading gear, supply loading gear, cancel lever and arm gear | **Note:** **For assembling the take-up loading gear, supply loading gear, cancel lever, refer to the manual of "2.3.10 Replacement of take-up pole base assembly and take-up loading gear" and "2.3.11 Replacement of supply pole base assembly and supply loading gear". The following is just a mentioning the positional relation between those geer and the lever in the mechanism assembly.** 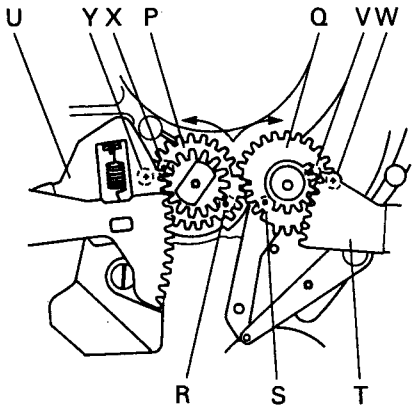  **Fig. 2-4-9** | 1) On the assumption that the take-up loading gear P turns counterclockwise while the supply loading gear Q turns clockwise, two holes R and S in the respective gears are aligned in a straight line connecting those shafts with each other. (Actually, they don't turn as said above.)<br>2) If so, the hole X in the take-up loading gear and the hole U in the arm gear overlap each other while the hole V of the supply loading gear and the hole W of the cancel lever T overlap each other. |

### 2.4.2 Adjustment of pinch roller solenoid position

| | | | |
|---|---|---|---|
| 1 | Position adjustment | 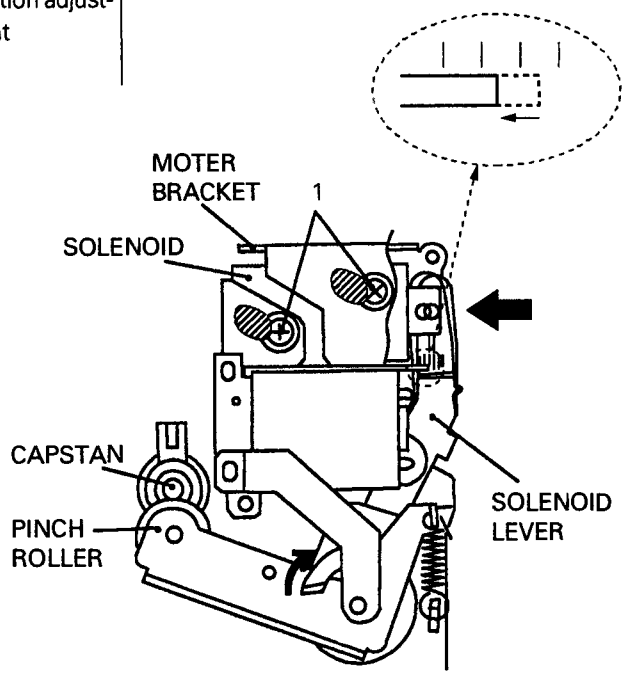  **Fig. 2-4-10** | 1) Turn the mode motor in the loading direction (toward the rear side) by hand until the pinch roller goes down to the lowest position (just before it goes up toward the capstan shaft).<br>2) Press the solenoid lever in the direction of the arrow (◀) by hand so as to make the pinch roller contact with the capstan shaft.<br>3) Press the solenoid lever by hand furthermore, and check to see if it moves from the position of the preceding step 2) for 1 ± 0.5 graduation.<br>4) If the movement is less or more than 1 ± 0.5 graduation, loosen two screws 1 to adjust the position of the solenoid so that it moves for 1 ± 0.5 graduation.<br>5) Press the solenoid lever moreover to check to see if the pinch roller press lever minutely turns clockwise (in the direction of the arrow in the figure) after the pinch roller contacts the capstan shaft.<br>6) If the check result is satisfactory, lock the screws 1 with sorew sealant. |

| No. | Item | Reference picture/drawing | Procedure |
|---|---|---|---|

### 2.4.3 Adjustment of tension sensor position

| | | | |
|---|---|---|---|
| 1 | Position adjustment | 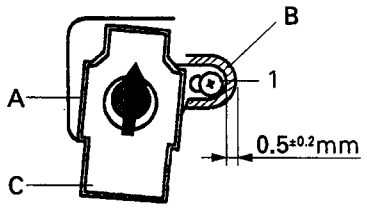 <br>**Fig. 2-4-11**<br> 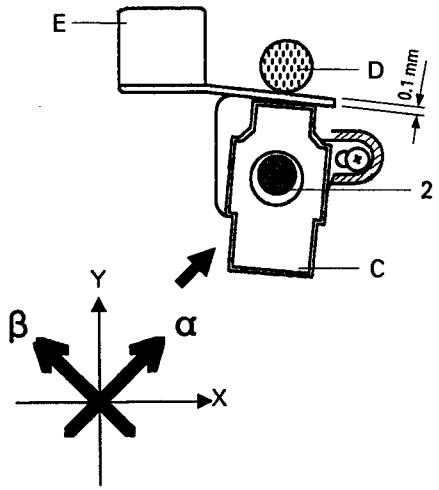 <br>**Fig. 2-4-12** | **Note:**<br>**If the position of the tension sensor is adjusted, it needs to adjust "tansion bias", "tenaion gain", "back tension in play moda", "reverse (X1) torque" again aftar this adjnstment.**<br>1) Turn off the power and remove the cassette housing assembly (refer to 2.3.1).<br>2) Turn the mode motor counterclockwise (toward the rear side) by hand to set the mechanism in the loading end position.<br>3) Loosen the screw 1 and adjust the position of the tension sensor base so that the tension sensor base A and the cut portion of the main deck (shaded portion B) are relatively positioned as shown in Fig. 2-4-11.<br>4) Then, move the tension sensor C in the direction of arrow (↑) and tighten the screw 1. (Refer to Fig. 2-4-11.)<br>5) Slightly loosen the screw 2.<br>6) Insert a spacer E (feeler of 0.1 mm thick) between the tension sensor C and tension arm shaft D.<br>7) While pressing the tension sensor C in the direction of the arrow (↙), adjust the position of the tension sensor C so that the clearance between the tension sensor C and tension arm shaft D is 0.1 mm. Then, tighten the screw 2 for fixing.<br>8) Lock the screws 1 and 2 with screw sealant.<br>9) Turn the mode motor clockwise (toward the front side) by hand to set the mechanism in the unloading end position, and remove the spacer E.<br>10) Restore the cassette housing assembly to the set. |

| No. | Item | Measuring instruments & Input signals | Mode | Measuring point (◎)<br>Adjustment parts (ⓣ)<br>Adjustment level (☆) | Adjustment procedure |
|---|---|---|---|---|---|

## 2.5 PRESET OF TRACKING VR

| | | | | | |
|---|---|---|---|---|---|
| 1 | Preset of tracking VR | | TEST mode<br>85 0000 | ◎ Counter display<br>☆ TRACKING control (on front panel)<br>" 85 End "<br>ⓣ indication End | **Note:**<br>**This adjustment is required after replacement of the tracking VR.**<br>1) Enter the set into the TEST mode.<br>2) Press the MENU or SET button so that the counter display shows " 85 0000 ".<br>3) Set the TRACKING control at the center click position.<br>4) Press the COUNTER PRESET button.<br>5) Confirm that " 85 End " is appearing on the counter display. |

## 2.6 AUTOMATIC ADJUSTMENT OF FG DUTY OF CAPSTAN AND REEL MOTORS AND CAPSTAN STOP SERVO

**Noto:** This adjustment will be performed by the set itself in the automatic adjustment mode.

| | | | | | |
|---|---|---|---|---|---|
| 1 | Automatic adjustment of FG duty of capstan and reel motors and capstan stop servo | | TEST mode<br>Sd 0000 | | 1) Enter the set into the TEST mode.<br>2) Press the MENU or SET button so that the counter display shows " Sd 0000 ".<br>3) Press the COUNTER RESET button to start the automatic adjustment.<br>4) The reel motor, capstan motor and drum motor start one after another in this order. After the last motor completely stops, confirm that the counter display shows " Sd End ".<br>**Note:**<br>**If " Sd End " still appears on the count-er dispiay, it is possible that thare is a failure in connection or part. In such an event, check tha cauaa nf troubia.**<br>5) Turn off the power to quit the TEST mode. |

| No. | Item | Measuring instruments & Input signals | Mode | Measuring point ( ◎ )<br>Adjustment parts ( ⓣ )<br>Adjustment level ( ☆ ) | Adjustment procedure |
|---|---|---|---|---|---|

## 2.7 ADJUSTMENT OF REEL SERVO CIRCUIT

**Notes:**
- Make sure to reset (rewinding) the cassette torque meter in the SEARCH (X10) mode. Never do it in the FF, REW or REEL SEARCH mode, because there is a high probability that the cassette torque meter will be damaged in such a mode.
- If the cassette torque meter reaches the tape end or beginning in the middle of adjustment, make a fresh start of each adjustment from the step 1).
- All measuring points and adjustment parts are located on the MCTL/SV board unless otherwise specified.

### 2.7.1 Adjustment of tension sensor

| No. | Item | Measuring instruments & Input signals | Mode | Measuring point ( ◎ )<br>Adjustment parts ( ⓣ )<br>Adjustment level ( ☆ ) | Adjustment procedure |
|---|---|---|---|---|---|
| 1 | Tension bias adjustment | Digital voltmeter | TEST mode<br>65 0000 | ◎ Between TP12 and TP13<br>ⓣ BIAS (VR2)<br>☆ 0.05 ± 0.05 V | 1) Enter the set into the TEST mode.<br>2) Press the MENU or SET button so that the counter display shows " 65 0000 ".<br>3) Press the COUNTER RESET button.<br>4) Turn the JOG dial in the FWD direction to set the mechanism in the loading end position.<br>5) Turn VR1 on the MCTL/SV board full counter-clockwise.<br>6) Check that the tension arm is turned to the utmost in contact with the supply roller 1.<br>7) Adjust VR2 to obtain the specified level at the measuring point. |
| 2 | Tension gain adjustment | Digital voltmeter | TEST mode<br>65 0000 | ◎ Between TP12 and TP13<br>ⓣ GAIN (VR1)<br>☆ 1.85 ± 0.1 V | 8) Set the paralle check plate. (Refer to Fig. 2-7-2.)<br>9) Adjust VR1 to obtain the specified level at the measuring point.<br>10) Remove the positioning jig and turn the JOG dial in the REV direction to set the mechanism into the unloading end position.<br>11) Press the SELECT button to make the counter display show " 65 End ".<br>**Note:**<br>**If the specified level cannot be obtained, repeat "2.4.3 Adjustment of tenelon sensor position".** |

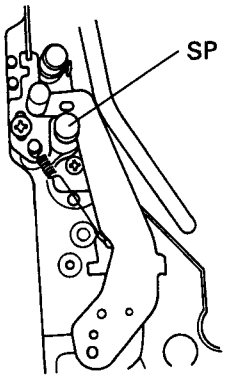


**Fig. 2-7-1**

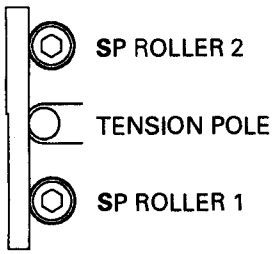


**Fig. 2-7-2**

| No. | Item | Measuring instruments & Input signals | Mode | Measuring point ( ◎ )<br>Adjustment parts ( ⓣ )<br>Adjustment level ( ☆ ) | Adjustment procedure |
|---|---|---|---|---|---|

### 2.7.2 Adjustment ef torque

| | | | | | |
|---|---|---|---|---|---|
| 1 | Adjustment of play supply torque | Cassette torque meter PUJ42881 | TEST mode<br>60 00 00 | ◎ Supply side (Cassette torque meter)<br>ⓣ JOG dial (front panel)<br>☆ 0.0057 N/m<br>(53 grf/cm) | 1) Enter the set into the TEST mode.<br>2) Press the MENU or SET button so that the counter display shows " 60 00 00 ".<br>3) Press the COUNTER RESET button.<br>4) Insert the cassette torque meter.<br>5) Press the PLAY button to start tape travel.<br>6) Turn the JOG dial to obtain the specified torque at the measuring point.<br>7) Press the SELECT button.<br>8) Press the STOP button, and the adjustment value is recorded in the memory with indication on the counter display.<br>9) Press the EJECT button for taking the cassette torque meter out of the set.<br>**Note:**<br>**If the cassette torque meter reaches the tape end before the STOP button is pressed, make a fresh start of this adjustment from the step 1).** |

| No. | Item | Measuring instruments & Input signals | Mode | Measuring point (◎)<br>Adjustment parts (⊕)<br>Adjustment level (☆) | Adjustment procedure |
|---|---|---|---|---|---|
| 2 | Adjustment of loading supply torque | Cassette torque meter PUJ42881 | TEST mode<br>61 0000 | ◎ Supply side (Cassette torque meter)<br>⊕ JOG dial (front panel)<br>☆ 0.0029 N/m (30 grf/cm) | 1) Enter the set into the TEST mode.<br>2) Press the MENU or SET button so that the counter display shows "61 0000".<br>3) Press the COUNTER RESET button.<br>4) Insert the cassette torque meter.<br>5) Press the PLAY button to start tape travel.<br>6) Turn the JOG dial to obtain the specified torque at the measuring point.<br>7) Press the SELECT button.<br>8) Press the STOP button, and the adjustment value is recorded in the memory with indication on the counter display.<br>9) Press the EJECT button for taking the cassette torque meter out of the set.<br>**Note:**<br>**If the cassette torque meter reaches the tape end before the STOP button is pressed, make a fresh start of this adjustment from the step 1).** |
| 3 | Adjustment of play take-up torque | Cassette torque meter PUJ42881 | TEST mode<br>62 0000 | ◎ Take-up side (Cassette torque meter)<br>⊕ JOG dial (front panel)<br>☆ 0.0167 N/m (170 grf/cm) | 1) Enter the set into the TEST mode.<br>2) Press the MENU or SET button so that the counter display shows "62 0000".<br>3) Press the COUNTER RESET button.<br>4) Insert the cassette torque meter.<br>5) Press the PLAY button to start tape travel.<br>6) Turn the JOG dial to obtain the specified torque at the measuring point.<br>7) Press the SELECT button.<br>8) Press the STOP button, and the adjustment value is recorded in the memory with indication on the counter display.<br>9) Press the EJECT button for taking the cassette torque meter out of the set.<br>**Note:**<br>**If tha cassette torque metar reaches the tape end before the STOP button is pressed, make a fresh start of this adjustment from the step 1).** |

| No. | Item | Measuring instruments & Input signals | Mode | Measuring point ( ◎ )<br>Adjustment parts ( ⓣ )<br>Adjustment level ( ☆ ) | Adjustment procedure |
|---|---|---|---|---|---|
| 4 | Adjustment of reverse (x1) supply torque | Cassette torque meter PUJ42881B | TEST mode<br>SF 00 00 | ◎ Supply side (Cassette torque meter)<br>ⓣ JOG dial (front panel)<br>☆ 0.0173 N/m (176 grf/cm) | 1) Enter the set into the TEST mode.<br>2) Press the MENU or SET button so that the counter display shows " SF 00 00 ".<br>3) Press the COUNTER RESET button.<br>4) Insert the cassette torque meter.<br>5) Press the PLAY button and then set the SEARCH dial to X-1.<br>6) Turn the JOG dial to obtain the specified torque at the measuring point.<br>7) Press the SELECT button.<br>8) Press the STOP button, and the adjustment value is recorded in the memory with indication on the counter display.<br>9) Press the EJECT button for taking the cassette torque meter out of the set.<br>**Note:**<br>**If the cassette torque meter reaches the tape end before the STOP button is pressed, make a fresh start of this adjustment from the step 1).** |

| No. | Item | Measuring instruments & Input signals | Mode | Measuring point ( ◎ )<br>Adjustment parts ( ⇧ )<br>Adjustment level ( ☆ ) | Adjustment procedure |
|---|---|---|---|---|---|

## 2.8 ADJUSTMENT OF A/C HEAD

**Notee:** • If the A/C head is abnormally mounted, it may cause decrease of output level and deterioration of S-to-N ratio in playback of a recorded tape, or the servo failure as the worst case because the head fails in reading control signals.
• Set the TRACKING control at the center click position.

### 2.8.1 Coeree adjuetment

**Note:** The following rough adjustments shall be performed when the A/C head is reinstalled after it was once removed.

| | | | |
|---|---|---|---|
| 1 | Temporary installation | 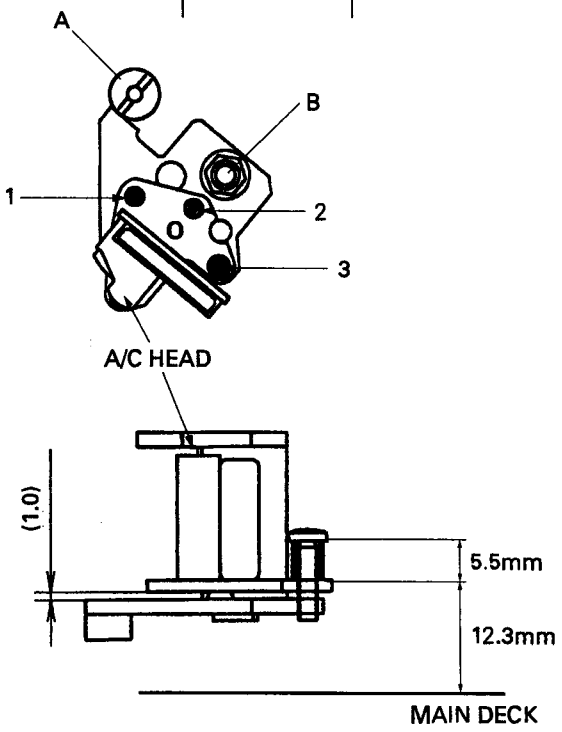 <br>**Fig. 2-8-1** | 1) Temporarily install the A/C head as shown by Fig. 2-8-1.<br>2) At that time, make the A/C head base parallel with the A/C head arm by adjusting the screws 1 and 2. |
| 2 | Rough adjustment of head tilt | 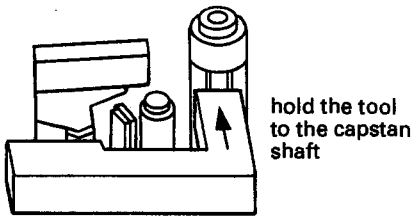 <br>**Fig. 2-8-2 (A)**<br> 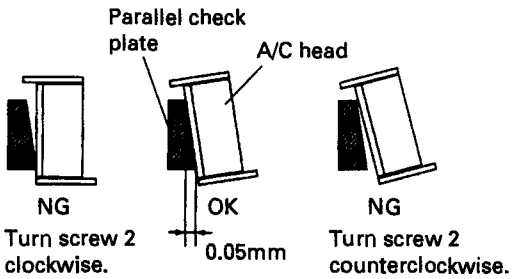 <br>**Fig. 2-8-2 (B)** | 3) While using the parallel check plate as the reference, adjust the screw 2 so that the inclination of the A/C head is parallel with the A/C head inclination adjusting tool as shown in Fig. 2-8-2.<br>4) While playing back a recorded tape (DS-104), check to see if the tape is damaged or wrinkled at the upper part of the lower flange of the take-up guide roller or not. If it is damaged or wrinkled, fine adjust the height of the take-up guide roller. |

| No. | Item | Measuring instruments & Input signals | Mode | Measuring point (◎)<br>Adjustment parts (⊕)<br>Adjustment level (☆) | Adjustment procedure |
|---|---|---|---|---|---|
| 3 | Rough adjustment of head height | Audio tester or Oscilloscope<br>Alignment tape<br>MHPE | TEST mode<br>69 00 00 | ◎ TP3 (CH1)<br>[ANA AUDIO]<br>◎ TP4 (CH2)<br>[ANA AUDIO]<br>☆ Nut B<br>Maximum output level (both CH1, CH2) | 5) Enter the set into the TEST mode.<br>6) Press the MENU or SET button so that the counter display shows " 69 00 00 ".<br>7) Press the COUNTER RESET button.<br>8) Insert the audio alignment tape and play it back.<br>9) Adjust the nut B to maximize the audio level at the measuring point. (Refer to Fig. 2-8-3.) |
| 4 | Rough adjustment of head azimuth | Audio tester or Oscilloscope<br>Alignment tape<br>MHPE | TEST mode<br>69 00 00 | ◎ TP3 (CH1)<br>[ANA AUDIO]<br>◎ TP4 (CH2)<br>[ANA AUDIO]<br>⊕ Screw 1<br>☆ Maximum output level (both CH1, CH2) | 10) Adjust the screw 1 to maximize the audio level at the measuring point.<br>11) Repeat the above steps 3) and 4) to check to see whether there is something abnormal or not. If they need readjustment, repeat the steps from 3) through 10) several times until satisfactory results can be obtained.<br>12) Check the tilt, height and azimuth of the head again. |

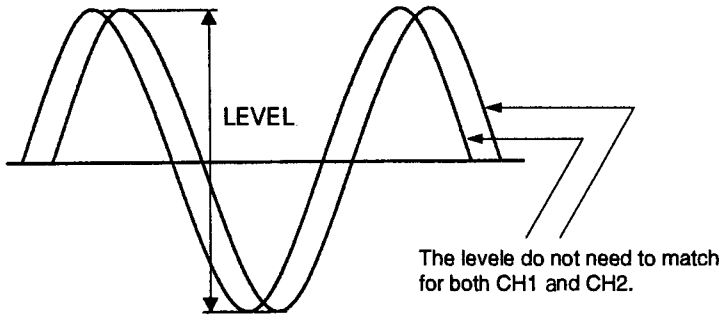


**Fig. 2-8-3**

| No. | Item | Measuring instruments & Input signals | Mode | Measuring point (◎)<br>Adjustment parts (Ⓣ)<br>Adjustment level (☆) | Adjustment procedure |
|---|---|---|---|---|---|

### 2.8.2 Adjustment of X-value

**Note:** Set the TRACKING control to the center click position and the AUTO TRACKING switch to OFF.

| | | | | | |
|---|---|---|---|---|---|
| 1 | X-value adjustment | Oscilloscope (V-rate, 10:1)<br>Alignment tape MSHP-X for PV X-value adjustment | TEST mode<br>67 00 00 | ◎TP1 [RF PR01]<br>◎TP12 [PV PROCESS]<br>Ⓣ Taper nut A<br>☆ Pulse timing shown in Fig. 2-8-4 | 1) Enter the set into the TEST mode.<br>2) Press the MENU or SET button so that the counter display shows "67 00 00".<br>3) Press the COUNTER RESET button.<br>4) Insert the alignment tape MSHP-X for PV X-value adjustment and play it back.<br>5) Observe the waveform at the measuring point through the oscilloscope.<br>6) Adjust the taper nut A so that the amplitude of RF waveform is maximum and the phase of non-recorded portion corresponds to the rise timing of FRP pulse.<br>7) While turning the TRACKING control clockwise and counterclockwise, confirm that the amplitude of the RF waveform is maximum as it is set at the center click position.<br>8) Press the SELECT button.<br>9) Press the STOP button. |

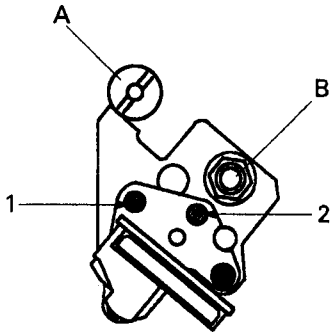


**Fig. 2-8-4**

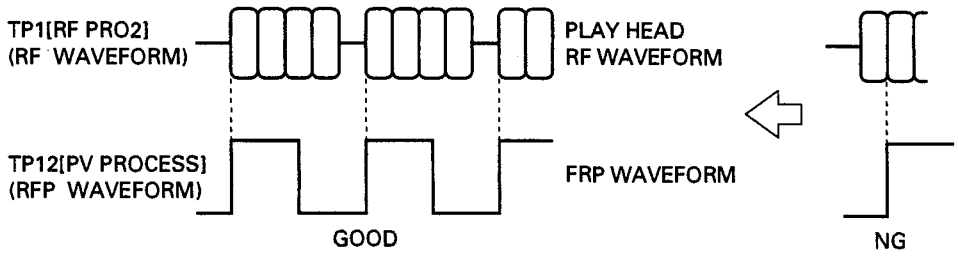


**Fig. 2-8-5**

| | | | | | |
|---|---|---|---|---|---|
| 2 | Head tilt check | | | | 10) Check the tilt of the A/C head with the A/C head parallel check plate.<br>11) If there is something wrong, repeat "2.8.1 Coarse adjustment" from the step 3) through 10). |

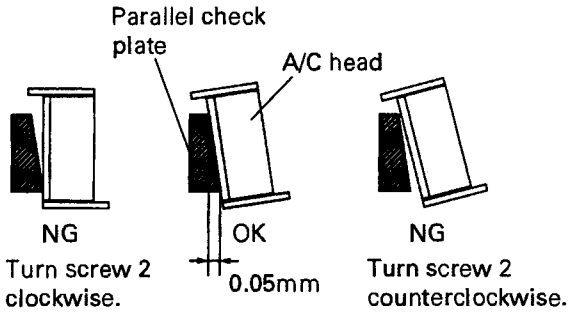


**Fig. 2-8-8**

| No. | Item | Measuring instruments & Input signals | Mode | Measuring point ( ◎ )<br>Adjustment parts ( ⓣ )<br>Adjustment level ( ☆ ) | Adjustment procedure |
|---|---|---|---|---|---|

### 2.8.3 Adjustment of azimuth

| | | | | | |
|---|---|---|---|---|---|
| 1 | Check of tape's lower edge regulation by take-up roller | VHS tape | TEST mode<br>69 00 00<br>PLAY | | 1) Play a VHS tape.<br>2) Check to see if the lower edge regulation of tape by the take-up roller's lower flange smoothly transports the tape and it does not damage or wrinkle it. If the tape is damaged or wrinkled at that point, adjust the height of the take-up roller. |
| 2 | Adjustment of A/C head azimuth | Oscilloscope (10:1)<br>Alignment tape MHPE | TEST mode<br>69 00 00<br>PLAY | ◎ TP3 (CH1) [ANA AUDIO]<br>◎ TP4 (CH2) [ANA AUDIO]<br>ⓣ Screw 1<br>☆ Match CH1 and CH2 in phase with each other. | 3) Play back the alignment tape MHPE.<br>4) Adjust the screw 1 so that CH1 and CH2 have maximum amplitude and match with each other in the phase at the respective measuring points. |

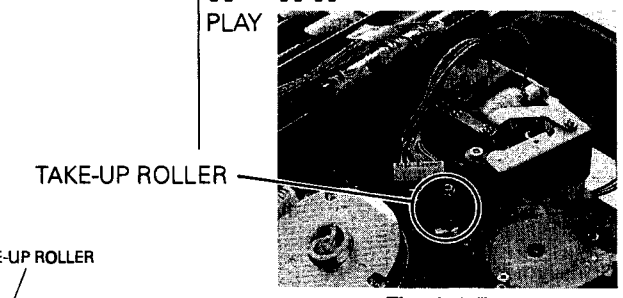


Fig. 2-8-7

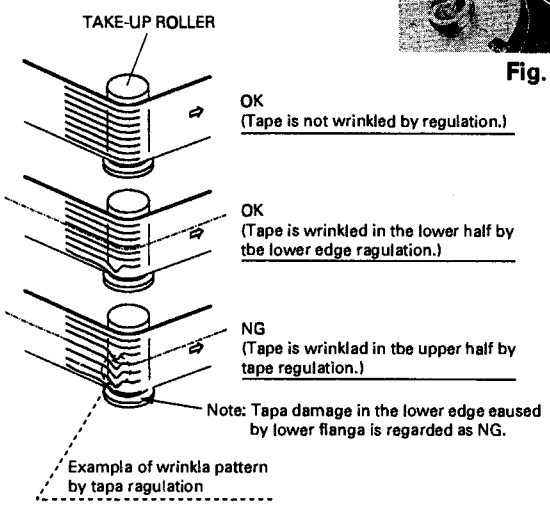


Fig. 2-8-8

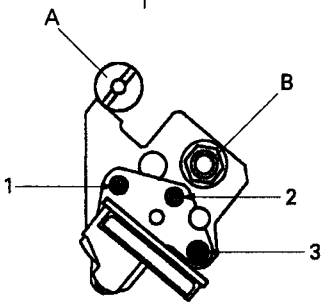


Fig. 2-8-9

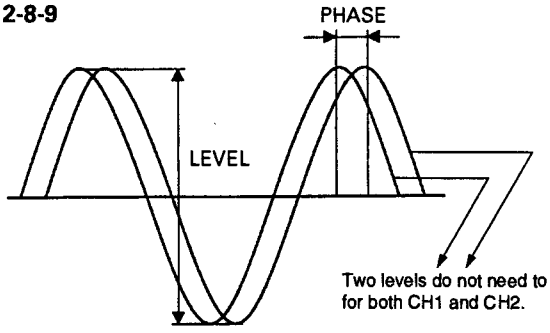


Fig. 2-8-10

| No. | Item | Measuring instruments & Input signals | Mode | Measuring point ( ◎ )<br>Adjustment parts ( ⓣ )<br>Adjustment level ( ☆ ) | Adjustment procedure |
|---|---|---|---|---|---|
| 3 | Check of tape travel in SEARCH mode | VHS tape | TEST mode<br>69 00 00 /<br>SEARCH FWD<br>SEARCH REV | ◎ Between take-up guide roller - capstan - take-up guide arm roller | 5) While playing a VHS tape alternately in the SEARCH FWD and SEARCH REV modes, check to see if there is any damage or wrinkle in the tape.<br>6) If the tape is wrinkled or twisted, adjust the height of the take-up guide arm roller. |
| 4 | Check of head azimuth after SEARCH tape travel | Alignment tape MHPE | TEST mode<br>69 00 00<br>PLAY | ◎ TP3 (CH1) [ANA AUDIO]<br>◎ TP4 (CH2) [ANA AUDIO]<br>ⓣ Screw 1<br>☆ Match CH1 and CH2 in phase with each other. | 7) Repeat the above steps 3) and 4) for final check. If there is something unsatisfactory, fine adjust the screw 1. |

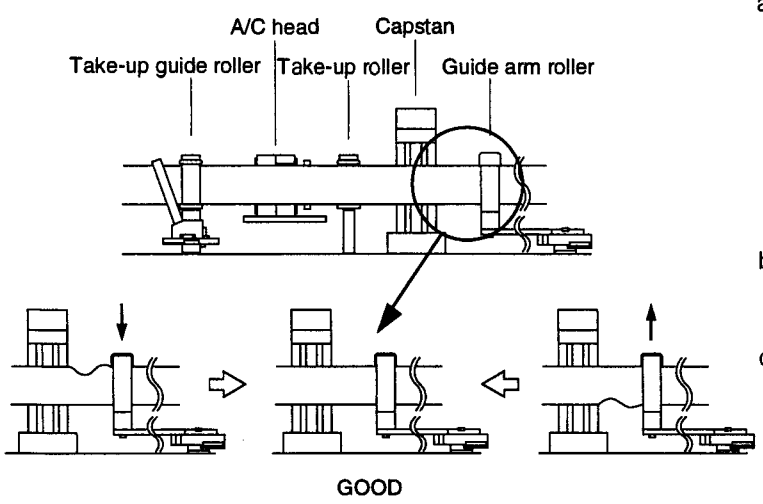


**• Special adjustment technique**

a) As a coarse adjustment, play a tape in the FWD mode and check to see if the tape sags or gets loose partially between the capstan and take-up guide arm roller or not. If the tape is loose in the upper part, lower the take-up guide arm roller. Or, if the tape is loose in the lower part, raise the take-up guide arm roller to take up the slack in the tape.

b) Check that the take-up guide roller regulates tape travel by the lower edge in the FWD PB mode.

c) Adjust the height of the take-up guide arm roller precisely so that tape travels on the same level in both the REV PB and FWD PB modes.

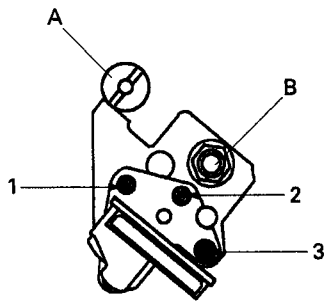


**Fig. 2-8-11**

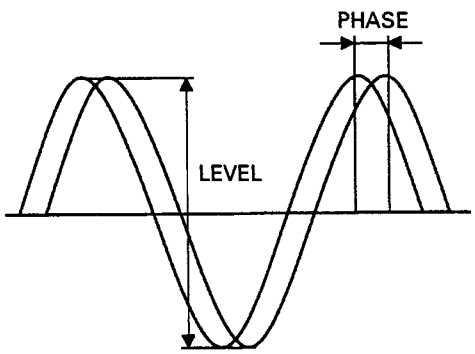


**Fig. 2-8-12**

| No. | Item | Measuring instruments & Input signals | Mode | Measuring point (◎)<br>Adjustment parts (⇧)<br>Adjustment level (☆) | Adjustment procedure |
|---|---|---|---|---|---|
| 5 | Adjustment of A/C head height | Oscilloscope (10:1)<br>Alignment tape MBAE-3 | TEST mode<br>69 00 00<br>PLAY | TP3 (CH1)<br>[ANA AUDIO]<br>TP4 (CH2)<br>[ANA AUDIO]<br>Nut B<br>Same amplitude | 8) Adjust the nut B to same amplitude of both CH1 and CH2 waveforms. (Refer to Fig. 2-8-14.)<br>9) Enter the set into the TEST mode. |
| 6 | Tracking preset | Alignment tape MSHP-X for PV pattern alignment | TEST mode<br>68 00 00 | | 10) Press the MENU or SET button so that the counter display shows "68 00 00".<br>11) Insert the alignment tape MSHP-X for PV pattern alignment.<br>12) Set the TRACKING control at the center click position.<br>13) Confirm that "68 End" is appearing on the counter display. |

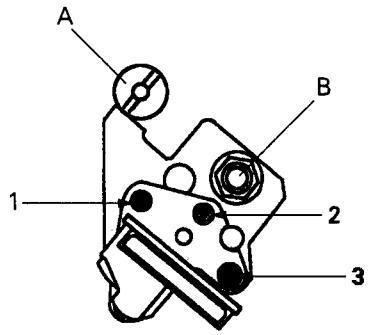


**Fig. 2-8-13**

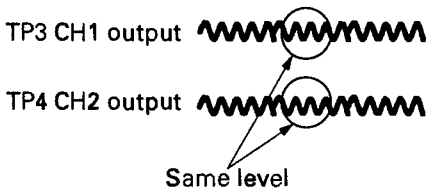


**Fig. 2-8-14**

| No. | Item | Reference picture/drawing | Procedure |
|---|---|---|---|

## 2.9 ADJUSTMENT OF TAPE TRANSPORT SYSTEM

**Noto:** The tape transport system generally do not need to be adjustment. Because it was precisely adjusted at the factory before shipment. However, it needs check and adjustment, if set is used for a considerably long time or some part of the tape transport system are replaced.

### 2.9.1 Check of tepe treneport eystem

1 Check

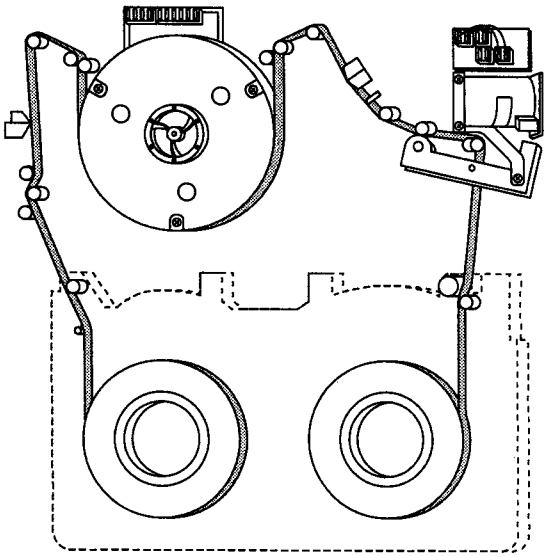

Fig. 2-9-1

**Note:**
**Use a soms signel recorded tepe (DS-104) for this check.**

1) Perform the following check with the tape beginning and tape end portions.
2) While repeating loading and unloading operations alternately several times, check to see if the tape is not damaged by the supply and take-up guide rollers and take-up guide arm roller.
3) Check that the tape is not damaged or wrinkled in the PLAY, FWD (SEARCH) and REV (SEARCH) operations.
4) If the tape is wrinkled or damaged by some roller, adjust the height of the roller.

| Symbol | Part Name | Tape regulation |
|---|---|---|
| A | Supply roller 1 | Non-regulation |
| B | Tension pole | Non-regulation |
| C | Supply roller 2 | Lower edge regulation |
| D | Full erase head | Non-regulation |
| E | Supply tape scraper | Non-regulation |
| F | Supply guide roller | Upper edge regulation |
| G | Supply slant pole | Non-regulation |
| H | Supply impedance roller | Non-regulation |
| J | Drum assembly | Lower edge regulation |
| K | Take-up impedance roller | Non-regulation |
| L | Take-up slant pole | Non-regulation |
| M | Take-up guide roller | Upper edge regulation |
| N | A/C head | Non-regulation |
| P | Take-up tape scraper | Non-regulation |
| Q | Take-up roller | Lower edge regulation |
| R | Capstan | Non-regulation |
| S | Guide arm roller | Upper edge regulation |

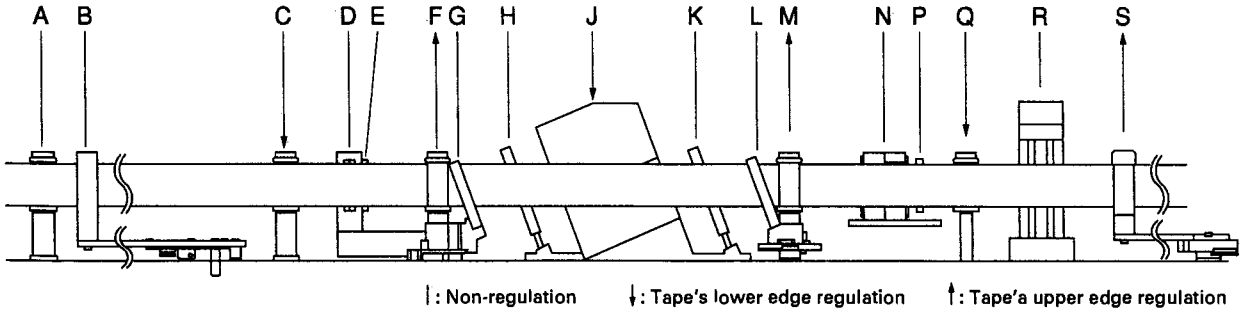


Fig. 2-9-2

| No. | Item | Reference picture/drawing | Procedure |
|---|---|---|---|

**2.9.2 Adjustment of tepe trevel in seerch mode (with tepe end)**

**Noto:** Use the end portion of recorded tape (DIGITAL S Tape).

| | | | |
|---|---|---|---|
| 1 | Take-up guide arm roller height adjustment (1) | 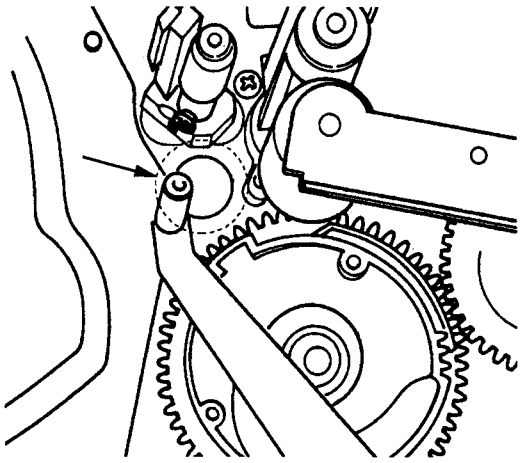 **Fig. 2-9-3** 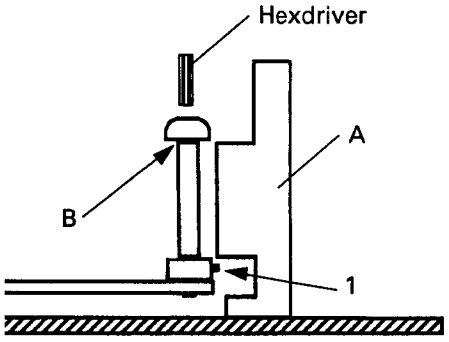  **Fig. 2-9-4** | **Note:** **This adjustment should be performed after the take-up guide arm roller assembly is installed.**<br>1) Enter the set into the TEST mode.<br>2) Press the MENU or SET button to show "66 00 00" on the counter display.<br>3) Press the COUNTER RESET button.<br>4) Turn the JOG dial in the FWD direction to set the mechanism in the loading position shown in Fig. 2-9-3.<br>5) Set the height gauge A on the cut plane of the main deck shown in Fig. 2-9-3.<br>6) Check the height of the (B in Fig. 2-9-4) take-up guide arm roller's upper flange.<br>7) If there is a difference between the actual height of the lower surface and the jig, loosen the set-screw 1 and adjust the height of the take-up guide arm roller with an hexdriver. (Reference height: 28.35 mm)<br>8) After removing the height adjustment jig, turn the JOG dial in the REV direction to set the mechanism in the unloading end position.<br>9) Press the SELECT button to show "66 End " on the counter display.<br>10) The TEST mode is quitted.<br>11) Turn the power switch to "OFF" then "ON", and insert a some signal recorded tape (DS-104) to play the end portion.<br>12) Precisely adjust the height of the take-up guide arm roller so that tape wrinkle/twist is minimized between the take-up guide roller - capstan - take-up guide arm roller in both the SEARCH REV and SEARCH FWD modes that are alternately switched to each other in this adjustment. For this adjustment, be aware that the height adjustment range is limited to within ±1/2 turn from the reference height.<br>13) Moreover, pay careful attention to the following matters.<br>a) When the tape transport mode is changed from the SEARCH FWD to SEARCH REV, in particular, tape is momentarily twisted or wrinkled a little for the reason of change in tape regulation. Therefore, adjust the height of parts concerned to minimize such twist or wrinkle in tape.<br>b) If the tape is regulated by either of upper and lower edges at the flange of the take-up guide arm roller or is wrinkled between the capstan and take-up guide arm roller, it results in tape damage. Therefore, adjust the height of those parts to minimize such wrinkle in the tape.<br>c) If wrinkle or twist in tape increases as a result of the above adjustment a) and/or b), fine adjust the height of the take-up guide roller so as to lower it minutely. This height adjustment is allowed in the range of 1/4 turn for raising or 1/2 turn for lowering from the reference height. |

| No. | Item | Reference picture/drawing | Procedure |
|---|---|---|---|
| 2 | Supply roller 1 height adjustment (1) | 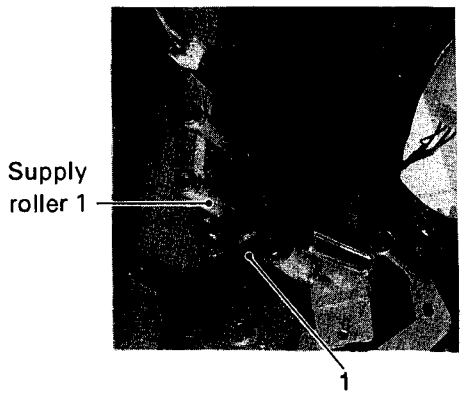 Fig. 2-9-5 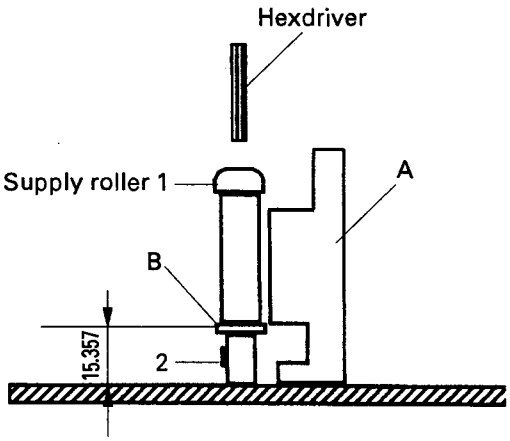 Fig. 2-9-6 | **Note:** **This adjustment should be performed after ths supply roller 1 is repisced.**<br>1) Remove the screw 1. (Refer to Fig. 2-9-5.)<br>2) Set the height gauge in the vacant screw hole for the screw 1.<br>3) Check the height of the (B in Fig. 2-9-6) supply roller 1's lower flange.<br>4) If there is a difference between the actual height of the lower flange and the jig, loosen the set-screw 2 and adjust the height of the supply roller 1 with an hexdriver. (Reference height: 15.375 mm or lower)<br>5) After removing the height adjustment jig, again screw the screw 1. (Fig. 2-9-5)<br>6) Turn on the power switch and insert a recorded tape (DS-104) to play the end portion.<br>7) Check to see if the tape is wrinkled or damaged by the flange of the supply roller 1 in both the SEARCH REV and SEARCH FWD modes and when the mode is switched from the SEARCH REV to SEARCH FWD. (Adjust to see that the lower end of the tape is lightly in touch with the lower flange. If when the tension pole shifts position it barely touches the flange, this is considered acceptable.)<br>8) If the tape is still wrinkled or damaged, fine adjust the height of the supply roller 1. (The maximum height of the upper surface of the lower flange is limited to 15.375 mm or lower.) |

| No. | Item | Reference picture/drawing | Procedure |
|---|---|---|---|
| 3 | Supply roller 2 height adjustment (1) | **Fig. 2-9-7** 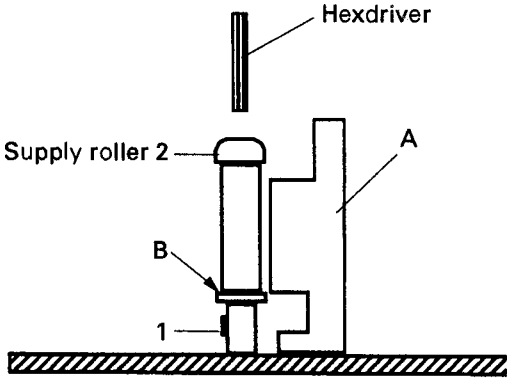  **Fig. 2-9-8** | **Note:** **This adjustment should be performed after the supply roller 2 is replaced.**<br>1) Move the full erase head and the cut plane of the main deck will be exposed.<br>2) Set the height guage A on the cut plane of the main deck shown in Fig. 2-9-7.<br>3) Check the height of the (B in Fig. 2-9-8) supply roller 2's lower flange.<br>4) If there is a difference between the actual height of the upper flange and the jig, loosen the set-screw 1 and adjust the height of the supply roller 2 with an hexdriver. (Reference height: 15.55 mm)<br>6) Remove the height adjustment jig.<br>6) Turn on the power switch and insert a some signal recorded tape (DS-104) to play the end portion.<br>7) Check to see if the tape is wrinkled or damaged by the flange of the supply roller 2 in both the SEARCH REV and SEARCH FWD modes and when the mode is switched from the SEARCH REV to SEARCH FWD.<br>8) If the tape is still wrinkled or damaged, fine adjust the height of the supply roller 2. At that time, be aware that the height adjustment is allowed within +1.5 or –0.5 turn from the reference height. |

| No. | Item | Reference picture/drawing | Procedure |
|---|---|---|---|

### 2.9.3 Adjustment of tepe trevel in seerch mode (with tepe beginning)

**Notes:** • Use the beginning portion of some signal recorded tape (DS-104).
• This adjustment must follow "2.9.2 Adjustment of tape travel in search mode (with tape end)".

| | | | |
|---|---|---|---|
| 1 | Take-up guide arm roller height adjustment (2) | | 1) Turn on the power switch and insert a some signal recorded tape (DS-104) to play the beginning portion.<br>2) Check to see if the degree of tape wrinkle/twist between the take-up guide roller - capstan - take-up guide arm roller when the tape travel mode is switched from the SEARCH FWD to SEARCH REV and vice versa is the same as in the take-up guide arm roller height adjustment (1).<br>3) If the tape is much more twisted/wrinkled, fine adjust the height of the take-up guide roller to minimize twist/wrinkle in the tape. This height adjustment is allowed within ±1/2 turn from the reference height.<br>4) For completing this adjustment, pay careful attention to the following matters.<br>a) When the tape transport mode is changed from the SEARCH FWD to SEARCH REV, in particular, tape is a little twisted or wrinkled momentarily for the reason of change in tape regulation. Therefore, adjust the height of parts concerned to minimize such twist or wrinkle in the tape.<br>b) If the tape is regulated by either of upper and lower edges at the flange of the take-up guide arm roller or is wrinkled between the capstan and take-up guide arm roller, it results in tape damage. Therefore, adjust the height of those parts to minimize such wrinkle in the tape.<br>c) If wrinkle or twist in tape increases as a result of the above adjustment a) and/or b), fine adjust the height of the take-up guide roller so as to lower it minutely. This height adjustment is allowed in the range of 1/4 turn for raising or 1/2 turn for lowering from the reference height. |

| No. | Item | Reference picture/drawing | Procedure |
|---|---|---|---|
| 2 | Supply roller 1 height adjustment (2) | | 1) Turn on the power switch and insert a some signal recorded tape (DIGITAL S Tape) to play the beginning portion.<br>2) Check to see if the tape is wrinkled or damaged by the flange of the supply roller 1 in both the SEARCH REV and SEARCH FWD modes and when the mode is switched from the SEARCH REV to SEARCH FWD. (Adjust to see that the lower end of the tape is lightly in touch with the lower flange. If when the tension pole shifts position it barely touches the flange, this is considered acceptable.)<br>3) If the tape is still wrinkled or damaged, fine adjust the height of the supply roller 1. (The maximum height of the upper surface of the lower flange is limited to 15.375 mm or lower.) |
| 3 | Supply roller 2 height adjustment (2) | | 1) Turn on the power switch and insert a some signal recorded tape (DIGITAL S Tape) to play the beginning portion.<br>2) Check to see if the tape is wrinkled or damaged by the flange of the supply roller 2 in both the SEARCH REV and SEARCH FWD modes and when the mode is switched from the SEARCH REV to SEARCH FWD.<br>3) If the tape is still wrinkled or damaged, fine adjust the height of the supply roller 2. At that time, be aware that the height adjustment is allowed within +1.5 or –0.5 turn from the reference height. |

| No. | Item | Reference picture/drawing | Procedure |
|---|---|---|---|

### 2.9.4 Adjustment ef teke-up reller

| | | | |
|---|---|---|---|
| 1 | Check and adjustment | 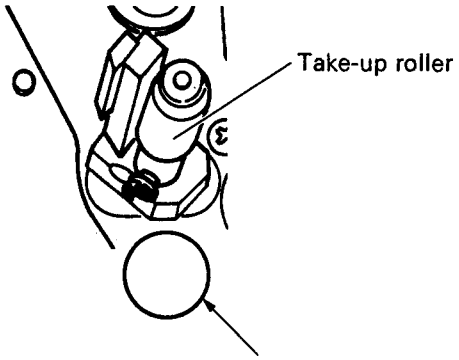 Fig. 2-9-9 | 1) Set the height gauge A on the cut plane of the main deck as shown in Fig. 2-9-9. |
| | | 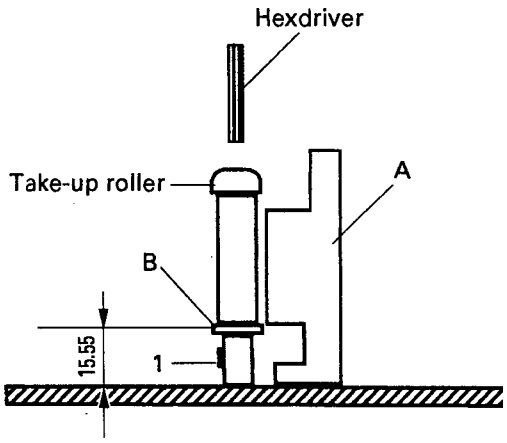 Fig. 2-9-10 | 2) Check the height of the (B in Fig. 2-9-10) take-up roller's lower flange.<br>3) If there is difference between the actual height and the reference height of the jig, loosen the set screw 1 and adjust the height of the take-up roller with an hexdriver. (Reference height: 15.55 mm)<br>4) Remove the height adjustment jig. |
| 2 | Fine adjustment | | 5) Turn on the power switch and insert a some signal recorded tape (DIGITAL S Tape).<br>6) While playing the tape, check that the tape smoothly travels on the upper surface of the lower flange of the take-up roller.<br>7) If there is something wrong, adjust the height of the take-up roller.<br>8) If height adjustment of the take-up roller cannot remove twist/wrinkle in the tape in the SEARCH FWD and SEARCH REV modes, fine adjust the height of parts concerned according to the preceding sections 2.9.2 and 2.9.3.<br>If adjustments of those sections are repeated, it needs to perform "2.8.2 Adjustment of X-value" and "2.8.3 Adjustment of head azimuth" once again for checking the normality of the mechanism. |

| No. | Item | Measuring instruments & Input signals | Mode | Measuring point ( ◎ ) Adjustment parts ( ⓣ ) Adjustment level ( ☆ ) | Adjustment procedure |
|---|---|---|---|---|---|

## 2.10 ADJUSTMENT OF INTERCHANGEABILITY

**Notes:**
- When the drum assembly or A/C head assembly is disassembled or replaced, they needs to adjust the interchangeability.
- Set the AUTO TRACKING to OFF position.
- Prior to this adjustment, check and adjust the tracking preset (refer to 2.8.3, item 6) without fail.

| | | | | | |
|---|---|---|---|---|---|
| 1 | Preparation | • Oscilloscope (10:1), Ext. trigger: TP10 [RF PRO2]<br>• PV pattern alignment tape MSHP | PLAY | ◎ TP23 [REC ITI ] (BR-D80/D85)<br>◎ TP1 [RF PRO2] (BR-D50)<br>ⓣ Screw 1 (Fig. 2-10-1)<br>☆ Max. RF envelope | 1) Play the PV pattern alignment tape MSHP.<br>2) Set the TRACKING control on the front panel at the center click position.<br>3) Turn the taper nut A to adjust the A/C head position so that maximum amplitude of the waveform can be obtained at the measuring point. (Refer to Fig. 2-10-2, in this step.)<br>**Note:**<br>**If adjustment of the guide roller (supply and take-up) cannot flatten the RF waveform, it needs to replace the drum assembly (refer to 2.3.2).**<br>4) If the waveform is observed like (a) in Fig. 2-10-3, adjust the supply guide roller. On the other hand, if the waveform is observed like (b) in Fig. 2-10-3, adjust the take-up guide roller. |

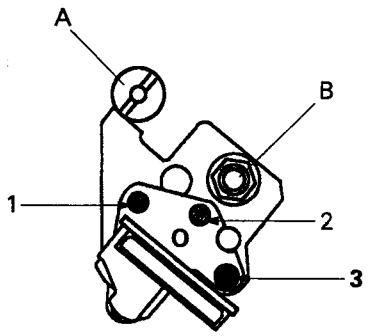


**Fig. 2-10-1**

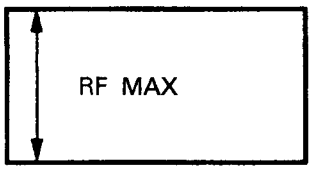


GOOD

**Fig. 2-10-2**

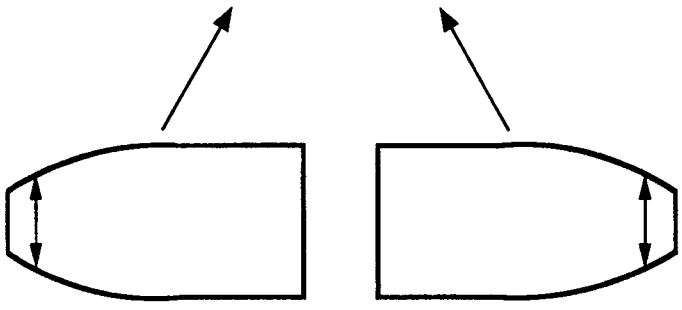

(a) Wrong (b) Wrong

**Fig. 2-10-3**

| No. | Item | Measuring instruments & Input signals | Mode | Measuring point ( ◎ )<br>Adjustment parts ( ⓣ )<br>Adjustment level ( ☆ ) | Adjustment procedure |
|---|---|---|---|---|---|
| 2 | Adjustment of supply guide roller | • Oscilloscope (10:1), Ext. trigger: TP10 [RF PRO2]<br>• PV pattern alignment tape MSHP | PLAY | ◎ TP23 [REC ITI] (BR-D80/D85)<br>◎ TP1 [RF PRO2] (BR-D50)<br>ⓣ Supply guide roller<br>☆ Flat frequency resporse | 1) Loosen the L.H. screw 2. (Refer to Fig. 2-10-4.)<br>2) Play the PV pattern alignment tape MSHP.<br>3) Observe waveform at the measuring point through the oscilloscope.<br>4) Set an Allen (hexagon headed) screwdriver in "A" of the guide roller and turn it counterclockwise once. (Fig. 2-10-4).<br>5) After confirming that the waveform is observed like (a) in Fig. 2-10-5, turn the Allen screwdriver gradually clockwise.<br>6) If the waveform is flat with maximum amplitude (refer to Fig. 2-10-5(b)), proceed to the next step 7). If the amplitude is maximum but the waveform is like (a) in Fig. 2-10-5, it needs to replace the drum assembly. If the waveform is observed like (c) in Fig. 2-10-5, adjust the take-up guide roller.<br>7) Fine adjust the height of the supply guide roller so that the waveform keeps flat when chaning the amplitude by turning the TRACKING control. |

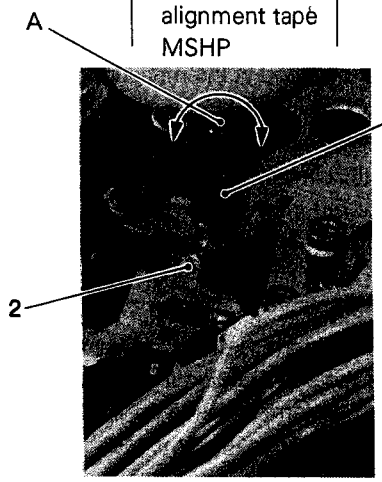


Fig. 2-10-4

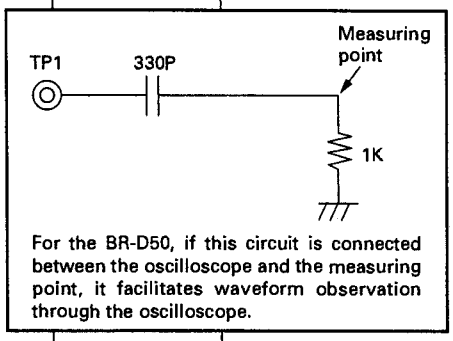


For the BR-D50, if this circuit is connected between the oscilloscope and the measuring point, it facilitates waveform observation through the oscilloscope.

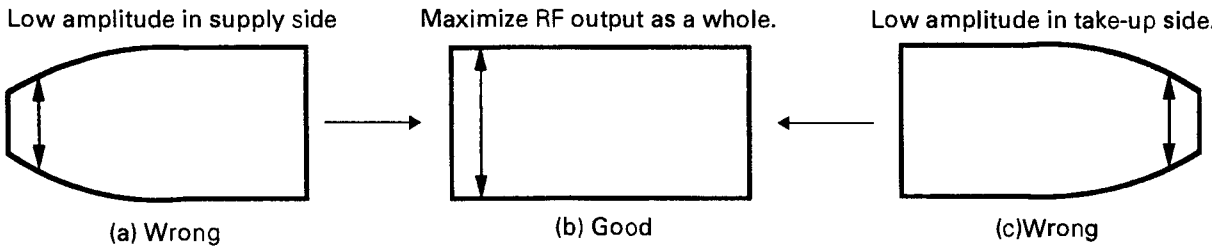


Fig. 2-10-5

| No. | Item | Measuring instruments & Input signals | Mode | Measuring point ( ◎ )<br>Adjustment parts ( ⓣ )<br>Adjustment level ( ☆ ) | Adjustment procedure |
|---|---|---|---|---|---|
| 3 | Adjustment of take-up guide roller | • Oscilloscope (10:1), Ext. trigger: TP10 [RF PRO2]<br>• PV pattern alignment tape MSHP | PLAY | ◎ TP23 [REC IT] (BR-D80/D85)<br>◎ TP1 [RF PRO2] (BR-D50)<br>ⓣ Take-up guide roller<br>☆ Flat frequency resporse | 1) Loosen the L.H. screw 3. (Refer to Fig. 2-10-6.)<br>2) Play the PV pattern alignment tape MSHP.<br>3) Observe waveform at the measuring point through the oscilloscope.<br>4) Set an Allen (hexagon headed) screwdriver in "A" of the guide roller and turn it counterclockwise once. (Fig. 2-10-6).<br>5) After confirming that the waveform is observed like (a) in Fig. 2-10-7, turn the Allen screwdriver gradually clockwise.<br>6) If the waveform is flat with maximum amplitude (refer to Fig. 2-10-7(b)), proceed to the next step 7). If the amplitude is maximum but the waveform is like (a) in Fig. 2-10-7, it needs to replace the drum assembly. If the waveform is observed like (c) in Fig. 2-10-7, adjust the supply guide roller.<br>7) Fine adjust the height of the supply guide roller so that the waveform keeps flat when chaning the amplitude by turning the TRACKING control.<br>8) For checking the linearity, use the software exclusive for this purpose. If the linearity is still out of the specification in spite of the above adjustment, make a fresh start of the linearity adjustment. |

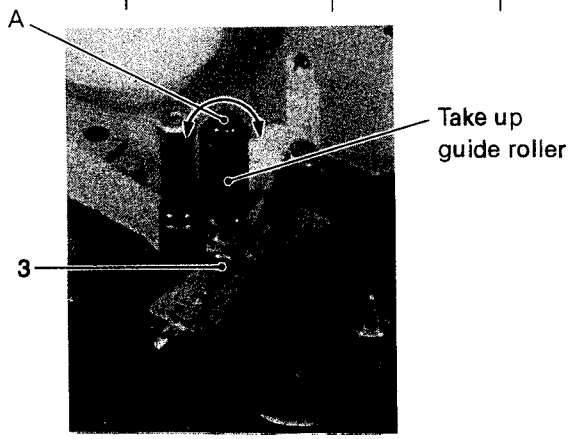


**Fig. 2-10-6**

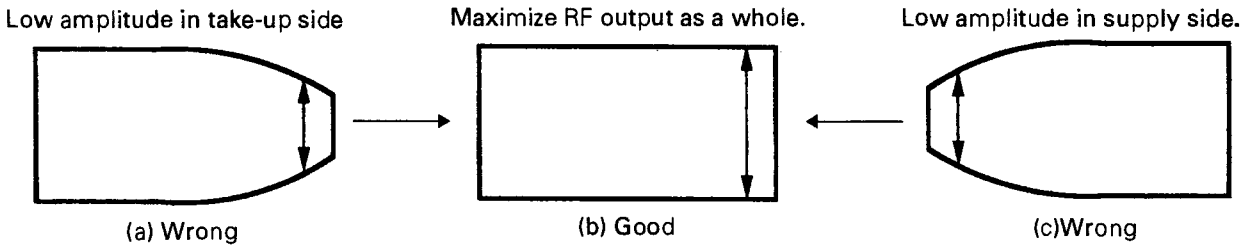


**Fig. 2-10-7**

# SECTION 3

# ELECTRICAL ADJUSTMENT

No.9337-SEC3

# CONTENTS


3.1 PRECAUTIONS ..... 3-1
3.1.1 Tools, test instruments necessary for adjustment ..... 3-1
3.1.2 Setting mode of the VCR for electrical adjustment ..... 3-1
3.1.3 Setting switch of the VCR for electrical adjustment ..... 3-1
3.1.4 Signals required for adjusting video system ..... 3-1
3.1.5 Location of main P.C. boards ..... 3-2
3.1.6 How to setting the TEST MODE ..... 3-2
3.2 ADJUSTMENT OF SERVO CIRCUIT ..... 3-2
3.3 ADJUSTMENT OF RF PROCESS CIRCUIT ..... 3-3
3.4 ADJUSTMENT OF REC/ITI CIRCUIT ..... 3-5
3.5 ADJUSTMENT OF OUT MEN CIRCUIT ..... 3-5
3.5 ADJUSTMENT OF OUT/GEN CIRCUIT ..... 3-6
3.7 ADJUSTMENT OF OUT ENC CIRCUIT ..... 3-9
3.8 ADJUSTMENT OF SYS/TC CIRCUIT ..... 3-11
3.9 ADJUSTMENT OF ANA IN CIRCUIT ..... 3-12
3.10 ADJUSTMENT OF AUDIO CIRCUIT ..... 3-16
3.11 ADJUSTMENT OF TRACKING METER ..... 3-17

# SECTION 3
# ELECTRICAL ADJUSTMENT

## 3.1 PRECAUTIONS

Before proceeding to any electrical adjustment, it is required to confirm without fail that the objective item (function or part) is out of order. Moreover, for the item that needs exact mechanical adjustment prior to electrical adjustment, make sure that it is mechanically normal first and then proceed to electrical adjustment.
Start electrical adjustment at least 10 minutes after the VTR has been turned on.
Regarding an oscilloscope to be used for measurement, use the 10:1 probe.

### 3.1.1 Tools, test instruments necessary for adjustment

(1) Test instruments

- Oscilloscope (dual-trace type for 300 MHz or higher frequency, used for 3.3.3 FILTER input level adjustment and dual-trace type for 100 MHz or higher frequency)
- Composite and Y/C video signal generator (TEKTRONIX TSG130A or equivalent)
- Component signal generator (TEKTRONIX TSG131A or equivalent)
- Vectorscope (TEKTRONIX 521A or equivalent)
- Frequency counter (sensitivity for 10 MHz or higher and 100 mV or lower)
- Digital voltmeter (capable of indicating 1 mV DC at lowest)
- Video monitor
- Audio tester

(2) Tools

- Extension board, Large (KLJ0054)
- Extension board, Small (KLJ0055)
- Digital-S cassette tape (DS-104)

### 3.1.2 Setting mode of the VCR for electrical adjustment

1. Component signal
   Set to "TYPE M2" for component signal without exception. (Select "LOW" for MENU No. 104 "COMPONENT OUT LEVEL".)
2. Test mode 100 % marker signal
   Set TEST mode to No. 78 "LEVEL MARK 1".
3. Black burst signal
   Set TEST mode to No. 7E "BB OUT & MARK 1".
4. Built-in color-bar signal
   Select "INTERNAL COLOR BAR" for MENU No. 111 "REC SIGNAL SELECT".

### 3.1.3 Setting switch of the VCR for electrical adjustment

1. TBC REMOTE terminal:
   OPEN
2. DIP switch S1 on OUT ENC board:
   Set all segmental switches to "ADJ" position for adjusting video system.
3. When video signal input selecting as shown below.
   - Componet input
     VIDEO INPUT switch : Y/C (CPN)
     Menu switch No.109 VIDEO INPUT : CPN (1)
   - Y/C input
     VIDEO INPUT switch : Y/C (CPN)
     Menu switch No.109 VIDEO INPUT : Y/C (0)
   - LINE input
     VIDEO INPUT switch : LINE
4. All other switches:
   Original position as they were set on shipment
   - Front panel
     REMOTE : LOCAL
     COUNTER : CTL
     AUDIO MONITOR : MIX
     AUDIO INPUT : DIG
     VIDEO INPUT : DIG
   - Rear panel
     AUDIO LEVEL : +4dB

**• Specifications of alignment tape**

MSHP-X

| Video signal | Audio signal | Time | Application |
|---|---|---|---|
| Color bar | — | 50 min | For adjustment of tracking preset |

MSHV-1

| Video signal | Audio signal | Time | Application |
|---|---|---|---|
| Moving picture | Music sound | 50 min | • For check and adjustment of RF process circuit<br>• Search audio is recored |

MS-2

| Video signal | | Audio signal | Time | Application |
|---|---|---|---|---|
| 1 | Moving picture | Music sound | 15 min | • For check and adjustment of video system PB circuit<br>• For check and adjustment of audio PB circuit<br>• Serch audio is recorded |
| 2 | Color bar | 1kHz/-20dBFs | 10 min | |
| 3 | Pulse & bar | | 5 min | |
| 4 | Multiburst | | 5 min | |
| 5 | Bowtie | | 5 min | |

MSHP

| Video signal | Audio signal | Time | Application |
|---|---|---|---|
| Sine wave | — | 50 min | For adjustment of linearity |



### 3.1.4 Signals required for adjusting video system

**Note:** All color levels appearing in this section are those to be measured with the following color-bar signals. If other signals such as signal of 75 % color level, signal of different setup level, etc. are used, it not only brings measured value different from the specification but also causes maladjustment.

1. Y/C and composite color-bar signals (color level 100 %, setup 0% )

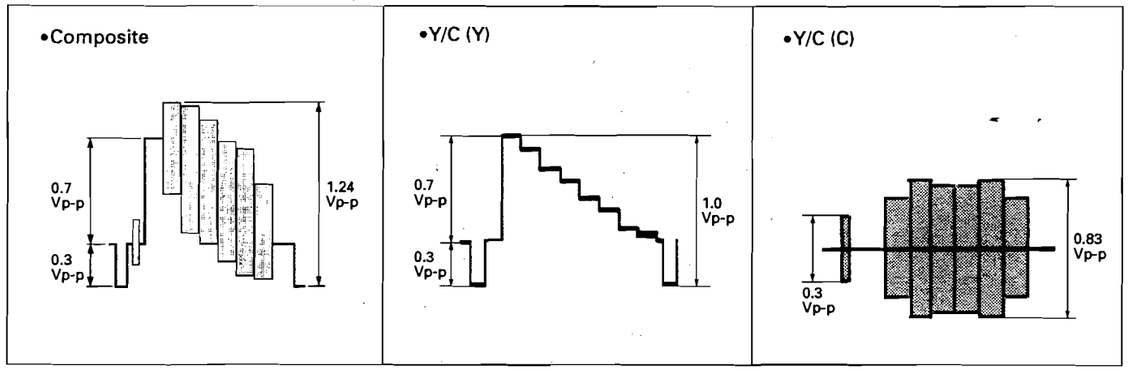


2. Component color-bar signal (color level 100 %, setup 0% )

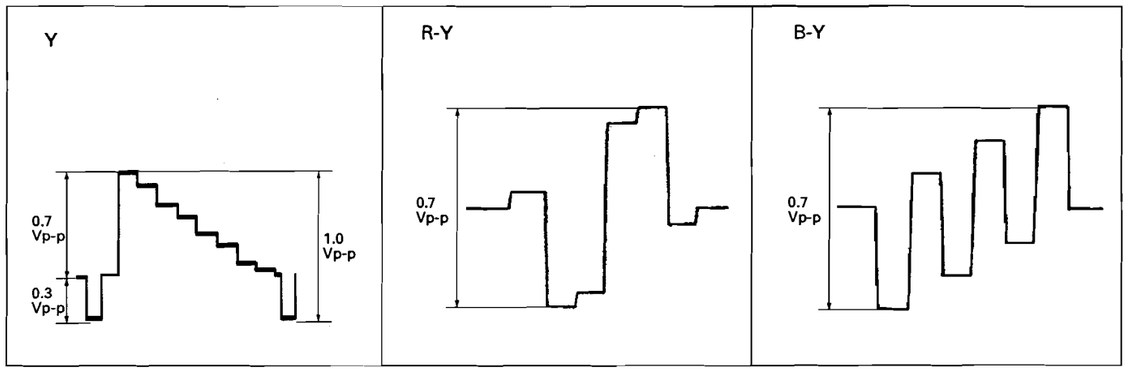


3. Component bowtie signal

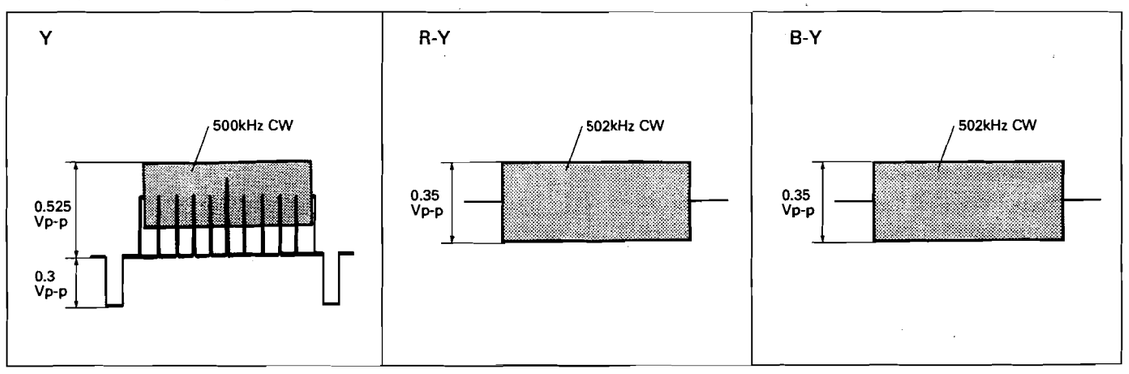

### 3.1.5 Location of main P.C. boards

If this page is left folded out through electrical adjustment, it facilitates adjustment work.

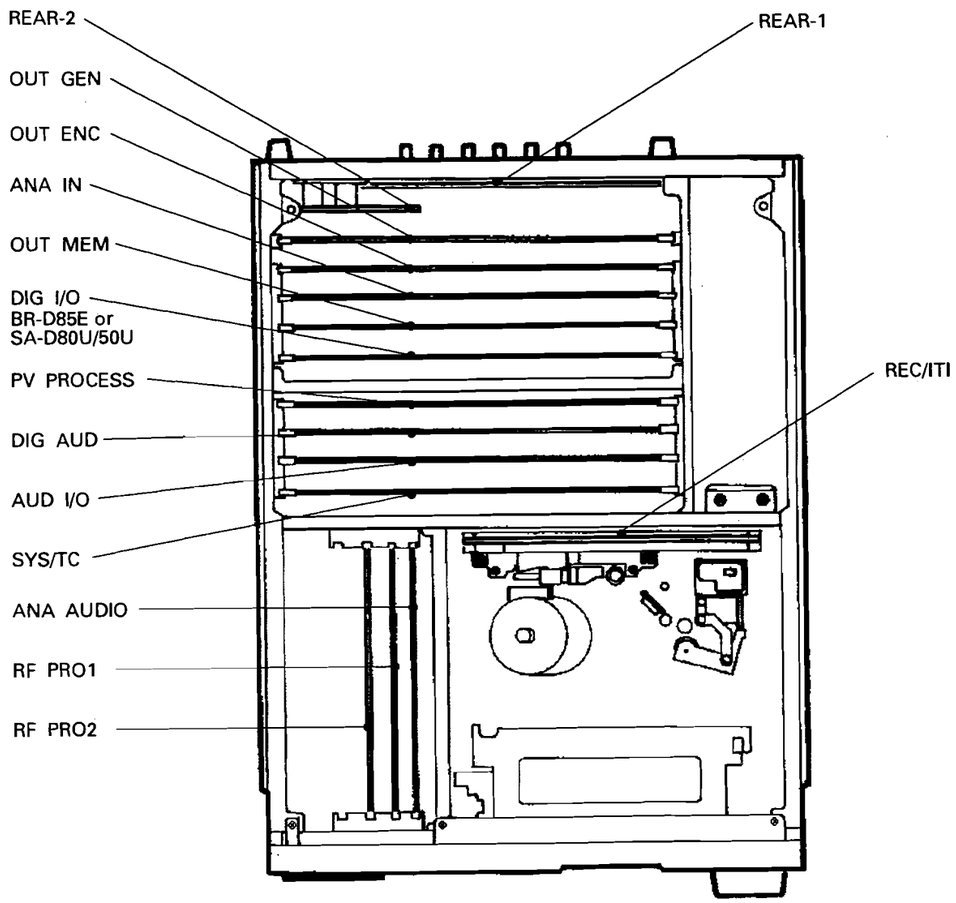


**WARNING**

**When mounting each board, pay careful attention to its mounting place, particularly to the mounting place of the PV PROCESS board. If the PV PROCESS board is mounted in a wrong place or any board other than the PV PROCESS board is mounted in the place specified for the PV PROCESS board, the wrong mounted board may possibly be damaged.**

### 3.1.6 How to setting the TEST MODE

(1) Eject the cassette tape, and turn the power off.
(2) Turn the power on, and press the [COUNTER RESET], [FF] and [REW] buttons simultaneously within 2 seconds after the counter display comes up.
(3) On-screen display and counter display will be changed over the test mode.
(4) With the [MENU] (UP) and the [SET] (DOWN) buttons, access the mode to be desired to change on the display.
(5) Paform the mode with the [COUNTER RESET] button.

Details of the TEST MODE, refer to the "1.9 TEST MODE".



| No. | Item | Measuring instruments & Input signals | Mode | Measuring point (◎) Adjustment parts(ⓣ) Adjustment level (☆) | Adjustment procedure |
|---|---|---|---|---|---|
| **3.2 ADJUSTMENT OF SERVO CIRCUIT** | | | | | |
| 1 | Motor FG duty adjustment | — | • Test mode [5d] REEL CAP FG (A) | ◎ Counter display ⓣ [COUNTER RESET] button | 1) Set to TEST mode No. 5d.<br>2) Press the [COUNTER RESET] button.<br>3) The reel motor, capstan motor and drum motor starts one after another in this order.<br>4) With a message "END" appearing on the counter display, automatic adjustment is completed. |
| 2 | Tracking VR preset adjustment | — | • Test mode [85] TR VR PRESET (A) | ◎ Counter display ⓣ TRACKING VR ⓣ [COUNTER RESET] button | 1) Set to TEST mode No. 85.<br>2) Set the TRACKING VR to the center click position.<br>3) Press the [COUNTER RESET] button.<br>4) With a message "END" appearing on the counter display, automatic adjustment is completed. |
| 3 | Tracking preset adjustment | • Alignment tape MSHP-X | • Test mode [68] TRACKING (A)<br>• Menu switch No. 005 AUTO TRACKING: ON<br>• PB | ◎ Counter display ⓣ [COUNTER RESET] button | **Note:** This adjustment must be performed after the X-value adjustment is completed.<br>1) Set to TEST mode No. 68.<br>2) Play the alignment tape MSHP-X.<br>3) Press the [COUNTER RESET] button.<br>4) With a message "END" appearing on the counter display, automatic adjustment is completed. |
| 4 | PB switching point adjustment | • Alignment tape MSHV-1 | • Test mode [64] SW POINT (M)<br>• Menu switch No. 005 AUTO TRACKING: ON<br>• PB | ◎ Counter display ⓣ [COUNTER RESET] button | 1) Set to TEST mode No. 64.<br>2) Play the alignment tape MSHV-1.<br>3) The SERVO LOCK LED goes on and then, press the [COUNTER RESET] button.<br>4) With a message "END" appearing on the counter display, automatic adjustment is completed. |

3-2

| No. | Item | Measuring instruments & Input signals | Mode | Measuring point ( ◎ )<br>Adjustment parts ( ⓣ )<br>Adjustment level ( ☆ ) | Adjustment procedure |
|---|---|---|---|---|---|

### 3.3 ADJUSTMENT OF RF PROCESS CIRCUIT

**Note:**
- **This adjustment must be performed for both the RF PROCESS board 1 and 2 alternately.**
- **Step 8) "Linearity check" of "2.10.1. 3 Adjustment of take-up guide roller" and "3.4.2 ITI output level adjustment" should be completed before this adjustments.**
- **Set the Menu switch No. 005 AUTO TRACKING to OFF. When play back the alignment tape while adjusting the TRACKING VR to maximize output level.**

| | | | | | |
|---|---|---|---|---|---|
| 1 | Threshold level adjustment | • Digital voltmeter | • EE (Recorder set)<br>• STOP (Player set) | ◎TP16 : 2E<br>◎TP17 : 2E<br>◎TP9 (TRIG) : 7B<br>ⓣVR9 : 3E<br>☆TP16 = TP17 (DC level) | 1) Measure the voltage of TP16 and TP17 using digital voltmeter.<br>2) Adjust VR9 to equalize DC levels (1.60 to 1.70 $V_{DC}$) at TP16 and TP17. |
| 2 | Channel difference adjustment for RF output | • Oscilloscope<br>• Alignment tape MSHV-1 | • PB | ◎TP1 : 11I<br>◎TP9 (TRIG) : 7B<br>ⓣVR1 : 12I (CH BAL)<br>☆CH1 = CH2 | 1) While switching the oscilloscope's slope between positive and negative, adjust VR1 to remove difference between the two channels. |
| 3 | FILTER input level adjustment | • Oscilloscope<br>• Alignment tape MSHV-1 | • PB | ◎TP1 : 11I<br>ⓣVR2 : 10F (FIL LEV)<br>☆0.4 Vp-p | **Note:** Use 300MHz oscilloscope foy this adjustment .<br>1) Adjust VR2 so that higher channel RF level becomes 0.4 Vp-p. |
| 4 | 1+D adjustment | • Oscilloscope<br>• Component color-bar signal | • TEST mode [6F]<br>RF CLK 1/2 (M)<br>• REC<br>↓<br>PB<br>(Recorder set) | ◎TP17 : 3E<br>◎TP9 (TRIG) : 11I<br>ⓣVR6, VC1 : 3G<br>☆Minimum | 1) Set to TEST mode No. 6F and press the [COUNTER RESET] button.<br>2) Enter the VTR into REC mode. (24.75 MHz signal will be recorded.)<br>3) Play back the recorded portion. Color-bar signal is not reproduced in this playback picture.<br>4) Adjust VR6 and VC1 alternately so that the level of 24.75 MHz (40 nsec) signal that is appeared mixed with noise signal is minimum.<br><br>**Note:** When the player set needs this adjustment, play back the recorded tape with the recorder set since it is equipped with no test mode [6F]. |
| 5 | Frequency response adjustment | • Oscilloscope<br>• Alignment tape MSHV-1 | • PB | ◎TP3 : 8I<br>◎TP9 (TRIG) : 7B<br>ⓣVR3, VR4 : 9I<br>☆0.7 $V_{DC}$ | 1) Adjust VR3 and VR4 alternately until the level at TP3 becomes 0.7 $V_{DC}$. |

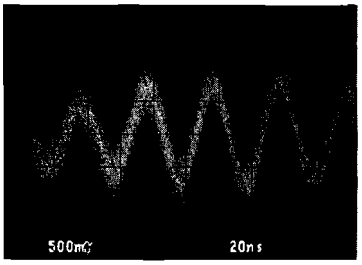

NG

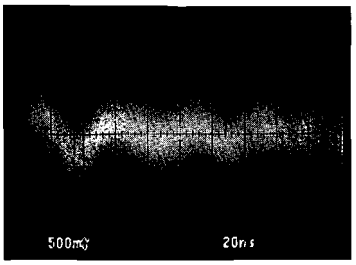

OK

| No. | Item | Measuring instruments & Input signals | Mode | Measuring point ( ◎ )<br>Adjustment parts ( ⓟ )<br>Adjustment level ( ☆ ) | Adjustment procedure |
|---|---|---|---|---|---|
| 6 | Error rate adjustment | • Frequency counter<br>• Alignment tape MSHV-1 | • PB | ◎TP38 : 13I<br>◎TP9 (TRIG) : 7B<br>ⓟVR7 : 41, VR8 : 31<br>VR11 : 4E<br>☆TP38 ≦ 300Hz | 1) Connect a frequency counter to TP38. Adjust VR7, VR8 and VR11 repeatedly until the frequency counter reads 300 Hz or lower. After this adjustment, again confirm the frequency response (preceding item No. 5).<br>2) In case of the player set, adjust this item more precisely with 1 kHz sine wave input to TP48. |
| 7 | PLL lock adjustment | • Digital voltmeter<br>• Alignment tape MSHV-1 | • PB | ◎TP22 : 2H<br>ⓟVR10 : 3I | 1) While turning VR10 gradually from the minimum position to turn voltage up, note the voltage when the green LED on the board goes on as "voltage **A**".<br>2) Next, while turning VR10 gradually from the maximum position to turn voltage down, note the voltage when the green LED on the board goes on as "voltage B".<br>3) Adjust VR10 to obtain an intermediate voltage between "voltage A" and "voltage B". |
| 8 | SEARCH/ STILL mode check | • LED on the board<br>• Alignment tape MSHV-1<br>• Alignment tape MS-2 moving picture | • SEARCH<br>STILL | — | 1) Play the alignment tape MSHV-1 and set the VTR to SEARCH mode.<br>2) Confirm that the green LED on the board is on. If the green LED is not turned on, repeat the preceding item No. 5 "Frequency response adjustment".<br>3) Next, enter the VTR into the STILL mode.<br>4) Confirm that the green LED on the board is still on. If the green LED is flickering on not turned on, repeat the preceding item No. 5 "Frequency response adjustment".<br>5) In the same manner as above steps 1) though 4) in MS-2 play back mode. |

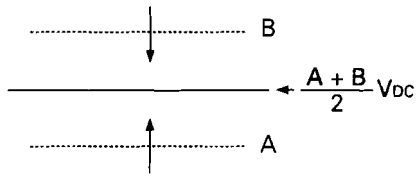


**Fig. 3-3-1**

| No. | Item | Measuring instruments & Input signals | Mode | Measuring point (◎)<br>Adjustment parts (ⓣ)<br>Adjustment level (☆) | Adjustment procedure |
|---|---|---|---|---|---|

### 3.4 ADJUSTMENT OF REC/ITI CIRCUIT

**Note: This adjustment applies to BR-D85 and BR-D80 only.**

| | | | | | |
|---|---|---|---|---|---|
| 1 | REC current adjustment | • Built-in color-bar or component color-bar signal | • TEST mode [72] RF REC C & F (A)<br>• REMOTE SW : 9 PIN<br>• Menu swith No. 005 AUTO TRACKING :ON | ◎Counter display<br>ⓣ[COUNTER RESET] button<br>☆Automatic adjustment | 1) Set to TEST mode No. 72.<br>2) Set the VTR to STOP mode with a Digital-S tape being inserted.<br>3) Press the [COUNTER RESET] button.<br>4) With a message "P****" appearing on the counter display, automatic adjustment starts inside the VTR.<br>**Note:** Don't touch any operation button during automatic adjustment. For discontinuing automatic adjustment forcibly, press the [COUNTER RESET] button.<br>5) With a message "END**" appearing on the counter display, automatic adjustment is complete.<br>6) If a message "ERR**" appears on the display, the VTR fails in automatic adjustment. In such an event, press the [COUNTER RESET] button again to try to make a fresh start of automatic adjustment. |
| 2 | ITI output level adjustment | • Alignment tape MSHP | • Menu swith No. 005 AUTO TRACKING : ON<br>• PB | ◎TP35 (RF PROCESS 1)<br>◎TP9 (TRIG.RF PROCESS 1)<br>ⓣVR8<br>☆1.3VDC | **Note:** This adjustment must be carried out prior to the Step 8) "Linearity check" of the section "2.10.1.3 Adjustment of take-up guide roller."<br>1) Adjust VR8 so that the DC level becomes 1.3 VDC. |

**NOTE:** • If the REMOTE switch is not set to the 9-PIN position, it brings this adjustment to an incorrect result.
• If adjustment of the RF PROCESS circuit is incomplete, it brings this adjustment to an incorrect result.

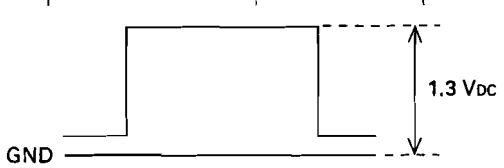


**Fig. 3-4-1**

### 3.5 ADJUSTMENT OF OUT MEN CIRCUIT

| | | | | | |
|---|---|---|---|---|---|
| 1 | Component/ composite color output level adjustment | • Oscilloscope<br>• TEST mode 100% marker<br>• Alignment tape MSHV-1 | • TEST mode [78] LEVEL MARK1 (M)<br>• PB | ◎TP2 : 17B<br>◎TP4 : 17B<br>ⓣVR1 : 15E (C LEV)<br>☆TP4 = TP2 | 1) Connect oscilloscope's probes to TP2 and TP4.<br>2) While setting either channel of oscilloscope for inversional input, set the oscilloscope for ADD mode of 50 mV/div (even range) for both channels.<br>3) Set to TEST mode No. 78, and press the [COUNTER RESET] button.<br>4) Adjust VR1 to equalize the level of TP4 signal with that of TP2 signal (to make waveform flat).<br>• Setting of the oscilloscope<br>One channel inverted<br>ADD mode<br>20MHz filter ON |

Flatten waveform of TP2 – TP4.

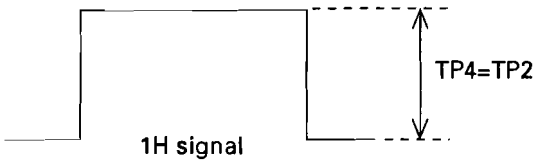


**Fig. 3-5-1**

| No. | Item | Measuring instruments & Input signals | Mode | Measuring point ( ◎ )<br>Adjustment parts ( ⓣ )<br>Adjustment level ( ☆ ) | Adjustment procedure |
|---|---|---|---|---|---|

### 3.6 ADJUSTMENT OF OUT/GEN CIRCUIT

**Note: The item No. 3 "Composite color level adjustment" and following items must be adjusted after completion of "3.7 ADJUSTMENT OF OUT ENC CIRCUIT".**

| | | | | | |
|---|---|---|---|---|---|
| 1 | Color error voltage adjustment | • Digital voltmeter<br>• Composite color-bar signal<br>↓<br>REF IN | • STOP | ◎ TP13 : 18J<br>◎ TP354 (GND) : 10J<br>ⓣ VR3 : 18J (CERR DC)<br>☆ 3.2 VDC | 1) Adjust VR3 to obtain 3.2 VDC at the measurement point. |
| 2 | INT H adjustment | • Vectorscope<br>• Composite color-bar signal<br>↓<br>REF IN of vectorscope<br>• Alignment tape MS-2 color bar | • PB | ◎ LINE-1 OUT<br>ⓣ VR301 : 9J (INT H) | 1) With input of the color-bar signal to vectorscope's REF IN, set the vectorscope reference to the reference input.<br>2) Make the VTR's REF IN terminal open.<br>3) Connect vectorscope to the LINE-1 OUT terminal.<br>4) Adjust VR301 so that turnaround frequency of vectorscope indication becomes minimum (less than 5 times per second). |
| 3 | Composite color level adjustment | • Vectorscope<br>• Alignment tape MS-2 color bar | • PB | ◎ LINE-1 OUT (with 75Ω terminator)<br>ⓣ VR608 : 8J (CPSC LEV)<br>☆ 0.3 Vp-p | 1) While inputting the composite color-bar signal directly to the vectorscope, adjust the GAIN control so that the spot of burst signal is positioned on the circumference scale on the vectorscope screen.<br>2) Connect vectorscope to the LINE-1 OUT terminal.<br>3) Play back the alignment tape MS-2 color bar, adjust VR608 so that the spot of burst signal is positioned on the circumference of the vectorscope screen (0.3 Vp-p). |

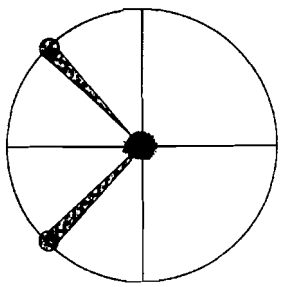

**Fig. 3-6-1**

| No. | Item | Measuring instruments & Input signals | Mode | Measuring point (◎)<br>Adjustment parts (ⓣ)<br>Adjustment level (☆) | Adjustment procedure |
|---|---|---|---|---|---|
| 4 | Component Y level adjustment | • Oscilloscope<br>• TEST mode 100% marker | • TEST mode [78] LEVEL MARK1 (M)<br>• STOP | ◎ COMPONENT Y OUT (with 75Ω terminator)<br>ⓣ VR607 : 6J (CPNY LEV)<br>☆ 0.7 Vp-p | 1) Set to TEST mode No. 78 and press the [COUNTER RESET] button.<br>2) Adjust VR607 so that the marker level becomes 0.7 Vp-p. |
| 5 | Y/C Y level adjustment | • Oscilloscope<br>• TEST mode 100% marker | • TEST mode [78] LEVEL MARK1 (M)<br>• STOP | ◎ Y/C Y OUT (with 75Ω terminator)<br>ⓣ VR606 : 6J (YC Y LEV)<br>☆ 0.7 Vp-p | 1) Activate TEST mode No. 78 and press the [COUNTER RESET] button.<br>2) Adjust VR606 so that the marker level becomes 0.7 Vp-p. |
| 6 | LINE Y level adjustment | • Oscilloscope<br>• Black burst signal | • TEST mode [7E] BBOUT & MARK 1 (M)<br>• STOP | ◎ LINE-1 OUT (with 75Ω terminator)<br>ⓣ VR605 : 5J (CPSY LEV)<br>☆ 0.7 Vp-p | 1) Set to TEST mode No. 7E and press the [COUNTER RESET] button.<br>2) Adjust VR605 so that the marker level becomes 0.7 Vp-p. |

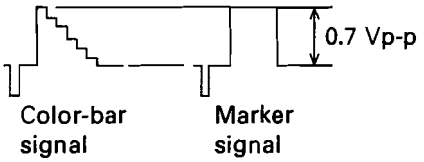


**Fig. 3-6-2**

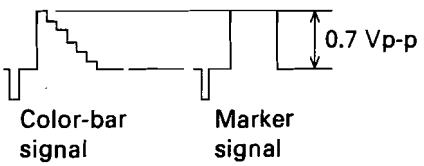


**Fig. 3-6-3**

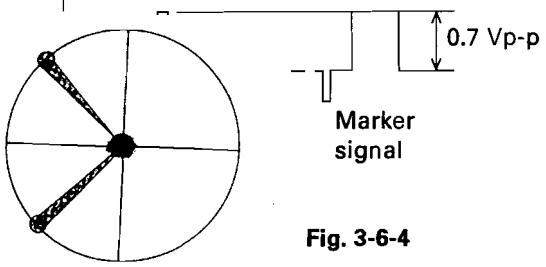


**Fig. 3-6-4**

| No. | Item | Measuring instruments & Input signals | Mode | Measuring point ( ◎ )<br>Adjustment parts ( ⓣ )<br>Adjustment level ( ☆ ) | Adjustment procedure |
|---|---|---|---|---|---|
| 7 | SYNC level adjustment | • Oscilloscope<br>• Alignment tape MS-2 color bar | • PB | ◎ COMPONENT Y OUT (with 75Ω terminator)<br>ⓣ VR302 : 9J (SY LEV)<br>☆ 0.3 Vp-p | 1) Adjust VR302 so that SYNC level becomes 0.3 Vp-p. |
| 8 | SYNC phase adjustment | • Oscilloscope<br>• Alignment tape MS-2 color bar | • TEST mode [7B] Y TIMING (M)<br>• PB | ◎ COMPONENT Y OUT<br>ⓣ S301 : 14J<br>☆ 10.13 µs | 1) Set S301 to "0" position.<br>2) Connect the oscilloscope to the COMPONENT Y OUT terminal.<br>3) Set to TEST mode No. 7B and press the [COUNTER RESET] button.<br>4) Play the alignment tape MS-2 color bar.<br>5) Turn the JOG dial to set the rise point of Y signal becomes 10.13 µs<br>6) Fine adjust the rise point of Y signal with S301.<br>7) After the above adjustment is completed, press the [SELECT] button to memorize the adjustment value. |
| 9 | SYSTEM phase adjustment | • Oscilloscope<br>• Alignment tape MS-2 color bar<br>• Composite color-bar signal<br>↓<br>REF IN | • PB | ◎ LIINE-1 OUT<br>ⓣ SYSTEM PHASE VR (Front sub-panel) | 1) Connect an oscilloscope to LINE-1 OUT and through-out of REF IN terminals and set the oscilloscope to CHOP mode.<br>2) Adjust the SYSTEM PHASE VR on the front sub-panel so that LINE-1 OUT and REF IN signals correspond to each other in the sync phase. |

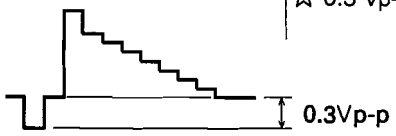


Fig. 3-6-5

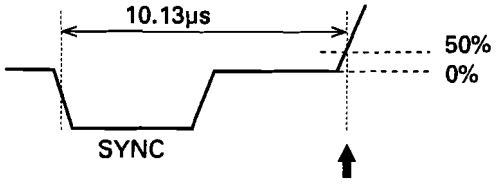


Fig. 3-6-6

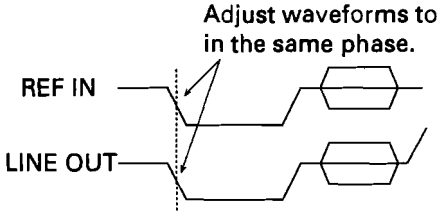


Fig. 3-6-7

| No. | Item | Measuring instruments & Input signals | Mode | Measuring point ( ◎ )<br>Adjustment parts ( ⓣ )<br>Adjustment level ( ☆ ) | Adjustment procedure |
|---|---|---|---|---|---|

### 3.7 ADJUSTMENT OF OUT ENC CIRCUIT

| | | | | | |
|---|---|---|---|---|---|
| 1 | Component Y signal frequency response adjustment | • Oscilloscope<br>• Alignment tape MS-2 multiburst | • PB | ◎ COMPONENT Y OUT (with 75Ω terminator)<br>ⓣ VC1 : 9J (Y FRQ)<br>☆ Same amplitude | 1) Adjust VC1 to equalize 4 MHz signal level with 500 kHz signal level. |
| 2 | Component signal output delay adjustment | • Oscilloscope<br>• Alignment tape MS-2 bowtie | • TEST mode [7C] CPN C TIMING (M)<br>• PB | ◎ R-Y OUT<br>◎ B-Y OUT<br>◎ COMPONENT Y OUT<br>ⓣ VR5 : 6J (CPNR DL)<br>ⓣ VR8 : 8J (CPNB DL) | 1) Set to TEST mode No. 7C and press the [COUNTER RESET] button.<br>2) Connect the oscilloscope's CH-1 with the COMPONENT Y OUT terminal while connecting its CH-2 with the R-Y OUT (B-Y OUT) terminal, and set the oscilloscope for the ADD mode with the same range for both the channels. Set its CH-2 to INV. mode.<br>3) Play the alignment tape MS-2 bowtie.<br>4) Turn the JOG dial so that crossover point of the signals approximately correspond to the center marker.<br>5) Fine adjust the crossover point with VR5 (R-Y) and VR8 (B-Y).<br>6) When the adjustment is complete, press the [SELECT] button to memorize the adjustment value.<br>• Setting of oscilloscope<br>Time sweep : 10 µs/div<br>Range : 0.2 V/div (CH-1, CH-2)<br>CH-2 : inverted |
| 3 | R-Y frequency response adjustment | • Oscilloscope<br>• Alignment tape MS-2 multiburst | • PB | ◎ R-Y OUT (with 75Ω terminator)<br>ⓣ VC3 : 6J (CPNR FREQ)<br>☆ Same amplitude | 1) Adjust VC3 to equalize 2 MHz signal level with 500 kHz signal level. |

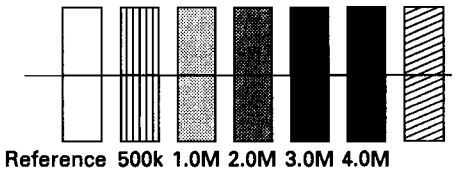


Fig. 3-7-1

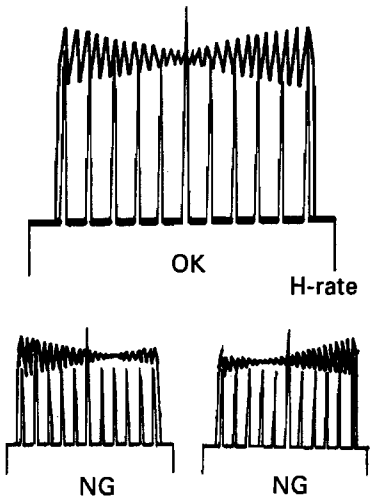


Fig. 3-7-2

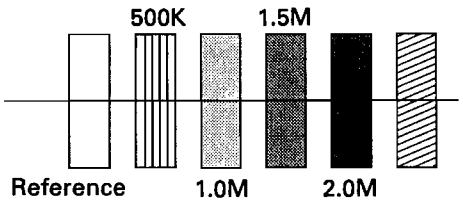


Fig. 3-7-3

| No. | Item | Measuring instruments & Input signals | Mode | Measuring point (◎) Adjustment parts (Ⓣ) Adjustment level (☆) | Adjustment procedure |
|---|---|---|---|---|---|
| 4 | B-Y frequency response adjustment | • Oscilloscope<br>• Alignment tape MS-2 multiburst | • PB | ◎ B-Y OUT (with 75Ω terminator)<br>Ⓣ VC4 : 7J (CPNB FREQ)<br>☆ Same amplitude | 1) Adjust VC4 to equalize 2 MHz signal level with 500 kHz signal level. |
| 5 | R-Y level adjustment | • Oscilloscope<br>• TEST mode 100% marker | • TEST mode [78] LEVEL MARK1 (M)<br>• STOP | ◎ R-Y OUT (with 75Ω terminator)<br>Ⓣ VR3 : 5J (CPNR LEV)<br>☆ 0.350 ± 0.015 Vp-p | 1) Set to TEST mode No. 78 and press the [COUNTER RESET] button.<br>2) Adjust VR3 so that the marker level becomes 0.350 ± 0.015 Vp-p. |
| 6 | B-Y level adjustment | • Oscilloscope<br>• TEST mode 100% marker | • TEST mode [78] LEVEL MARK1 (M)<br>• STOP | ◎ B-Y OUT (with 75Ω terminator)<br>Ⓣ VR6 : 7J (CPNB LEV)<br>☆ 0.350 ± 0.015 Vp-p | 1) Set to TEST mode No. 78 and press the [COUNTER RESET] button.<br>2) Adjust VR6 so that the marker level becomes 0.350 ± 0.015 Vp-p. |
| 7 | Burst level adjustment | • Vectorscope<br>• Black burst signal | • TEST mode [7E] BB OUT & MARK1 (M)<br>• STOP | ◎ LINE-1 OUT (with 75Ω terminator)<br>Ⓣ VR303 : 15J (BST BAL)<br>Ⓣ VR304 : 16J (BST LEV)<br>☆ 0.3 Vp-p | 1) Set to TEST mode No. 7E and press the [COUNTER RESET] button.<br>2) While inputting the composite color-bar signal directly to the vectorscope, adjust the GAIN control so that the spot of burst signal is positioned on the circumference scale on the vectorscope screen.<br>3) In the condition of above step 2), connect the vectorscope with the LINE-1 OUT terminal.<br>4) Adjust VR303 to center the spot on the vectorscope screen.<br>5) Adjust VR304 so that spot of burst signal corresponds to the circumference of the vectorscope. |

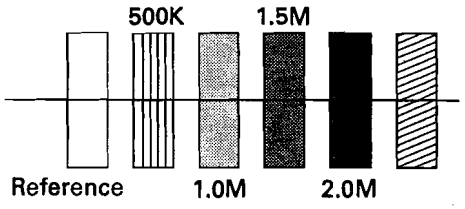


**Fig. 3-7-4**

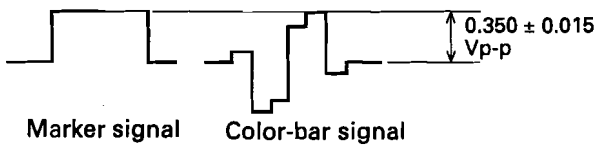


**Fig. 3-7-5**

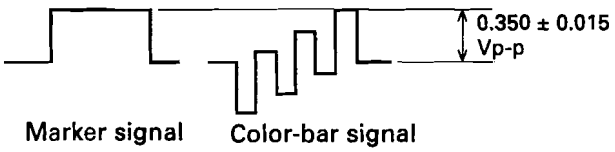


**Fig. 3-7-6**

**Fig. 3-7-7**

| No. | Item | Measuring instruments & Input signals | Mode | Measuring point (◎) Adjustment parts (Ⓣ) Adjustment level (☆) | Adjustment procedure |
|---|---|---|---|---|---|
| 8 | Color output level adjustment | • Vectorscope<br>• Alignment tape MS-2 color bar | • PB | ◎ LINE-1 OUT (with 75Ω terminator)<br>Ⓣ VR11 : 10J (R-Y BAL)<br>Ⓣ VR13 : 14J (B-Y BAL)<br>Ⓣ VR9 : 9J (CPSR LEV)<br>Ⓣ VR12 : 13J (CPSB LEV)<br>Ⓣ VR302 : 14J (HUE) | 1) As vectorscope's gain is raised, adjust VR11 and VR13 to converge spots at the center of vectorscope screen.<br>2) Adjust the vectorscope's GAIN control to set burst signal at the normal position.<br>3) Adjust VR9, VR12 (LEVEL) and VR302 (PHASE) to position each bright spot in a marking " ⊞ " corresponding to it on the vectorscope screen. |
| 9 | Y/C color delay adjustment | • Oscilloscope<br>• Alignment tape MS-2 pulse & bar | • TEST mode [7D] CPSC TIMING (M)<br>• PB | ◎ Y/C Y OUT<br>◎ Y/C C OUT<br>Ⓣ VR301 : 15J (ENCC DL)<br>Ⓣ VR10 : 10J (CPSR DL)<br>☆ Flat | 1) Turn VR301 fully counter-clockwise.<br>2) Set the DIP switch 1-1 to OFF and set 1-2 to ON.<br>3) Connect oscilloscope to the Y/C Y OUT and Y/C C OUT terminals, and set the oscilloscope for ADD mode.<br>4) Set to TEST mode No. 7D and press the [COUNTER RESET] button.<br>5) Adjust Y/C delay waveform to be nearly flat with the JOG dial first, then adjust it precisely with VR301. After adjustment, press the [SELECT] button to memorize the adjustment value.<br>6) Set the DIP switch 1-1 to ON and set 1-2 to OFF.<br>7) Connect oscilloscope to the Y/C Y OUT and Y/C C OUT terminals, and set the oscilloscope for ADD mode.<br>8) Adjust VR10 so that Y and C signal correspond to each other in the delay timing.<br>9) Reset the DIP switch 1-1 and 1-2 to ON. |

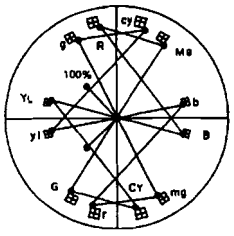


**Fig. 3-7-8**

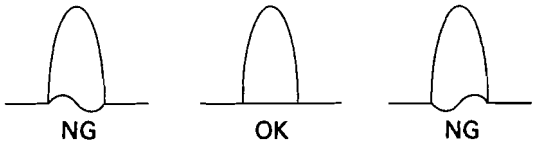


Waveform of 20T portion

**Fig. 3-7-9**

• Setting of oscilloscope
0.2 V/div. for input of Y/C Y OUT signal
0.1 V/div. for input of Y/C C OUT signal

## 3.8 ADJUSTMENT OF SYS/TC CIRCUIT

| No. | Item | Measuring instruments & Input signals | Mode | Measuring point (◎) Adjustment parts (Ⓣ) Adjustment level (☆) | Adjustment procedure |
|---|---|---|---|---|---|
| 1 | On-screen character position adjustment | • Video monitor<br>• Alignment tape MS-2 color bar | • PB<br>• COUNTER SW : CTL | ◎ VIDEO MONITOR OUT<br>☆ VR801 | 1) Adjust VR801 so that the left edge of "C" in "CTL" is just in the border between cyan and green. |

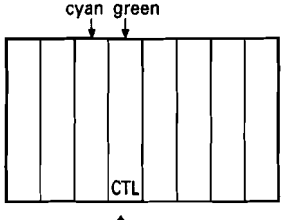


**Adjust the character position so that the left edge of "C" in "CTL" is put in the border between cyan and green.**

**Fig. 3-8-1**

| No. | Item | Measuring instruments & Input signals | Mode | Measuring point (◎) Adjustment parts(ⓣ) Adjustment level (☆) | Adjustment procedure |
|---|---|---|---|---|---|

### 3.9 ADJUSTMENT OF ANA IN CIRCUIT

**Note: This adjustment applies to BR-D85 and BR-D80 only.**

| | | | | | |
|---|---|---|---|---|---|
| 1 | Phase shift adjustment | • Oscilloscope<br>• Alignment tape MS-2 color bar<br>• Component color-bar signal | • PB<br>• EE | ◎ COMPONENT Y OUT<br>ⓣ VR604 : 18J (PS DC)<br>☆ A=B | 1) Play the alignment tape MS-2 color bar.<br>2) Set the rise point of the Y signal at an optional position on the screen of oscilloscope that is connected with the COMPONENT Y OUT terminal.<br>3) Set the VTR to EE mode.<br>4) Adjust VR604 so that the rise point of the component Y signal output in the EE mode is positioned at the same point as the above step 2). |
| 2 | Component Y input level adjustment | • Oscilloscope<br>• Component color-bar signal<br>• TEST mode 100% marker | • TEST mode [78] LEVEL MARK1 (M)<br>• EE | ◎ COMPONENT Y OUT (with 75Ω terminator)<br>ⓣ VR303 : 10J (Y LEV)<br>ⓣ VR601 : 18J (CP Y)<br>(☆ 0.7 Vp-p (LEVEL)) | 1) Set to TEST mode No. 78 and press the [COUNTER RESET] button.<br>2) Adjust VR303 so that the 100% white corresponds to the maker.<br>3) Adjust VR601 so that the blanking portion becomes flat. |
| 3 | YC delay adjustment | • Oscilloscope<br>• Component bowtie signal | • EE | ◎ R-Y OUT<br>◎ B-Y OUT<br>◎ COMPONENT Y OUT<br>ⓣ VR307 : 13E (R DL)<br>ⓣ VR304 : 13F (B DL) | 1) Connect the oscilloscop's CH-1 with the COMPONENT Y OUT terminal while connecting its CH-2 with the R-Y OUT (B-Y OUT) terminal, and set the oscilloscope for the ADD mode with the same range for both the channels. Set its CH-2 to INV. mode.<br>2) Adjust VR307 (VR304) so that crossover point of the signal is positioned at the center marker.<br>• Setting of oscilloscope<br>Time sweep : 10 µs/div<br>Range : 0.2 V/div (CH-1, CH-2)<br>CH-2 inverted |

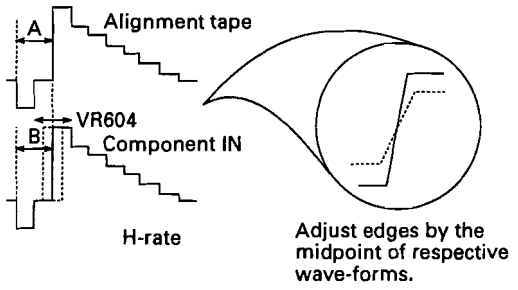


**Fig. 3-9-1**

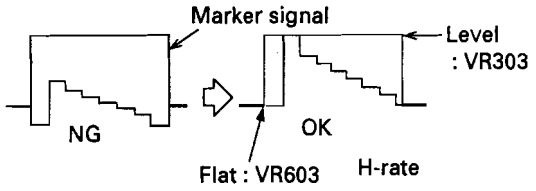


**Fig. 3-9-2**

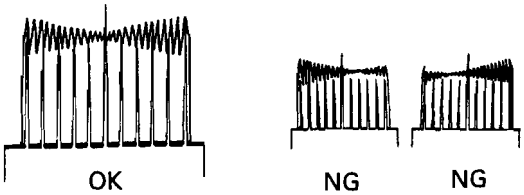


**Fig. 3-9-3**

| No. | Item | Measuring instruments & Input signals | Mode | Measuring point ( ◎ ) Adjustment parts ( ⓣ ) Adjustment level ( ☆ ) | Adjustment procedure |
|---|---|---|---|---|---|
| 4 | Component R-Y input level adjustment | • Oscilloscope<br>• Component color-bar signal<br>• TEST mode 100% marker | • TEST mode [78] LEVEL MARK1 (M)<br>• EE | ◎ R-Y OUT (with 75Ω terminator)<br>ⓣ VR301 : 9J (R LEV)<br>ⓣ VR602 : 16J (CP R)<br>(☆ 0.7 Vp-p (R-Y level)) | 1) Set to TEST mode No. 78 and press the [COUNTER RESET] button.<br>2) Adjust the level (with VR301) and pedestal (with VR602) of the component signal so that the component signal corresponds to the marker.<br>**Note:** For the above specification, it is prerequisite to input component color-bar signal of 100% color and 0% setup level. If color-bar signal of 75% color and 0% setup level is used as input signal, adjust the level to 0.525 Vp-p. |
| 5 | Component B-Y input level adjustment | • Oscilloscope<br>• Component color-bar signal<br>• TEST mode 100% marker | • TEST mode [78] LEVEL MARK1 (M)<br>• EE | ◎ B-Y OUT (with 75Ω terminator)<br>ⓣ VR302 : 10J (B LEV)<br>ⓣ VR603 : 15J (CP B)<br>(☆ 0.7 Vp-p (B-Y level)) | 1) Set to TEST mode No. 78 and press the [COUNTER RESET] button.<br>2) Adjust the level (with VR302) and pedestal (with VR603) of the component signal so that the component signal corresponds to the marker.<br>**Note:** For the above specification, it is prerequisite to input component color-bar signal of 100% color and 0% setup level. If color-bar signal of 75% color and 0% setup level is used as input signal, adjust the level to 0.525 Vp-p. |
| 6 | VITC SEP DC level adjustment | • Oscilloscope<br>• Component color-bar signal | • EE | ◎ TP310 : 12B<br>◎ TP311 : 12C<br>ⓣ VR308 : 12C (VITC DC)<br>☆ 50% DC level | 1) Connect oscilloscope's probes to TP310 and TP311, and set the oscilloscope for CHOP mode and DC coupling mode respectively.<br>2) Adjust VR308 so that TP310's DC level appears at the same point as 50% of TP311's Y signal (pedestal to 100% white). |

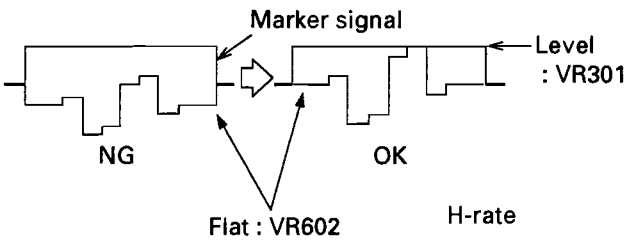


**Fig. 3-9-4**

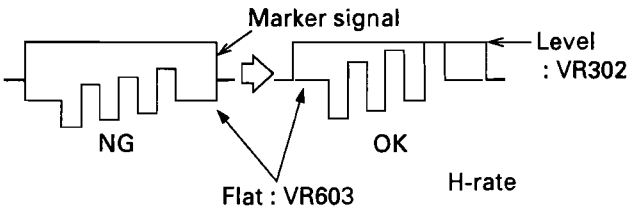


**Fig. 3-9-5**

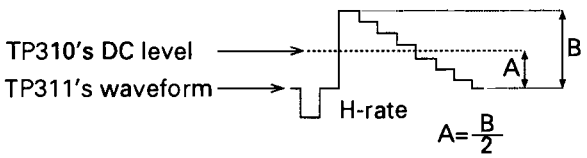


**Fig. 3-9-6**

• Setting of oscilloscope : 50 mV/div
GND level of both channel are the first graduation from the top.

| No. | Item | Measuring instruments & Input signals | Mode | Measuring point ( ◎ ) Adjustment parts ( ⓣ ) Adjustment level ( ☆ ) | Adjustment procedure |
|---|---|---|---|---|---|
| 7 | C. DET adjustment | • Oscilloscope<br>• No signal | • EE | ◎ TP16 : 6D<br>ⓣ VR4 : 6D (C DET)<br>☆ 2.5 $V_{DC}$ | 1) Adjust VR4 so that level at TP16 becomes 2.5 $V_{DC}$. |
| 8 | Decoder error voltage adjustment | • Oscilloscope<br>• Y/C color-bar signal<br>↓<br>Y/C IN | • EE | ◎ TP14 : 4E<br>◎ LINE-1 OUT (TRIG.)<br>ⓣ VC1 : 6D<br>☆ A = B | 1) Adjust VC1 to equalize level A with level B. |
| 9 | Y/C Y input level adjustment | • Oscilloscope<br>• TEST mode 100% marker<br>• Y/C color-bar signal<br>↓<br>Y/C IN | • TEST mode [78] LEVEL MARK1(M)<br>• EE | ◎ COMPONENT Y OUT (with 75Ω terminator)<br>ⓣ VR3 : 4J (YC Y LEV)<br>(☆ 0.7 Vp-p) | 1) Set to TEST mode No. 78 and press the [COUNTER RESET] button.<br>2) Adjust VR3 so that the component Y signal corresponds to the marker. |
| 10 | Y/C input, R-Y blanking adjustment | • Oscilloscope<br>• Y/C color-bar siganl<br>↓<br>Y/C IN | • EE | ◎ TP21 : 7F<br>◎ R-Y OUT<br>ⓣ VR7 : 8J (HUE OF S1)<br>ⓣ VR10 : 7J (R BLK) | 1) Adjust VR7 to flatten TP21's waveform.<br>2) Adjust VR10 so that output signal from the R-Y OUT becomes flat in the blanking portion. |

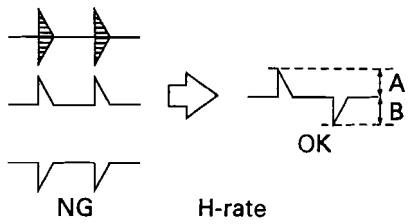


**Fig. 3-9-7**

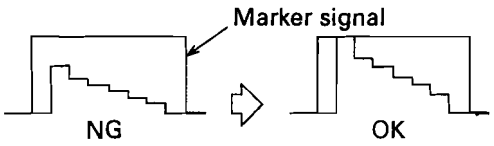


**Fig. 3-9-8**

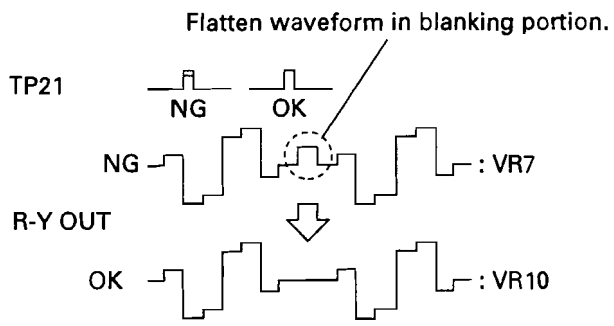


**Fig. 3-9-9**

| No. | Item | Measuring instruments & Input signals | Mode | Measuring point ( ◎ ) Adjustment parts ( ⓣ ) Adjustment level ( ☆ ) | Adjustment procedure |
|---|---|---|---|---|---|
| 11 | Y/C input, B-Y blanking adjustment | • Oscilloscope<br>• Y/C color-bar signal<br>↓<br>Y/C IN | • EE | ◎ B-Y OUT<br>ⓣ VR9 : 8J (B BLK) | 1) Adjust VR9 so that output signal from the B-Y OUT becomes flat in the blanking portion. |
| 12 | Y/C input YC delay adjustment | • Oscilloscope<br>• Y/C color-bar signal<br>↓<br>Y/C IN | • EE | ◎ R-Y OUT<br>◎ B-Y OUT<br>◎ COMPONENT Y OUT<br>ⓣ VR306 : 13D (YC R DL)<br>ⓣ VR305 : 13F (YC B DL) | 1) Connect oscilloscope to the Y-OUT and R-Y OUT (B-Y OUT), and set the oscilloscope to CHOP mode.<br>2) Adjust VR306 (VR305) so that the Y-OUT signal and R-Y OUT (B-Y OUT) signal are equivalent to each other in their edges. |
| 13 | Y/C input color level adjustment | • Vectorscope<br>• Y/C color-bar signal<br>↓<br>Y/C IN | • EE | ◎ LINE-1 OUT (with 75Ω terminator)<br>ⓣ VR5 : 6J (DEC R LEV)<br>ⓣ VR6 : 7J (DEC B LEV)<br>ⓣ VR8 : 9J (HUE OF S2) | 1) Set the input level setting of the vectorscope to "100%".<br>2) Adjust VR5, VR6 and VR8 so that every spot is positioned in a box marking " ⊞ " corresponding to it.<br>**Note:** For the above adjustment, it is prerequisite to input Y/C color-bar signal of 100% color and 0% setup level. If color-bar signal of 75% color level is used as input signal, set the inpout level setting of the vectorscope to "75%". |

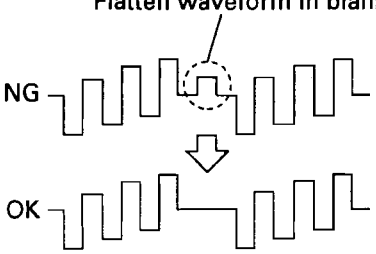


**Fig. 3-9-10**

Make these edges corresponding to each other.

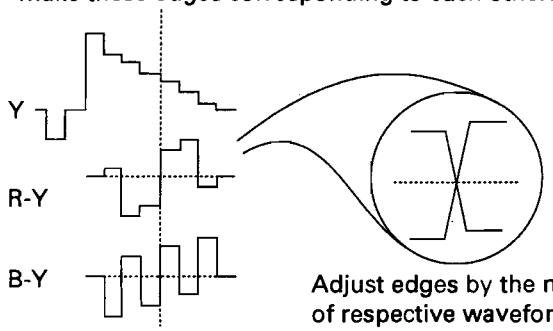


**Fig. 3-9-11**

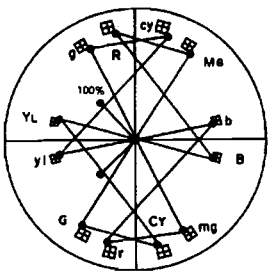


**Fig. 3-9-12**

| No. | Item | Measuring instruments & Input signals | Mode | Measuring point ( ◎ ) Adjustment parts ( ⓣ ) Adjustment level ( ☆ ) | Adjustment procedure |
|---|---|---|---|---|---|
| 14 | LINE input, Y level adjustment | • Oscilloscope<br>• TEST mode 100% marker<br>• Composite color-bar signal<br>↓<br>LINE IN | • TEST mode [78] LEVEL MARK1 (M)<br>• EE | ◎ COMPONENT Y OUT (with 75Ω terminator)<br>ⓣ VR2 : 6J (COMB Y)<br>(☆ 0.7 Vp-p (Y level)) | 1) Set to TEST mode No. 78 and press the [COUNTER RESET] button.<br>2) Adjust VR2 so that the component Y signal corresponds to the marker. |
| 15 | LINE input, color level adjustment | • Vectorscope<br>• Composite color-bar signal<br>↓<br>LINE IN | • EE | ◎ LINE-1 OUT (with 75Ω terminator)<br>ⓣ VR1 : 5J (COMB C) | 1) Set the input level setting of the vectorscope to "100%".<br>2) Adjust so that every spot is positioned in a box marking " ⊞ " corresponding to it.<br>**Note:** For the above adjustment, it is prerequisite to input Y/C color-bar signal of 100% color and 0% setup level. If color-bar signal of 75% color level is used as input signal, set the input level setting of the vectorscope to "75%". |

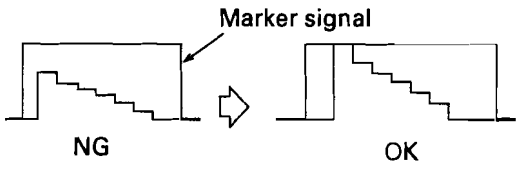


**Fig. 3-9-13**

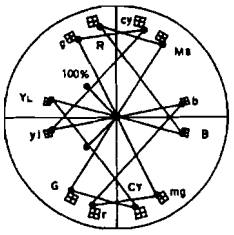


**Fig. 3-9-14**

### 3.10 ADJUSTMENT OF AUDIO CIRCUIT

| No. | Item | Measuring instruments & Input signals | Mode | Measuring point ( ◎ ) Adjustment parts ( ⓣ ) Adjustment level ( ☆ ) | Adjustment procedure |
|---|---|---|---|---|---|
| 1 | Audio LINE output level adjustment | • Audio tester<br>• Alignment tape MSHV-1 (1 kHz digital audio segment) | • TEST mode [50] AU LINE OUT LV. (M)<br>• PB<br>• AUDIO OUT LEVEL SW (Rear panel) +4 dB<br>• AUDIO MONITOR SWITCH :DA1 or DA2 | ◎ AUDIO OUT<br>ⓣ [COUNTER RESET] button<br>ⓣ JOG dial<br>☆ +4 dBs | 1) Connect an audio tester to the AUDIO OUT DA1 (or DA2).<br>2) Set to TEST mode No. 50.<br>3) Press the [COUNTER RESET] button, and the VTR enters the manual adjustment mode.<br>5) Set the AUDIO MONITOR switch to DA1 (or DA2).<br>**Note:** If the AUDIO MONITOR switch is set wrong, the [JOG] dial cannot bring satisfactory result in adjustment.<br>6) Adjust output level to be +4 dBs with the [JOG] dial.<br>7) Press the [SELECT] button to fix the adjustment value. |

| No. | Item | Measuring instruments & Input signals | Mode | Measuring point ( ◎ )<br>Adjustment parts ( ⓣ )<br>Adjustment level ( ☆ ) | Adjustment procedure |
|---|---|---|---|---|---|

### 3.11 ADJUSTMENT OF TRACKING METER

| | | | | | |
|---|---|---|---|---|---|
| 1 | Tracking meter adjustment | • Built-in color-bar signal (D85,D80)<br>• Alignment tape MSHV-1 (D50) | • TEST mode [84] TR METER(A)<br>• REC<br>↓<br>PB (D85,D80)<br>• PB (D50) | ⓣ [COUNTER RESET] button | 1) Set to TEST mode No. 84.<br>2) Play back the self recorded portion (D85, 80) or the alignment tape MSHV-1 (D50).<br>3) Press the [COUNTER RESET] button, and the VTR starts the adjustment mode automatically. |

# SECTION 4

# DIAGRAMS AND CIRCUIT BOARDS

# CONTENTS


4.1 REPLACING SUBMINATURE "CHIP" PARTS ..... 4-2
4.2 INDEX TO PAGES OF MAIN BOARDS AND CIRCUIT BOARD LOCATION ..... 4-4
4.2.1 Index to pages of main boards ..... 4-4
4.2.2 Circuit board location ..... 4-4
4.2.3 VIDEO BLOCK & AUDIO BLOCK DIAGRAMS ..... 4-5
4.3 PV PRE CIRCUIT BOARD BLOCK DIAGRAM ..... 4-6
4.4 SERVO CIRCUIT BLOCK DIAGRAM ..... 4-7
4.5 REC ITI CIRCUIT BOARD BLOCK DIAGRAM (D85/D80) ..... 4-8
4.6 ANA IN CIRCUIT BOARD BLOCK DIAGRAM (D85/D80) ..... 4-9
4.7 PV PROCESS CIRCUIT BOARD BLOCK DIAGRAMS ..... 4-10
4.8 OUT MEM CIRCUIT BOARD BLOCK DIAGRAM ..... 4-14
4.9 OUT GEN CIRCUIT BOARD BLOCK DIAGRAM ..... 4-15
4.10 OUT ENC CIRCUIT BOARD BLOCK DIAGRAM ..... 4-16
4.11 OPERATION CIRCUIT BOARD BLOCK DIAGRAM ..... 4-17
4.12 RF PROCESS CIRCUIT BLOCK DIAGRAMS ..... 4-18
4.12.1 RF PROCESS-1 CIRCUIT BOARD BLOCK DIAGRAMS ..... 4-18
4.12.2 RF PROCESS-2 CIRCUIT BOARD BLOCK DIAGRAM ..... 4-20
4.13 AUDIO CIRCUIT BLOCK DIAGRAMS ..... 4-21
4.14 SYS/TC CIRCUIT BOARD BLOCK DIAGRAMS ..... 4-24
4.15 OVERALL WIRING DIAGRAMS ..... 4-26
4.16 MOTHER-1 SCHEMATIC DIAGRAMS ..... 4-29
4.17 MOTHER-1 CIRCUIT BOARD ..... 4-33
4.18 MOTHER-2 SCHEMATIC DIAGRAM ..... 4-34
4.19 MOTHER-2 CIRCUIT BOARD ..... 4-35
4.20 PV PRE SCHEMATIC DIAGRAM ..... 4-36
4.21 PV PRE CIRCUIT BOARD ..... 4-36
4.22 REC/ITI SCHEMATIC DIAGRAM (D85/D80) ..... 4-37
4.23 REC/ITI CIRCUIT BOARD ..... 4-38
4.24 PV PROCESS SCHEMATIC DIAGRAMS ..... 4-39
4.25 PV PROCESS CIRCUIT BOARDS ..... 4-48
4.26 RF PROCESS-1 SCHEMATIC DIAGRAMS ..... 4-52
4.27 RF PROCESS-1, -2 CIRCUIT BOARD ..... 4-54
4.28 RF PROCESS-2 SCHEMATIC DIAGRAMS ..... 4-56
4.29 OUT MEM SCHEMATIC DIAGRAMS ..... 4-58
4.30 OUT MEM CIRCUIT BOARD ..... 4-60
4.31 ANA IN SCHEMATIC DIAGRAMS (D85/D80) ..... 4-61
4.32 ANA IN CIRCUIT BOARD ..... 4-64
4.33 OUT/GEN SCHEMATIC DIAGRAMS ..... 4-67
4.34 OUT/GEN CIRCUIT BOARD ..... 4-70
4.35 OUT ENC SCHEMATIC DIAGRAMS ..... 4-74
4.36 OUT ENC CIRCUIT BOARD ..... 4-76
4.37 ANA AUDIO CIRCUIT BOARD ..... 4-78
4.38 ANA AUDIO SCHEMATIC DIAGRAMS ..... 4-80
4.39 DIG AUDIO SCHEMATIC DIAGRAMS ..... 4-82
4.40 DIG AUDIO CIRCUIT BOARD ..... 4-85
4.41 AUDIO I/O SCHEMATIC DIAGRAMS ..... 4-86
4.42 AUDIO I/O CIRCUIT BOARD ..... 4-88
4.43 M-CTL/SERVO SCHEMATIC DIAGRAMS ..... 4-89
4.44 M-CTL/SERVO CIRCUIT BOARD ..... 4-93
4.45 SYS/TC SCHEMATIC DIAGRAMS ..... 4-95
4.46 SYS/TC CIRCUIT BOARD ..... 4-97
4.47 OPERATION SCHEMATIC DIAGRAM ..... 4-99
4.48 OPERATION CIRCUIT BOARD ..... 4-100
4.49 REEL MDA SCHEMATIC DIAGRAM ..... 4-102
4.50 REEL MDA CIRCUIT BOARD ..... 4-103
4.51 REAR(REAR-1, REAR-2) SCHEMATIC DIAGRAMS ..... 4-104
4.52 REAR(REAR-1, REAR-2) CIRCUIT BOARDS ..... 4-105
4.53 E. SENS/FLY E SCHEMATIC DIAGRAM ..... 4-107
4.54 E. SENS/FLY E CIRCUIT BOARDS ..... 4-108
4.55 DIG I/O CIRCUIT BOARD BLOCK DIAGRAM (D85) ..... 4-109
4.56 DIG I/O SCHEMATIC DIAGRAM (D85) ..... 4-110
4.57 DIG I/O CIRCUIT BOARD (D85) ..... 4-113
SCHEMATIC DIAGRAM OF ICs ..... IC-1

# SECTION 4
# DIAGRAMS AND CIRCUIT BOARDS

## ■ FOREWORD

### 1. Expression of connector

Connector is expressed in two ways.

1) The following illustrates 'CN2 pin 1' for example.

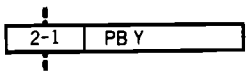


2) The following illustrates 'CN1 pins 1 and 2'.

### 2. Expression of wiring

As the following circuit diagram is divided to print on some sheets, such an indication as the following is found in the case the wiring extends over two or more divided sections.

1) Circuit diagram divided into two or more sections:

| Board | Board Name | Number of divided sections |
|---|---|---|
| 0 1 | MOTHER-1 | 1/4~4/4 |
| 1 2 | RF PROCESS-1 | 1/2~2/2 |
| 1 3 | PV PROCESS | 1/9~9/9 |
| 1 4 | OUT MEM | 1/2~2/2 |
| 1 5 | ANA IN | 1/3~3/3 |
| 1 7 | OUT GEN | 1/3~3/3 |
| 1 8 | RF PROCESS-2 | 1/3~3/3 |
| 1 9 | OUT ENC | 1/2~2/2 |
| 2 0 | ANA AUDIO | 1/2~2/2 |
| 2 1 | DIG AUDIO | 1/3~3/3 |
| 2 2 | AUDIO I/O | 1/2~2/2 |
| 3 0 | M-CTL/SERVO | 1/2~2/2 |
| 3 1 | SYS/TC | 1/2~2/2 |
| — | OVER ALL | 1/3~3/3 |

2) Indication of wiring which extends to another section:

(Example)

On the "1/2" diagram of REC/PB Y board, such an indication as the following is found on the "PB (H)" signal line.

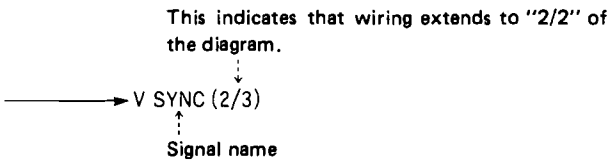


In the above case, the end of the wiring is connected to the "2/2-PB (H)" on the 2nd section of the diagram.

### 3. Wiring of connector

(Example)

In the above example, CN1 is connected with CN2 on 1 2 SYSCON board.

### 4. Unit of value

Unless otherwise specified:

1) Resistance is in Ω (1/6 W)
2) Capacitance in μF
3) Inductance in μH
4) Screened parts (in ▒▒▒) are important for safety assurance. When replacing them, use specified parts.

### 5. Others

1) Diagrams whose titles are followed by a model number such as BR-D80 or BR-D50 appearing in this section apply to the specified model only. In other words, circuit diagrams, schematic diagrams, board patterns, etc. appearing under such titles are exclusive diagrams for the specified model.
2) There are parts whose symbol numbers or constants are marked up with D80 or D50 in circuit diagrams common to BR-D80 and D50 indicates that the part or constant is used in the specified model only.
3) In regard of a board assembly whose circuit is composed of multi-layered board patterns such as 4- or 6-layered patterns, board patterns of the power supply lines and grounding lines are omitted in this section.

**Note:** For detail of each electrical part, refer to Section 6 "ELECTRICAL PARTS LIST" by it symbol number.

## 4.1 REPLACING SUBMINATURE "CHIP" PARTS

**1. General description**

Some of resistors, variable resistors, shorting jumpers (0 Ω resistors), ceramic capacitors, transistors, diodes are chip parts. Those removed once cannot be used again.

**2. Replacement of chip parts**

Replacement of chip parts should be performed as follows. Use a soldering iron (17 W for 260–30°C approx.) that has sharp-pointed tip and high performance in insulation.
It is more convenient to use a soldering iron with solder absorber (55 W approx.).

(1) Soldered condition of chip parts

- Resistors, capacitors, etc.

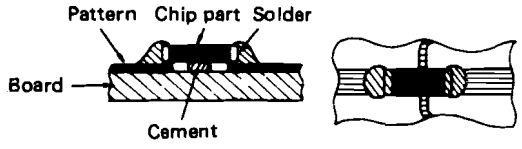


- Transistors, diodes, etc.

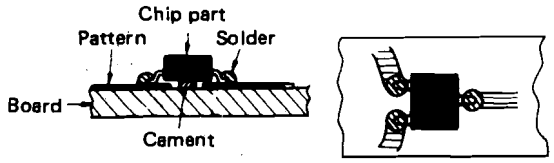


(2) Removing of chip parts

- Resistors, capacitors, etc.

i ) Melt solder at a side.

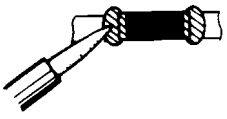

ii) Holding the chip with tweezers, melt solder at the other side.

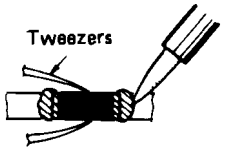


iii) Take off the chip in twisting and sliding motion.

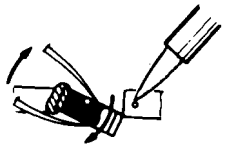

- Transistors, diodes, etc.

i ) Melt solder at the side of single lead.

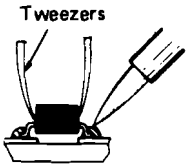


ii) Lift the unsolderd side upwards.

iii) Simultaneously melt solder at two leads of the other side and pull up the chip.

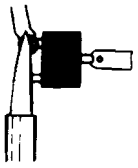

(3) Preheating and soldering of chip parts

Except transistors, make sure to preheat all chip parts, capacitors in particular, with a hot wind of 150°C approx. (of a hair dryer, etc.) for 2 minutes just before soldering, and immediately solder by a soldering iron of approx. 30 W.

(4) Attaching of chip parts

i ) Heap up a proper amount of solder beforehand.

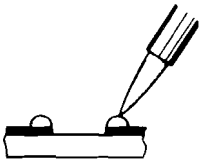

ii) Holding down a new chip by tweezers, solder it to the board by a soldering iron to melt solder from its lower part to the upper part (in the direction shown by a big arrow).

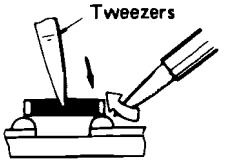


**Note:**
- Don't heat chip parts over 3 seconds.
- Don't rub electrodes.
- Don't use chip parts which were once removed.
- No cement is required.

### 3. Shapes of transistors & diodes

- **Transistors**

| | |
|---|---|
| DTA124EK | 2 |
| DTA144EK | 2 |
| DTC114EK | 1 |
| DTC114YK | 1 |
| DTC144EK | 1 |
| DTC144EU | 1 |
| FMG2 | 3 |
| FMS1 | 4 |
| FMW1 | 5 |
| IMX1 | 6 |
| IMZ1 | 7 |
| IMZ2 | 8 |
| 2SA1022C | 9 |
| 2SB709 | 9 |
| 2SC2412K | 9 |
| 2SC2778 | 9 |
| 2SC4081 | 9 |
| 2SD601/A | 9 |
| 2SD602/A | 9 |
| 2SK621 | 10 |

- **Diodes**

| | |
|---|---|
| DAN202K | 11 |
| DAP202K | 12 |
| MA28WA | 13 |
| MA3056 | 13 |
| MA3075 | 13 |

| 1 | 6 | 11 |
|---|---|---|
| 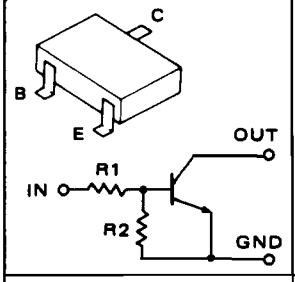  | 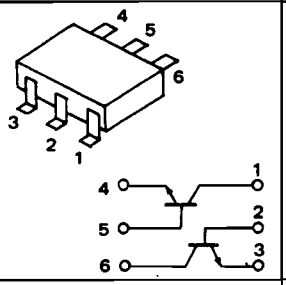  | 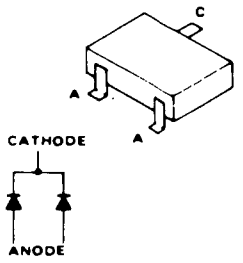  |
| **2** | **7** | **12** |
| 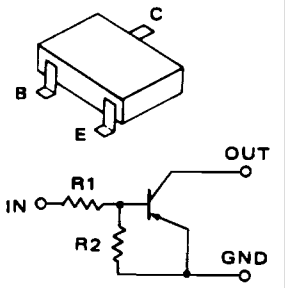  | 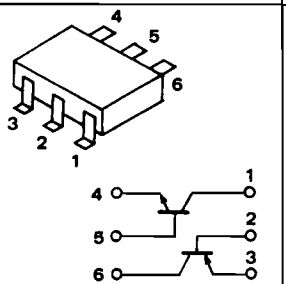  | 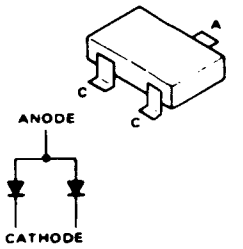  |
| **3** | **8** | **13** |
| 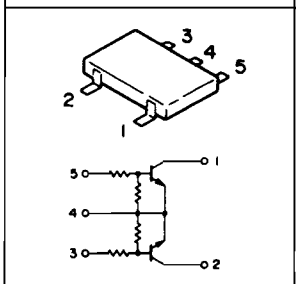  | 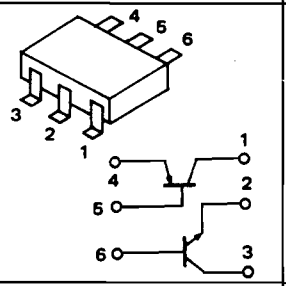  | 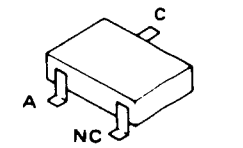  |
| **4** | **9** | |
| 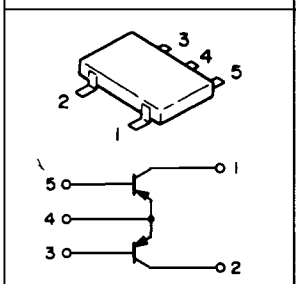  | 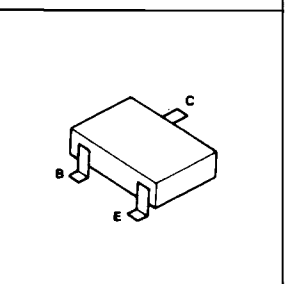  | |
| **5** | **10** | |
| 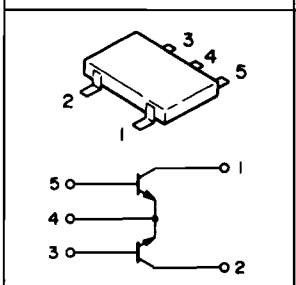  | 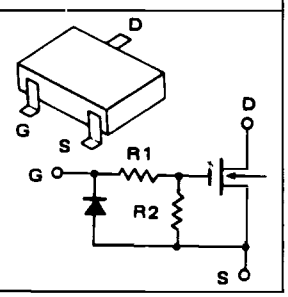  | |

## 4.2 INDEX TO PAGES OF MAIN BOARDS AND CIRCUIT BOARD LOCATION

### 4.2.1 Index to pages of main boards

| Board No. | Board Name | Page of diagram | | | |
|---|---|---|---|---|---|
| | | Block diagram | Schematic diagram | Circuit board | Parts list |
| 01 | MOTHER-1 | — | 4-29 to 32 | 4-33 | 6-1 |
| 02 | MOTHER-2 | — | 4-34 | 4-35 | 6-1 |
| 10 | PV PRE | 4-6 | 4-35 | 4-35 | — |
| 11 | REC/ITI | 4-8 | 4-36 | 4-37 to 38 | 6-2 to 5 |
| 12 | RF PROCESS-1 | 4-18 to 19 | 4-50 to 51 | 4-52 | 6-6 to 12 |
| 13 | PV PROCESS | 4-10 to 13 | 4-39 to 47 | 4-48 to 49 | 6-12 to 17 |
| 14 | OUT MEM | 4-14 | 4-56 to 57 | 4-58 | 6-17 to 21 |
| 15 | ANA IN | 4-9 | 4-59 to 61 | 4-62 to 4-63 | 6-21 to 31 |
| 17 | OUT GEN | 4-15 | 4-64 to 66 | 4-67 to 68 | 6-31 to 40 |
| 18 | RF PROCESS-2 | 4-20 | 4-54 to 55 | 4-52 | 6-40 to 46 |
| 19 | OUT ENC | 4-16 | 4-69 to 70 | 4-71 to 72 | 6-47 to 51 |
| 20 | ANA AUDIO | 4-23 | 4-74 to 75 | 4-73 | 6-52 to 55 |
| 21 | DIG AUDIO | 4-22 | 4-76 to 78 | 4-79 | 6-55 to 61 |
| 22 | AUDIO I/O | 4-21 | 4-80 to 81 | 4-82 | 6-61 to 64 |
| 30 | M-CTL/SERVO | 4-7 | 4-83 to 84 | 4-85 to 86 | 6-65 to 70 |
| 31 | SYS/TC | 4-24 to 4-25 | 4-87 to 88 | 4-89 to 90 | 6-70 to 74 |
| 32 | OPERATION | 4-17 | 4-91 | 4-92 to 93 | 6-75 to 77 |
| 33 | HP | — | — | 4-92 to 93 | 6-78 |
| 36 | REEL MDA | 4-7 | 4-94 | 4-95 | 6-78 to 79 |
| 40 | REAR-1 | — | 4-96 | 4-98 | 6-79 to 80 |
| 41 | REAR-2 | — | 4-97 | 4-97 | 6-80 to 81 |
| 50 | END SENSOR/FLYING ERASE | — | 4-99 | 4-100 | 6-81 to 82 |
| 53 | MODE MOTOR | — | — | 4-100 | 6-82 |
| 54 | C. HOUSING | — | — | — | 6-82 |
| 55 | MECHA TERMINAL | — | — | 4-100 | 6-82 |
| 56 | A/C HEAD | 4-23 | 4-28 | 4-100 | 6-82 |
| 57 | W SENSOR | — | — | 4-100 | 6-82 |
| 60 | DIG I/O | 4-101 | 4-102 | 4-105 | 6-83 to 86 |

### 4.2.2 Circuit board location

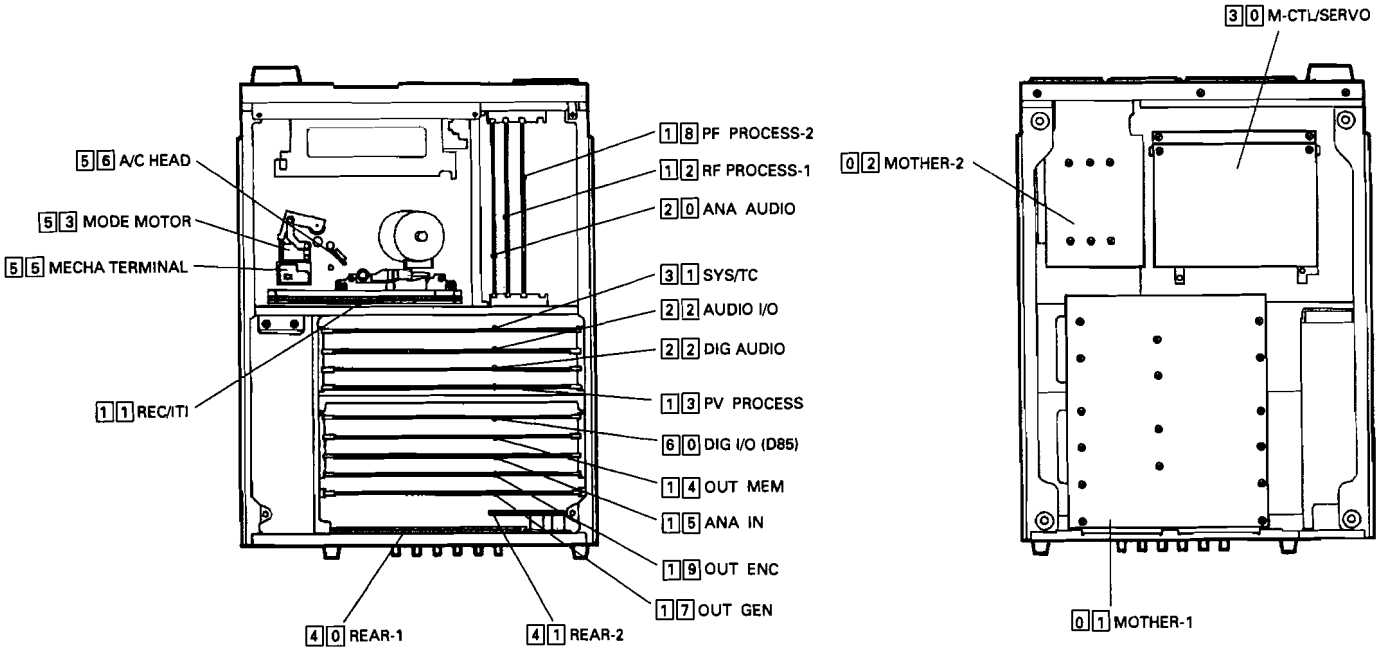

### 4.2.3 VIDEO BLOCK & AUDIO BLGCK DIAGRAMS

**— VIDEO BLOCK DIAGRAM —**

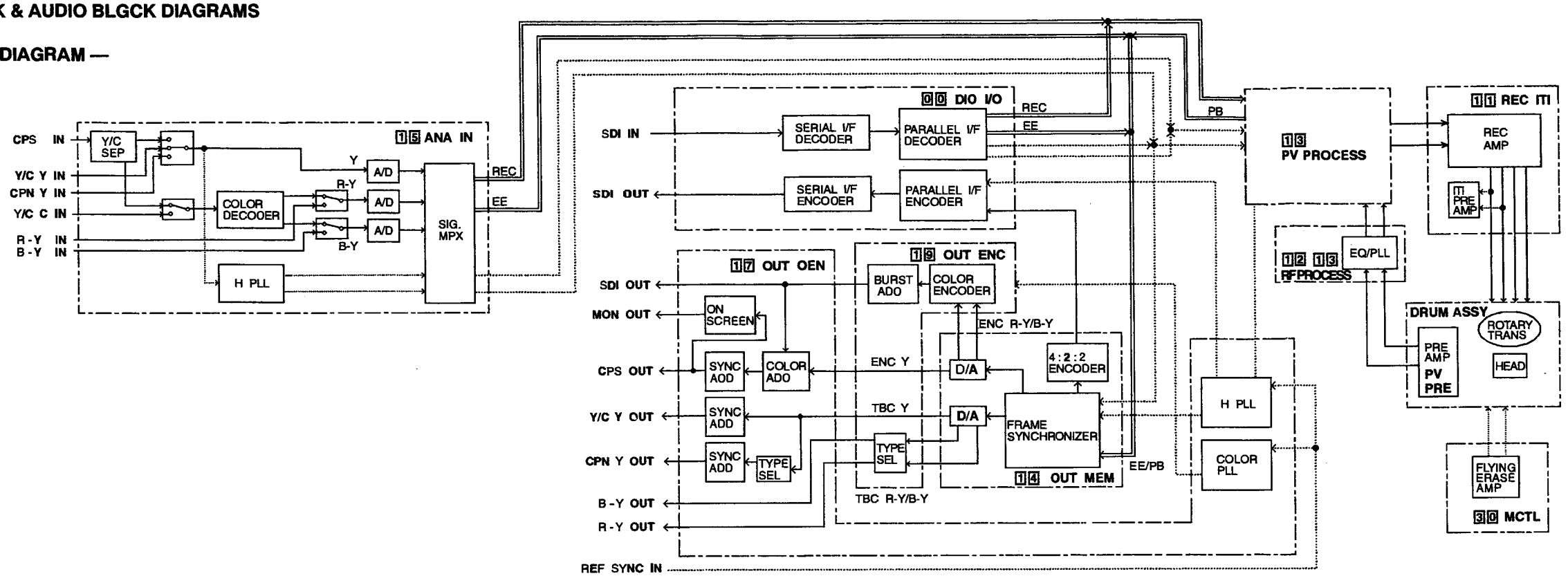


**— AUDIO BLOCK DIAGRAM —**

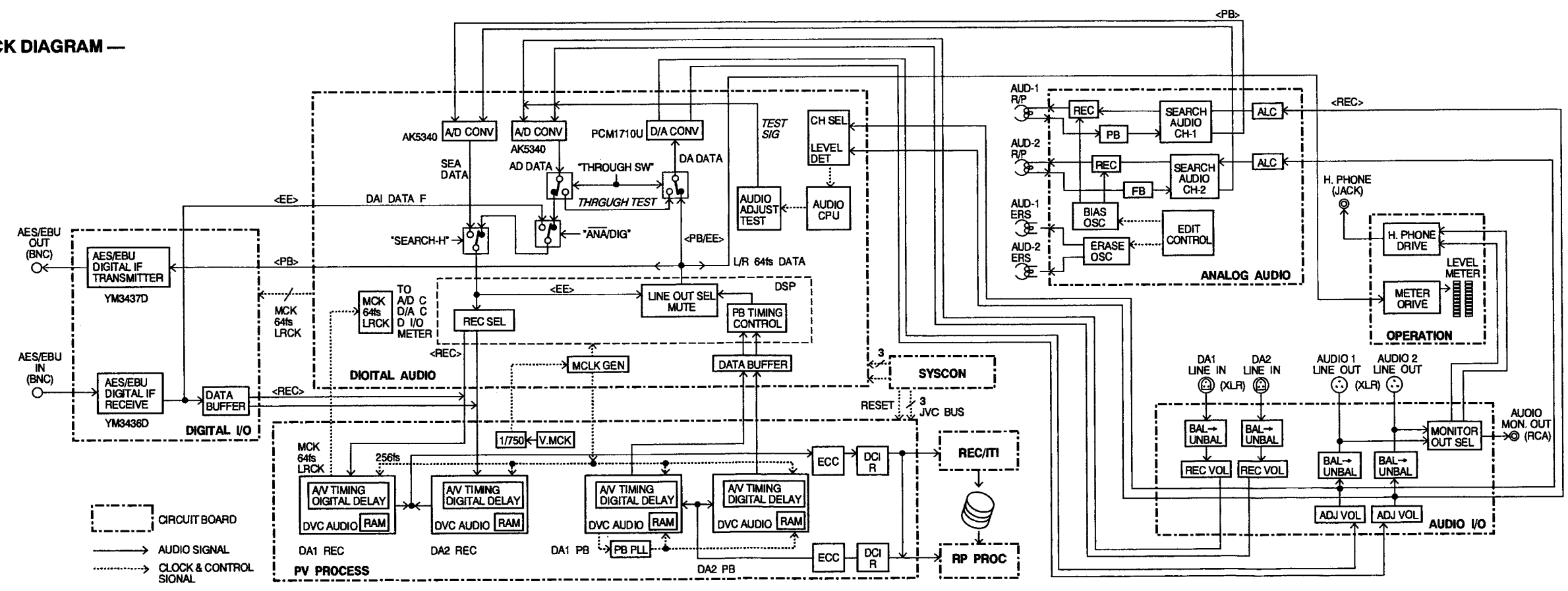

## 4.3 PV PRE CIRCUIT BOABD BLOCK DIAGRAM

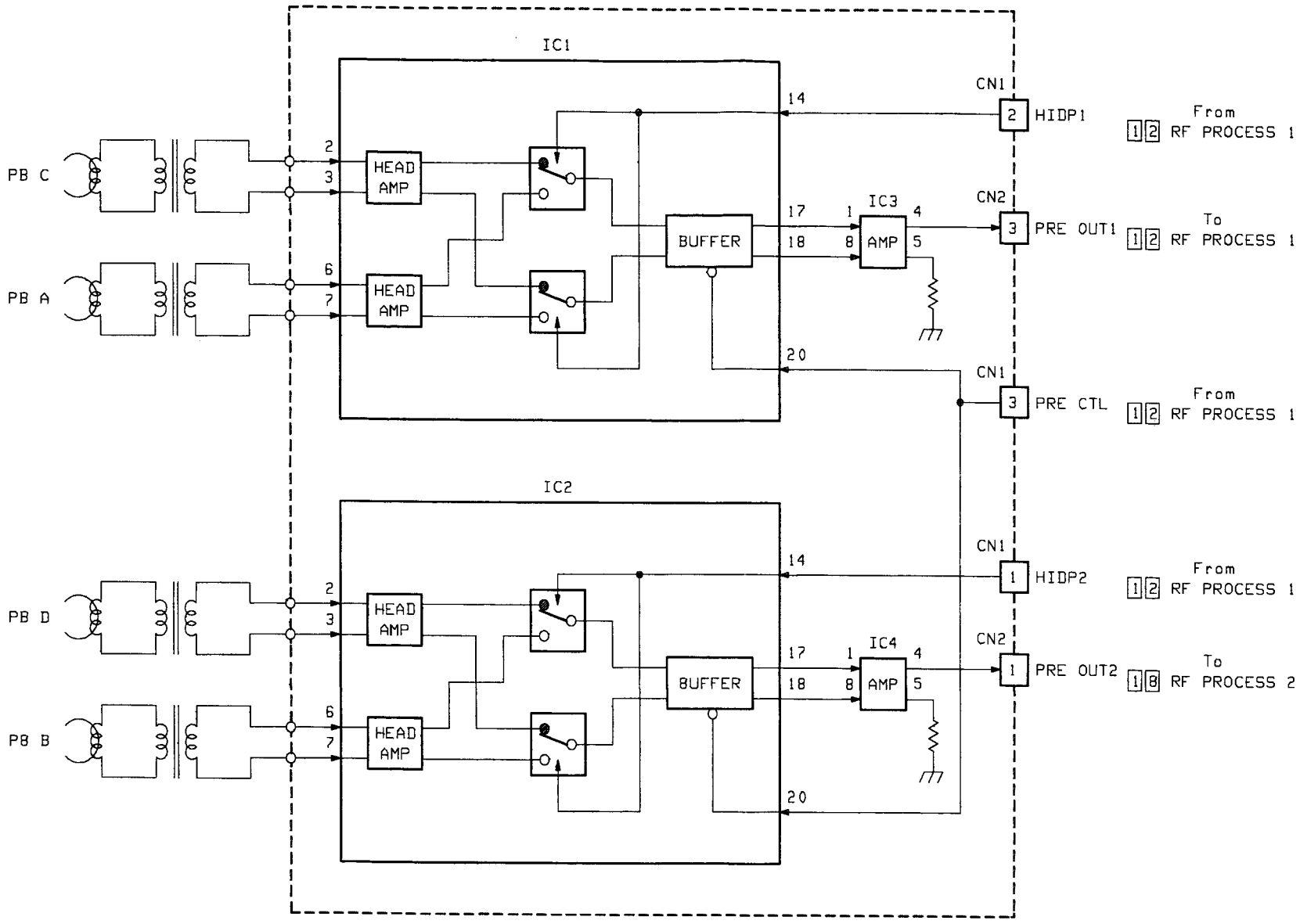

## 4.4 SERVO CIRCUIT RLGCK DIAGRAM

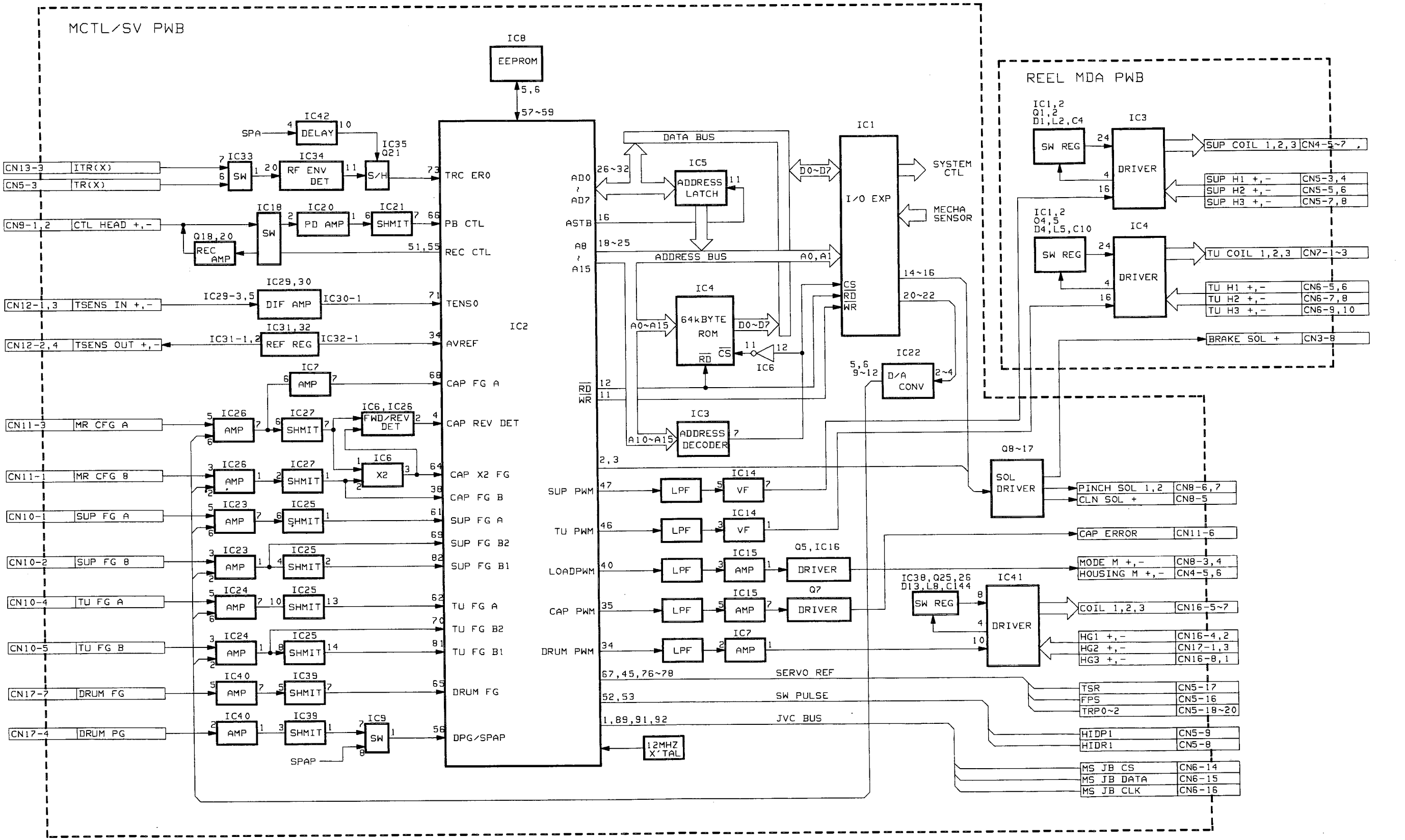

## 4.5 REC ITI CIRCUIT BOARD BLOCK DIAGRAM (D85/D80)

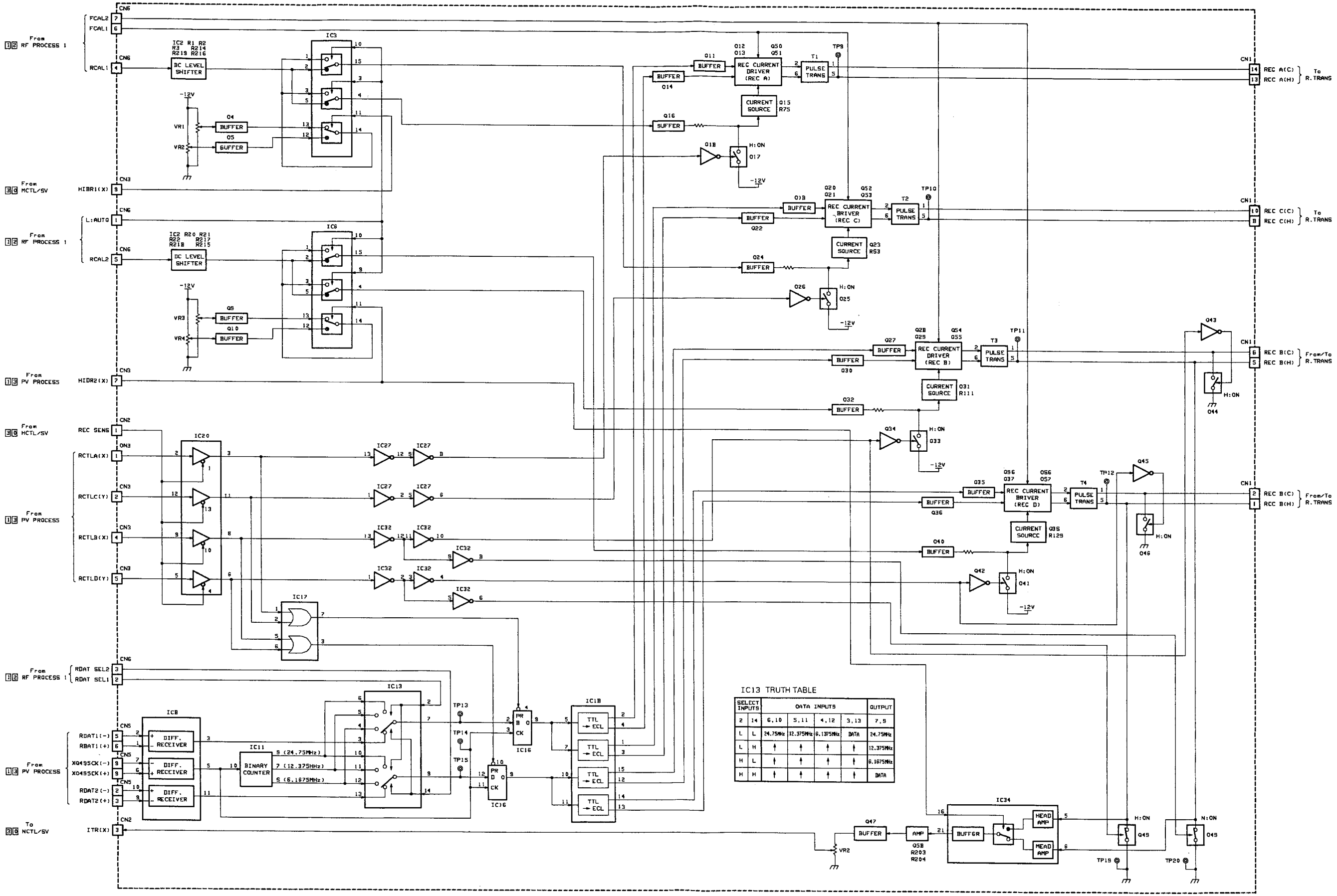


IC13 TRUTH TABLE

| SELECT INPUTS | | DATA INPUTS | | | | OUTPUT |
|---|---|---|---|---|---|---|
| 2 | 14 | 6,10 | 5,11 | 4,12 | 3,13 | 7,9 |
| L | L | 24.75MHz | 12.375MHz | 6.1875MHz | DATA | 24.75MHz |
| L | H | ↑ | ↑ | ↑ | ↑ | 12.375MHz |
| H | L | ↑ | ↑ | ↑ | ↑ | 6.1875MHz |
| H | H | ↑ | ↑ | ↑ | ↑ | DATA |

## 4.5 ANA IN CIRCUIT ROARD RLOCK DIAGRAM (D85/D80)

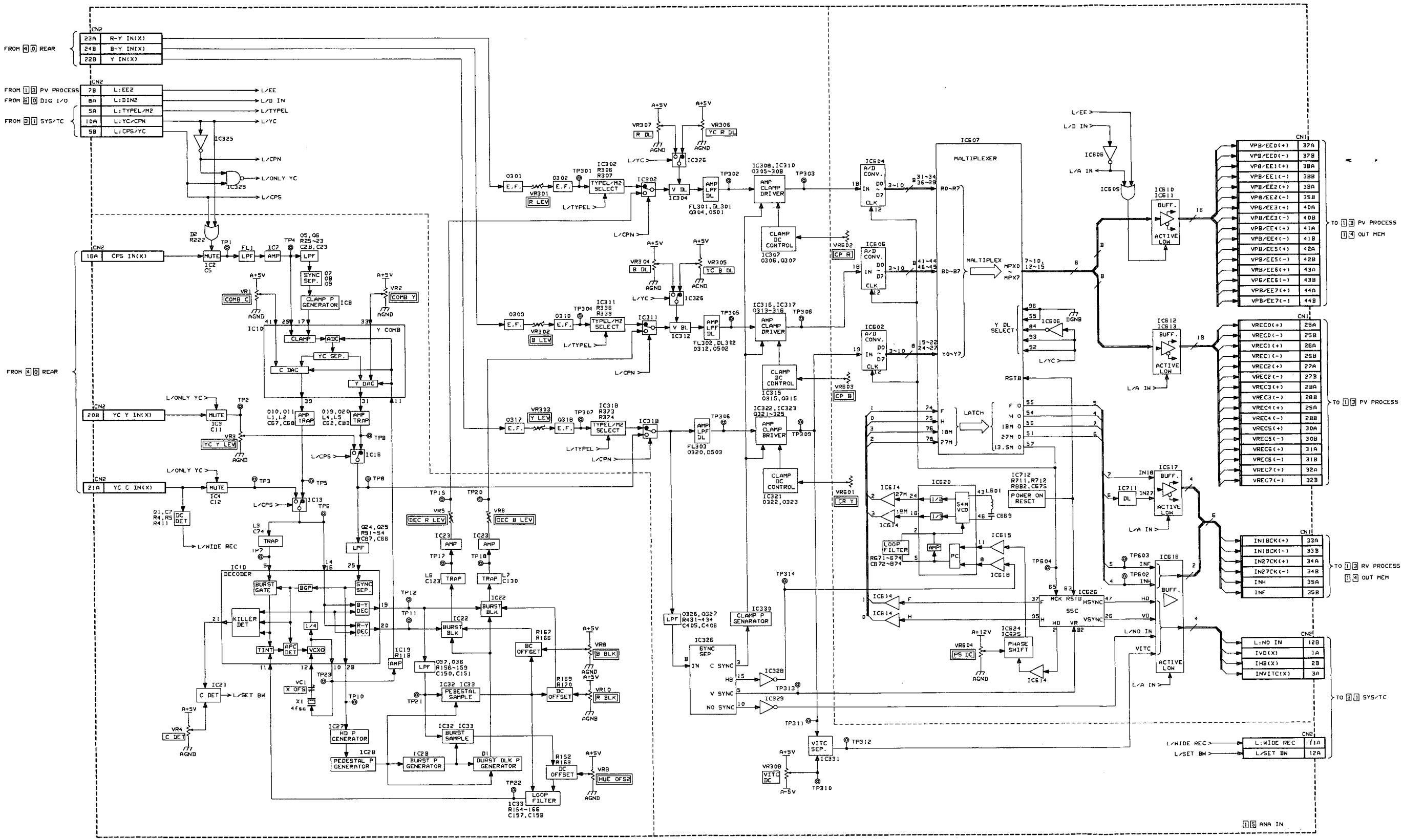

## 4.7 PV PRGCESS CIRCUIT BGARD BLGCK DIAGRAMS

### — DIAGRAM 1/4 —

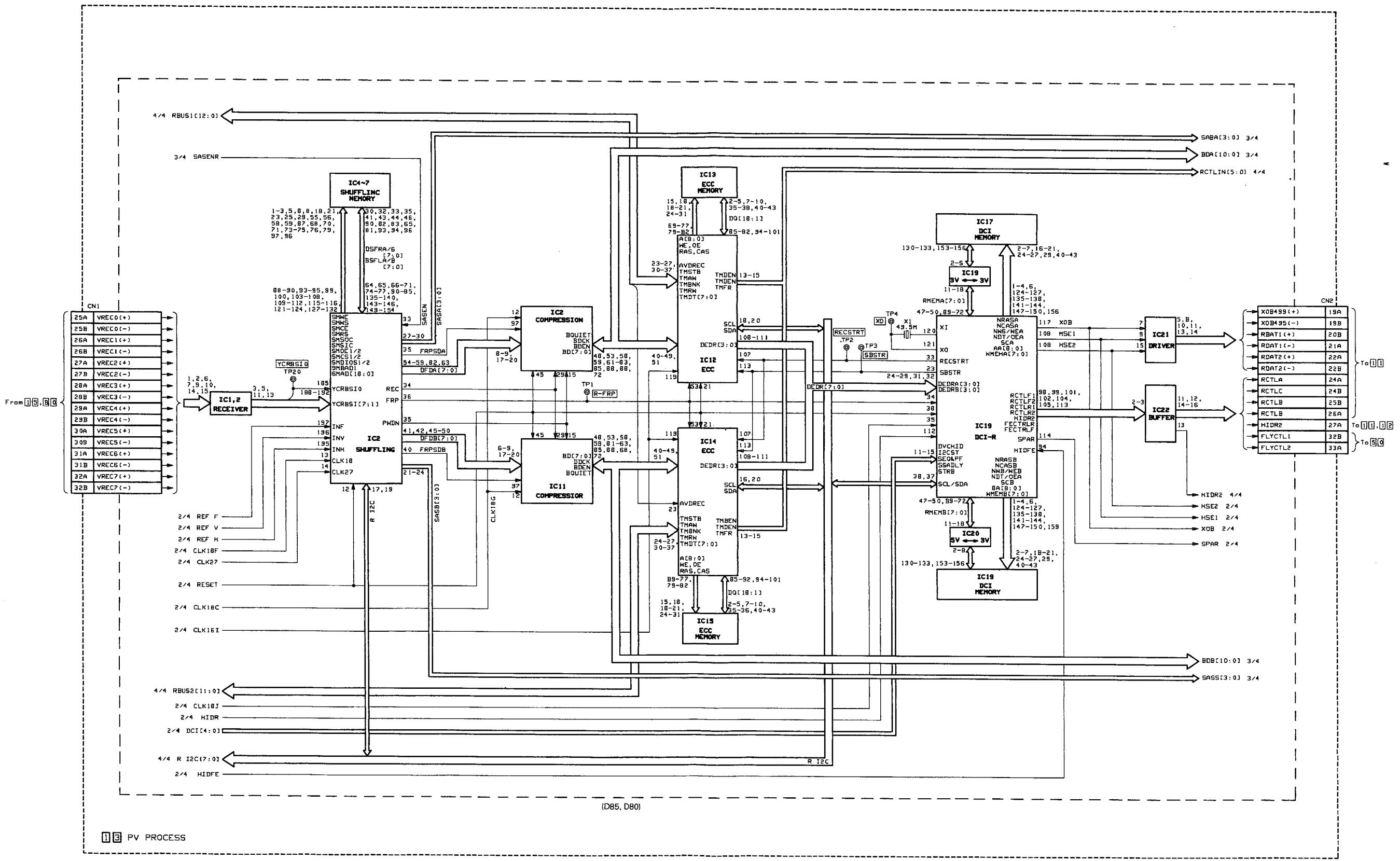


NOTE: 1[1] REC/ITI
1[2] RF PROCESSI
1[5] ANA IN
5[0] DECK TERM
6[0] DIG I/O

## — DIAGRAM 2/4 —

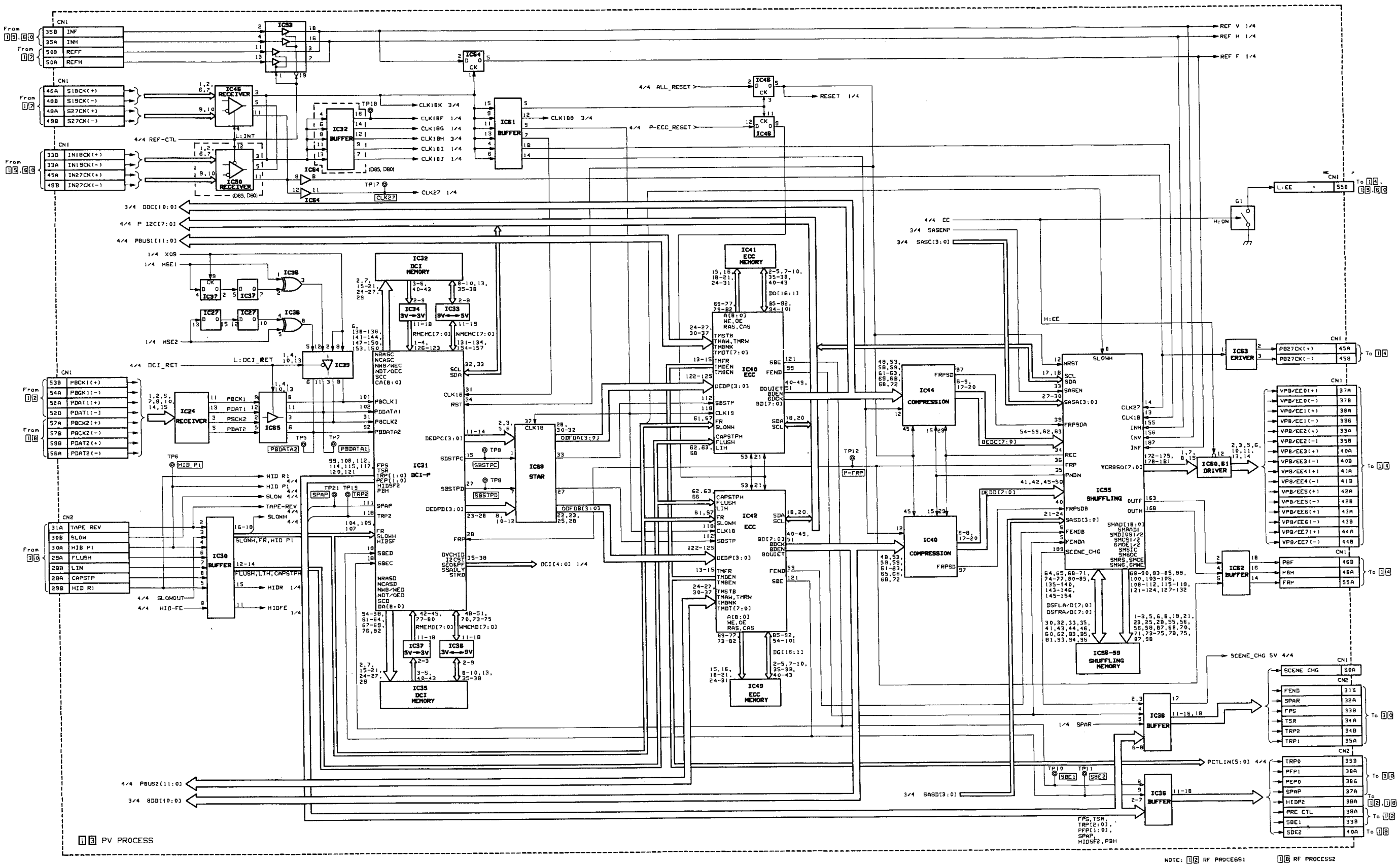




V E-V20471 / Druck 9

## — DIAGRAM 3/4 —

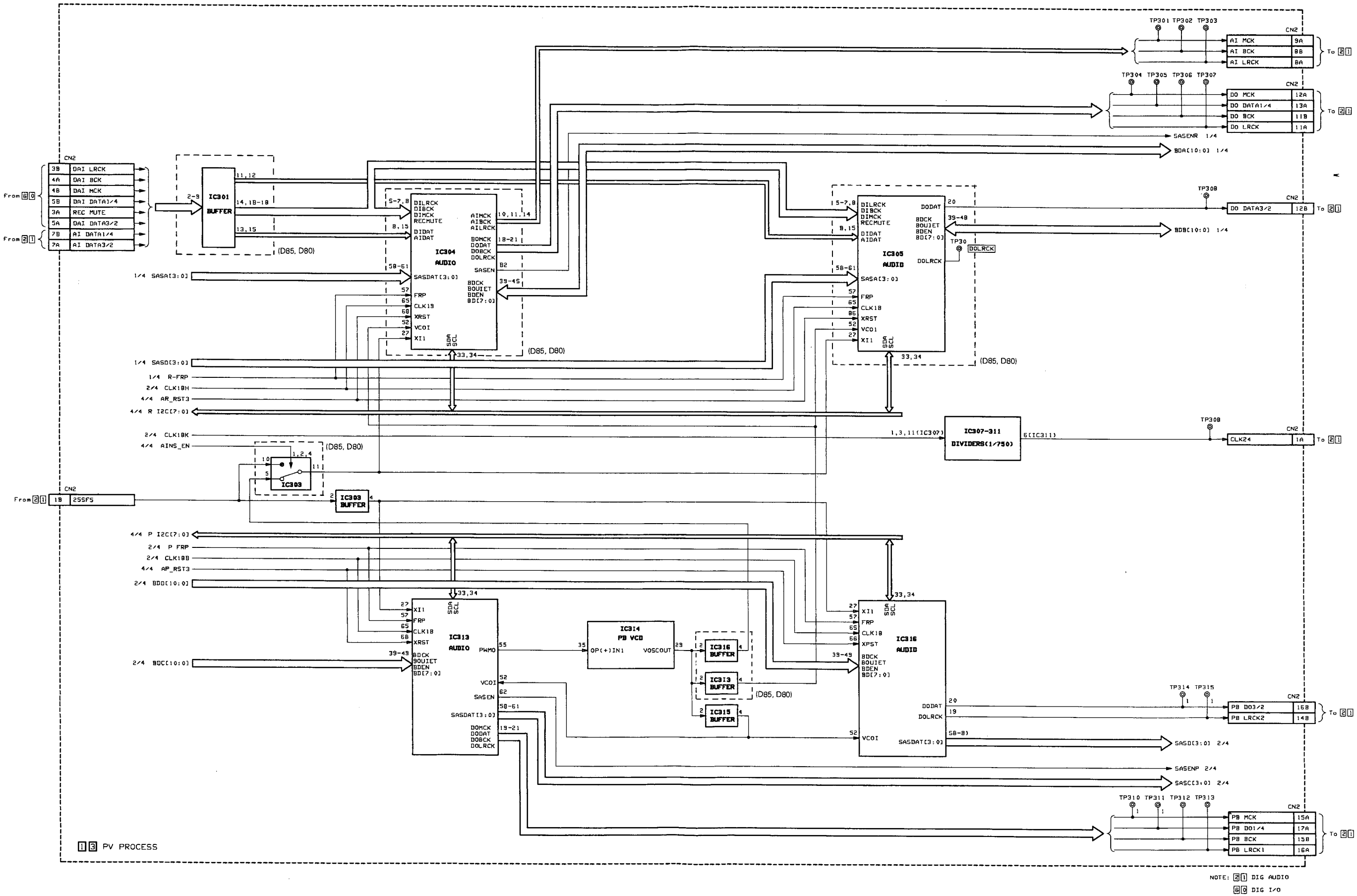


NOTE: 2 1 DIG AUDIO
6 0 DIG I/O

## — DIAGRAM 4/4 —

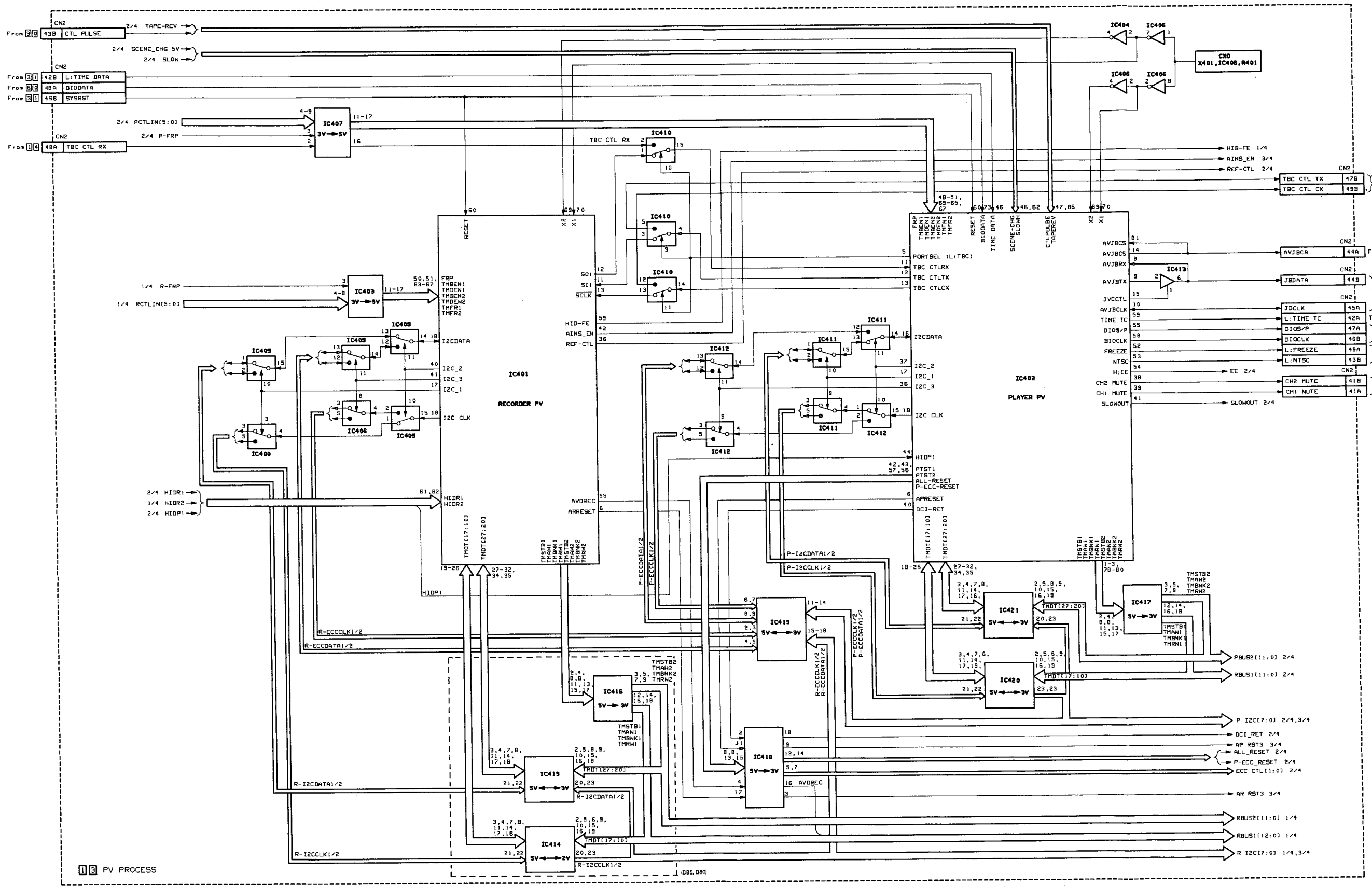


NOTE: 1B RF PROCESS1
1C OUT MEM
2I RF PROCESS2
3C MCTL/SV
3I SYSCON/TC
3Z OPERATION
6C DIG I/O

## 4.8 OUT MEM CIRCUIT BOARD BLOCK DIAGRAM

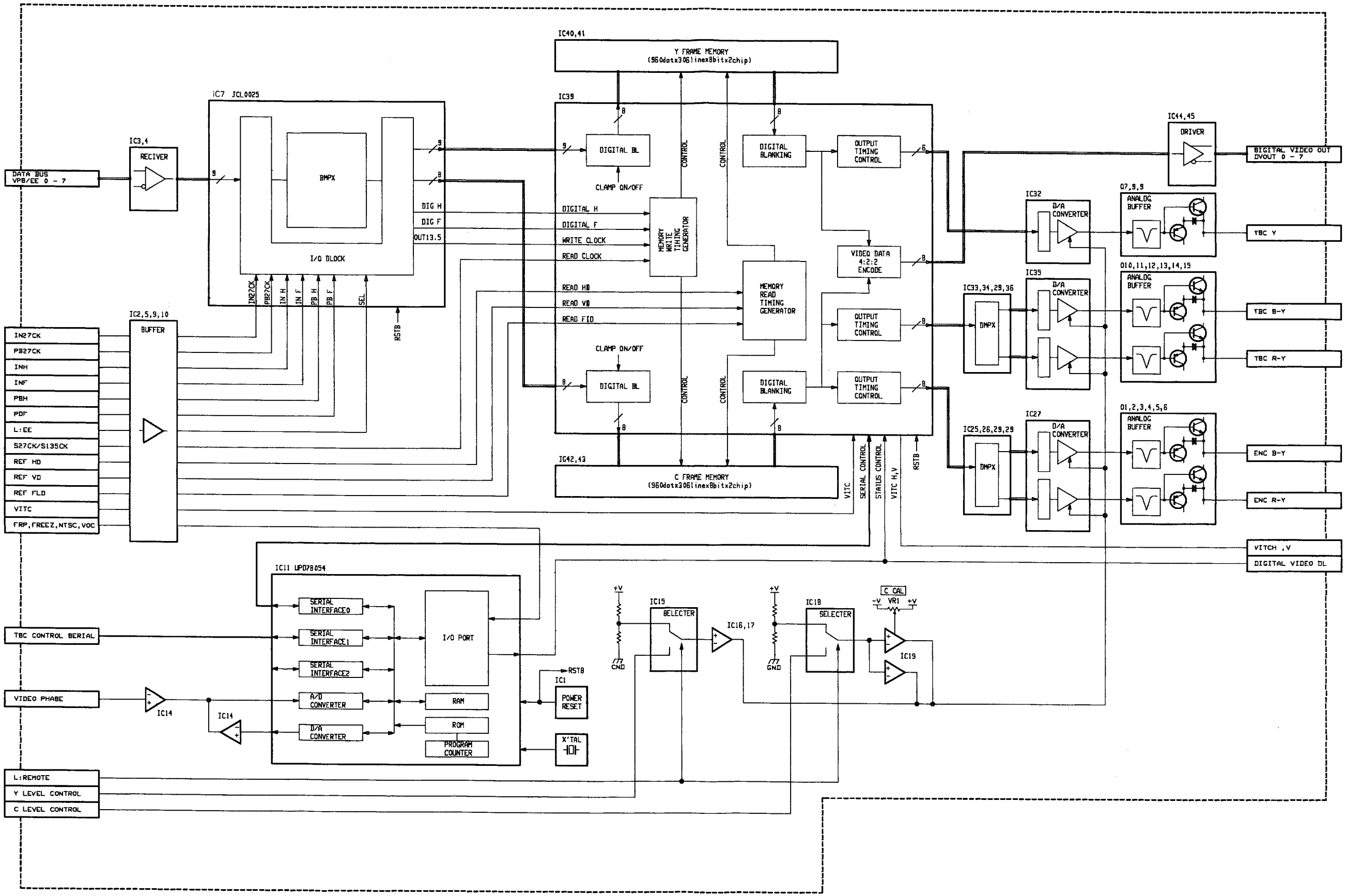

## 4.9 GUT GEN CIRCUIT BGARD BLGCK DIAGRAM

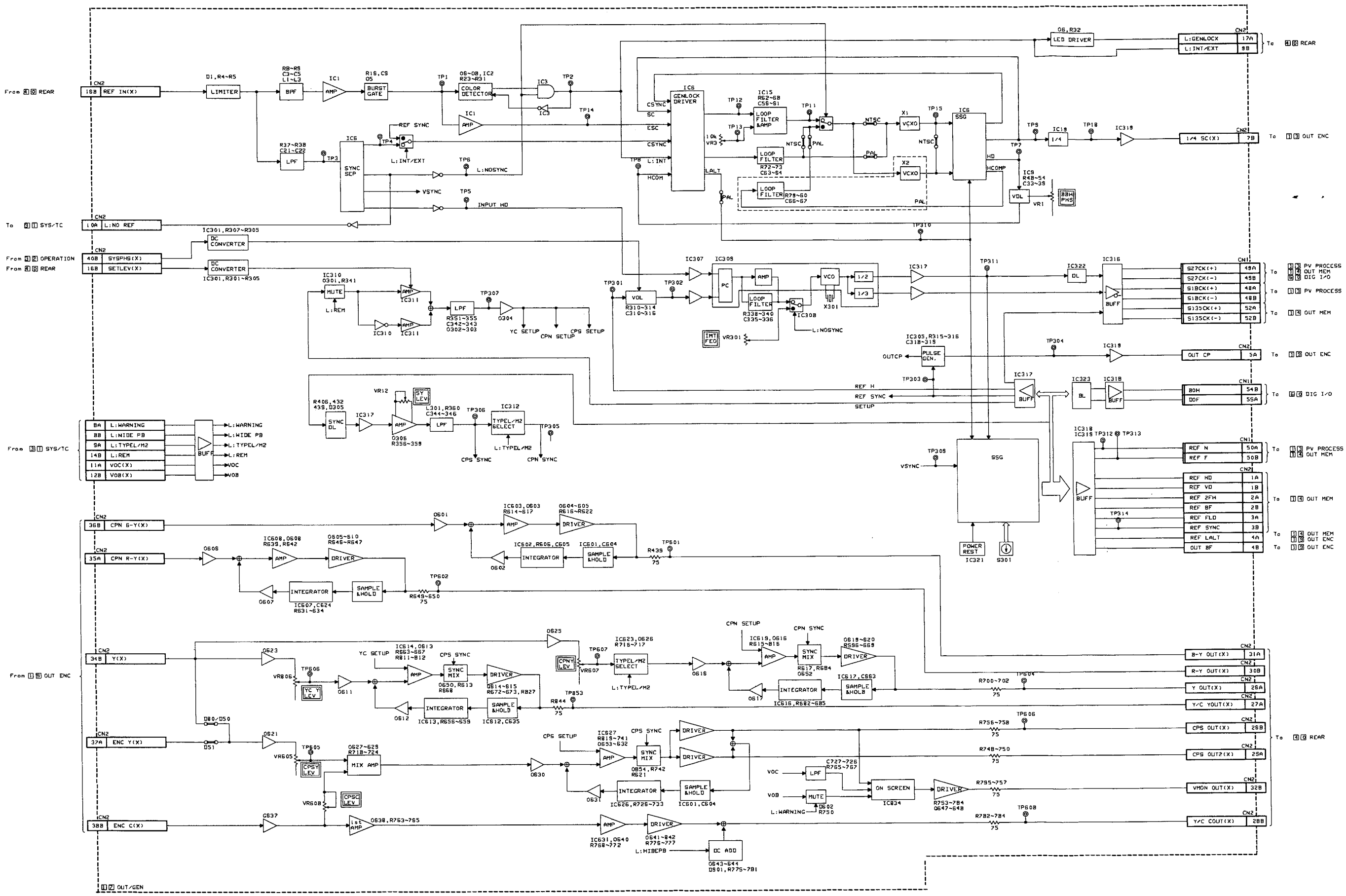




4-15

## 4.10 OUT ENC CIRCUIT BOARD BLOCK DIAGRAM

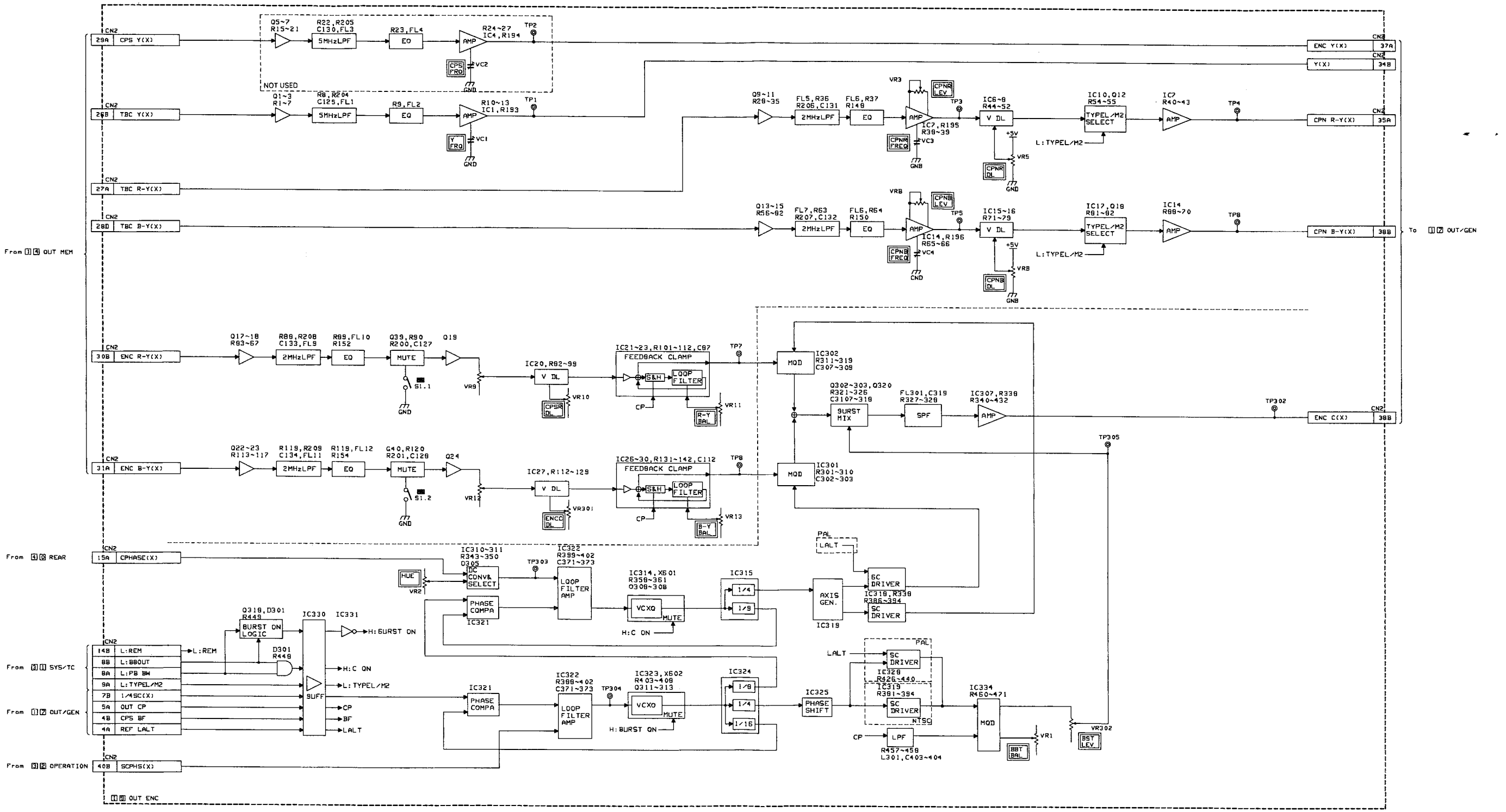

## 4.11 OPERATION CIRCUIT BOARD BLOCK DIAGRAM

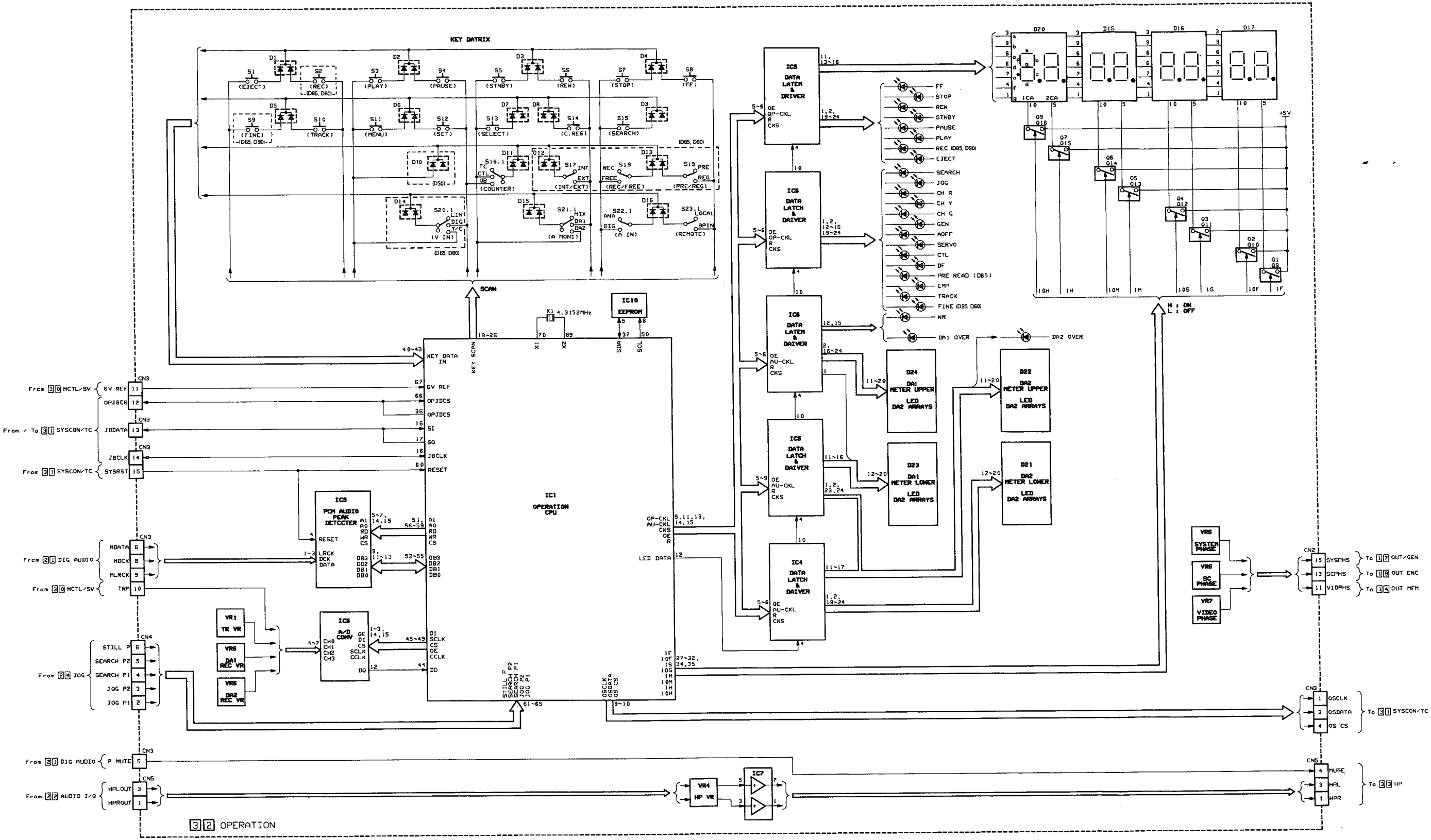

## 4.12 RF PROCESS CIRCUIT BLOCK DIAGRAMS

### 4.12.1 RF PROCESS-1 CIRCUIT BOARD BLGCK DIAGRAMS

**— DIAGRAM 1/2 —**

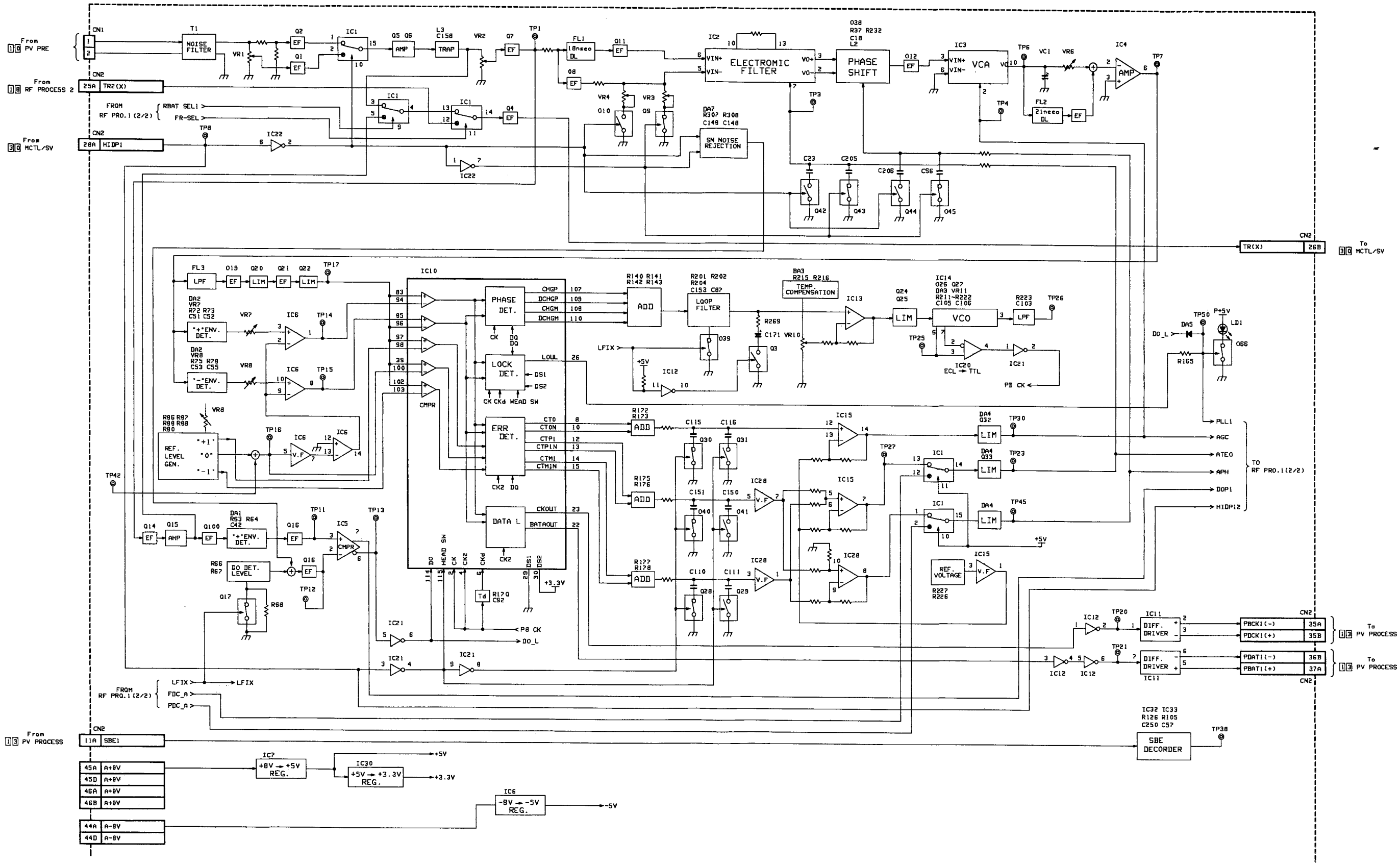

## — DIAGRAM 2/2 —

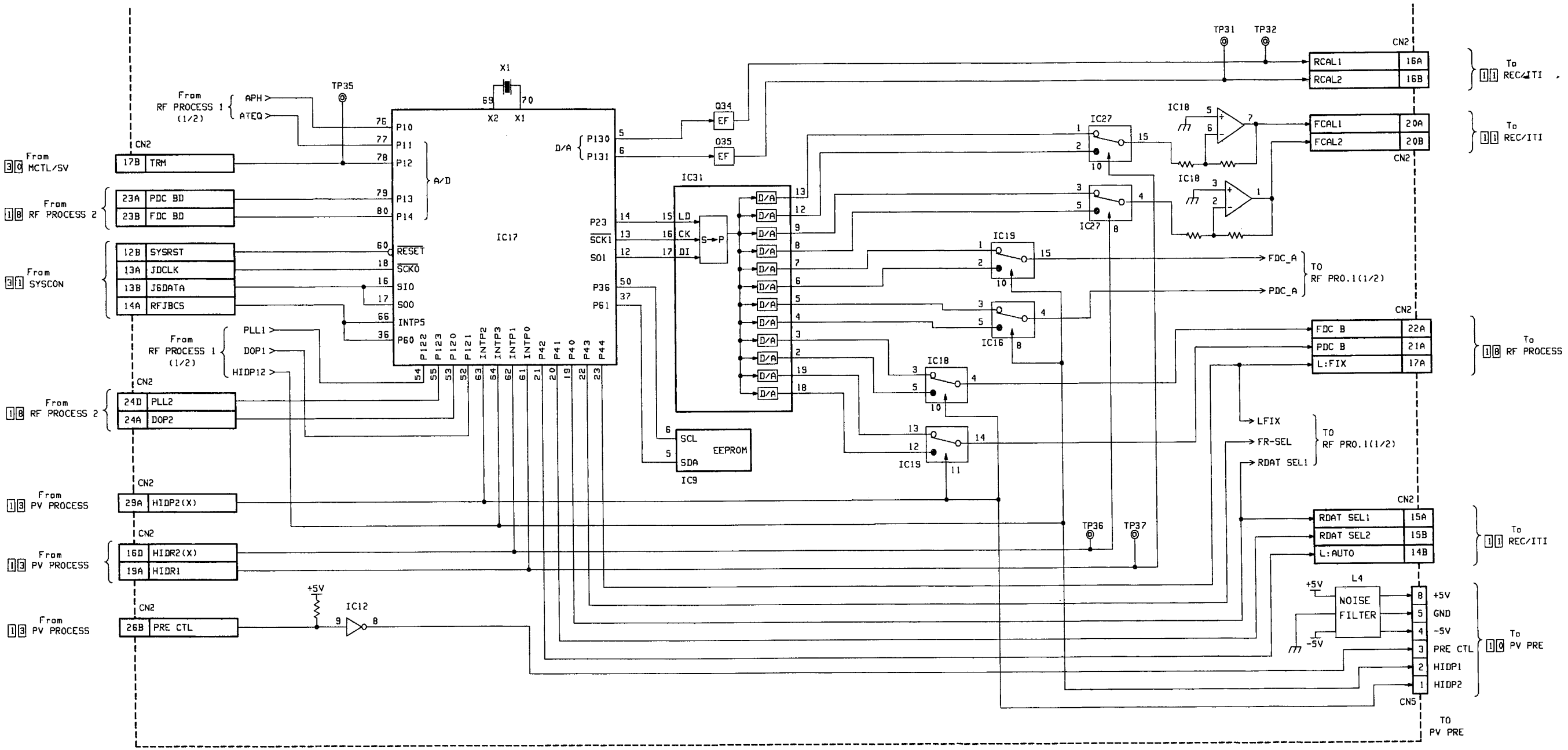

From RF PROCESS 1 (1/2)
APH
ATEQ
TP35
X1
X2
IC17
A/D
D/A
P10
P11
P12
P13
P14
RESET
SCK0
SI0
SO0
INTP5
P60
P122
P123
P120
P121
INTP2
INTP3
INTP1
INTP0
P42
P41
P40
P43
P44
P130
P131
P23
SCK1
SO1
P36
P61
Q34
Q35
EF
IC31
LD
CK
DI
S→P
IC9
SCL
SDA
EEPROM
From MCTL/SV
17B TRM
From RF PROCESS 2
23A PDC BD
23B FDC BD
From SYSCON
12B SYSRST
13A JDCLK
13B J6DATA
14A RFJBCS
From RF PROCESS 1 (1/2)
PLL1
DOP1
HIDP12
From RF PROCESS 2
24D PLL2
24A DOP2
From PV PROCESS
29A HIDP2(X)
From PV PROCESS
16D HIDR2(X)
19A HIDR1
From PV PROCESS
26B PRE CTL
+5V
IC12
TP31
TP32
TP36
TP37
IC27
IC18
IC19
IC16
RCAL1 16A
RCAL2 16B
To REC/ITI
FCAL1 20A
FCAL2 20B
FDC_A
PDC_A
TO RF PRO.1(1/2)
FDC B 22A
PDC B 21A
L:FIX 17A
To RF PROCESS 2
LFIX
FR-SEL
RDAT SEL1
RDAT SEL1 15A
RDAT SEL2 15B
L:AUTO 14B
L4
NOISE FILTER
+5V
GND
-5V
PRE CTL
HIDP1
HIDP2
CN5
To PV PRE

## 4.12.2 RF PROCESS-2 CIRCUIT BOARD RLOCK DIAGRAM

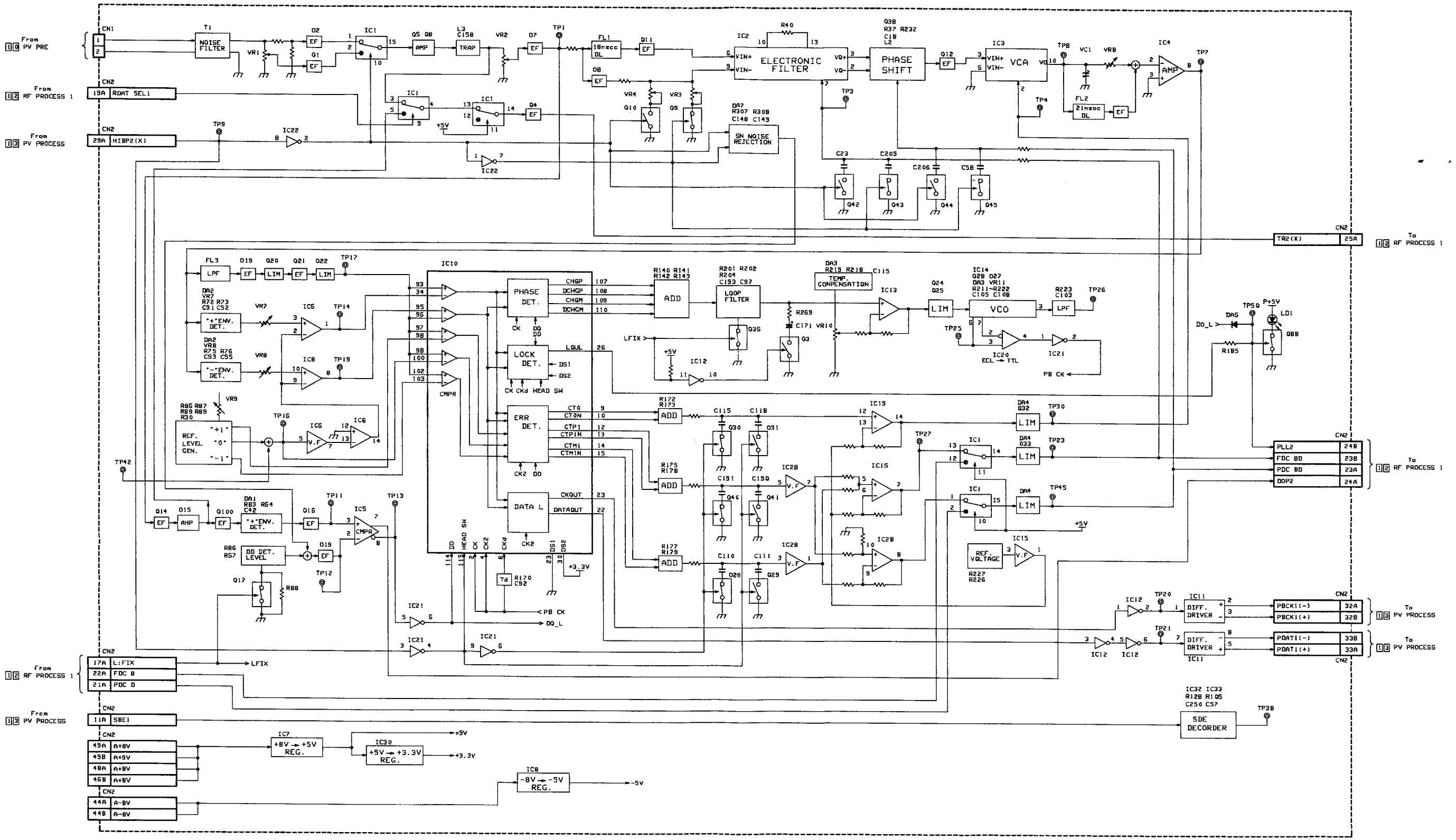

## 4.13 AUDIO CIRCUIT BLOCK DIAGRAMS

**— DIAGRAM 1/3 —**

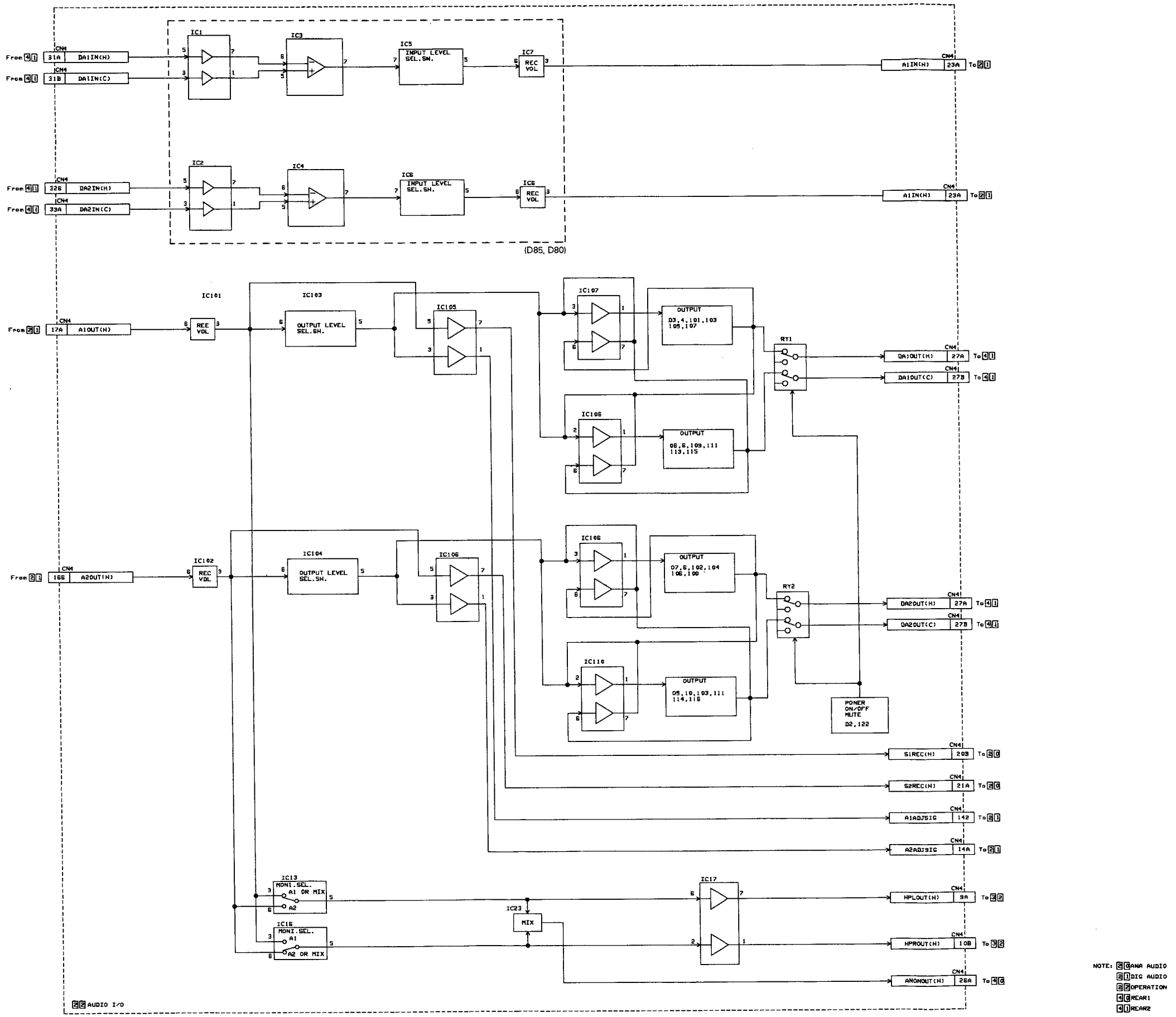

## — DIAGRAM 2/3 —

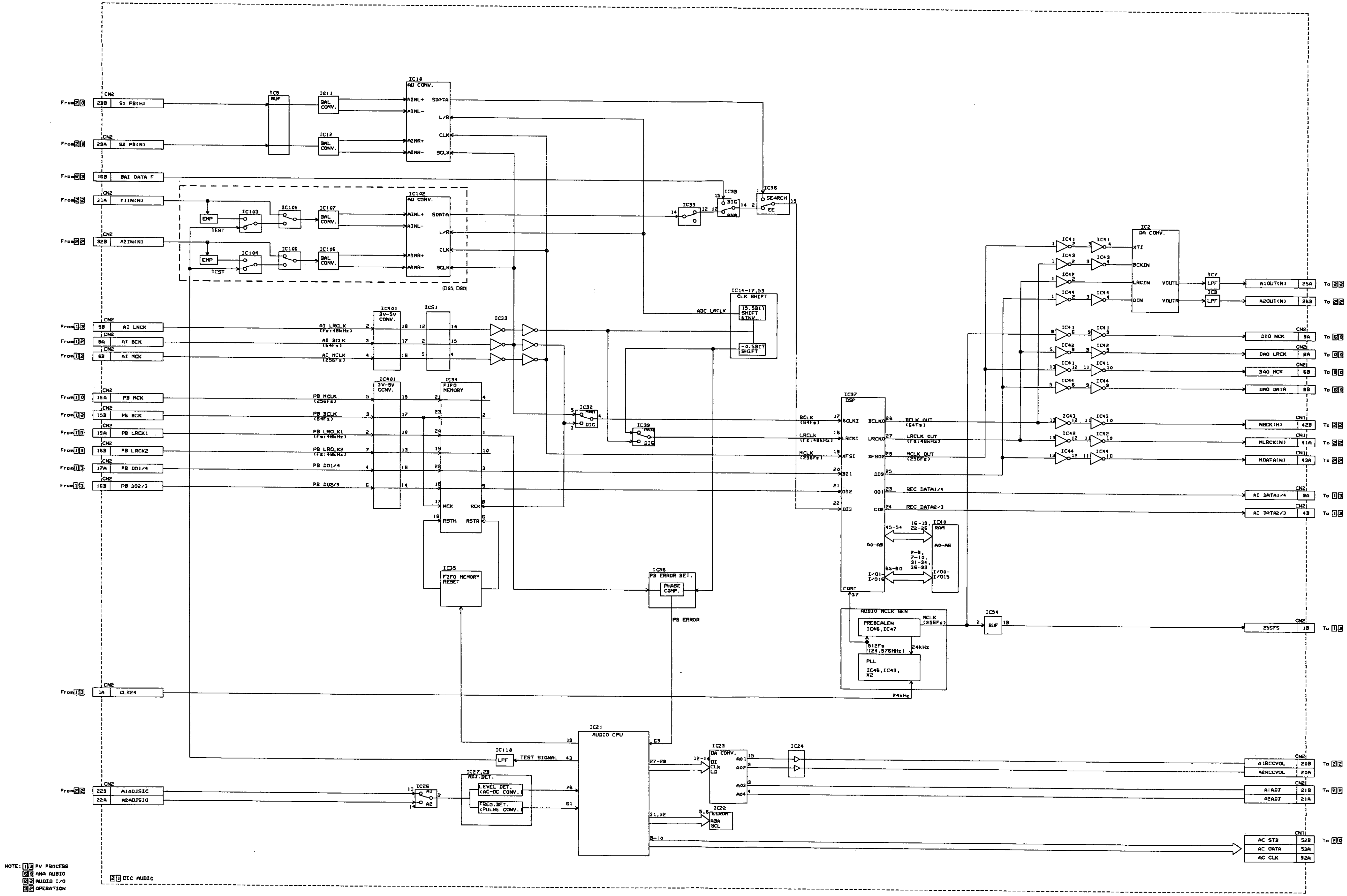




VIDE-V20471 / Druck 20

**— DIAGRAM 3/3 —**

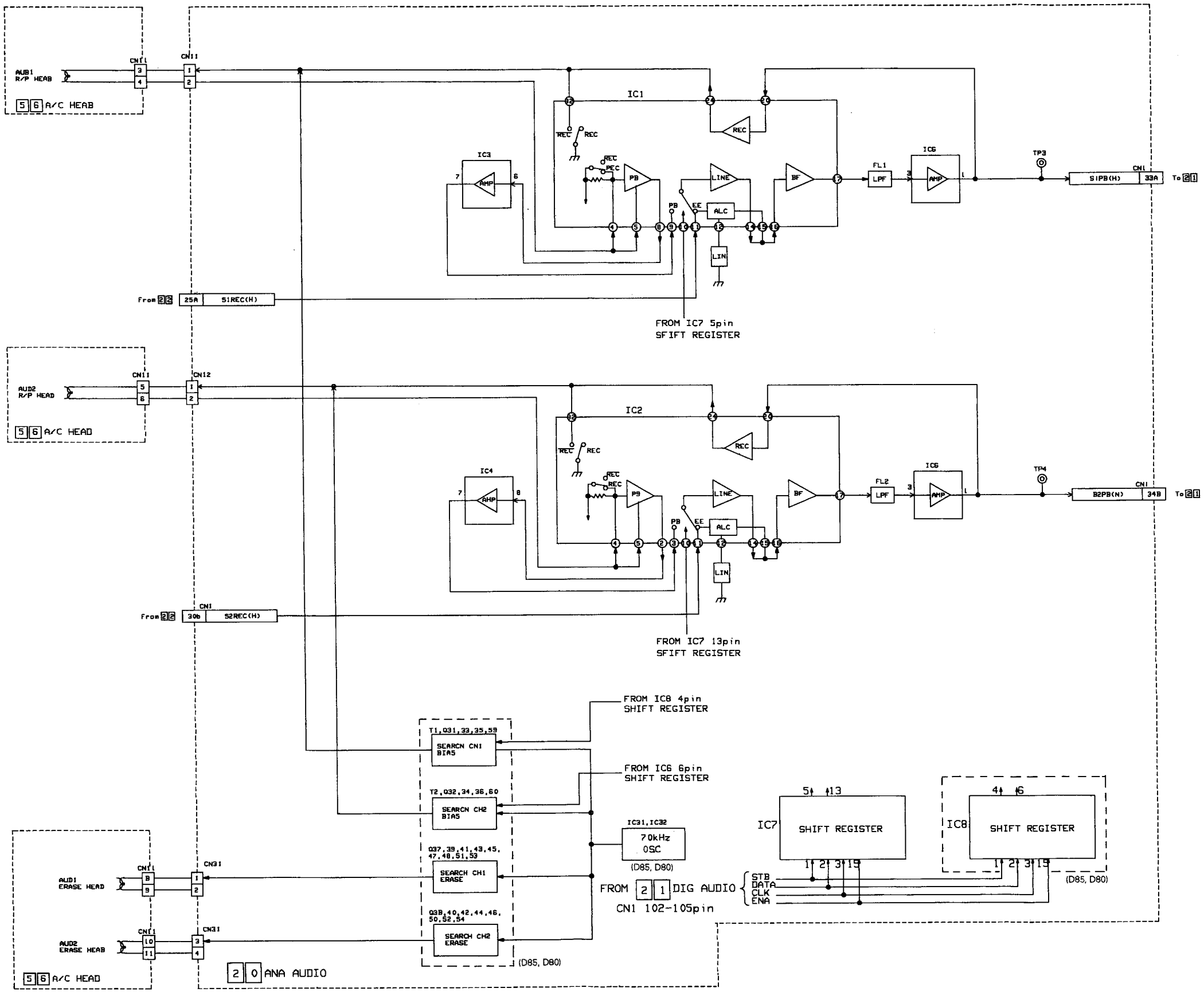



4-23

## 4.14 SYS/TC CIRCUIT BOARD BLOCK DIAGRAMS

### — DIAGRAM 1/2 —

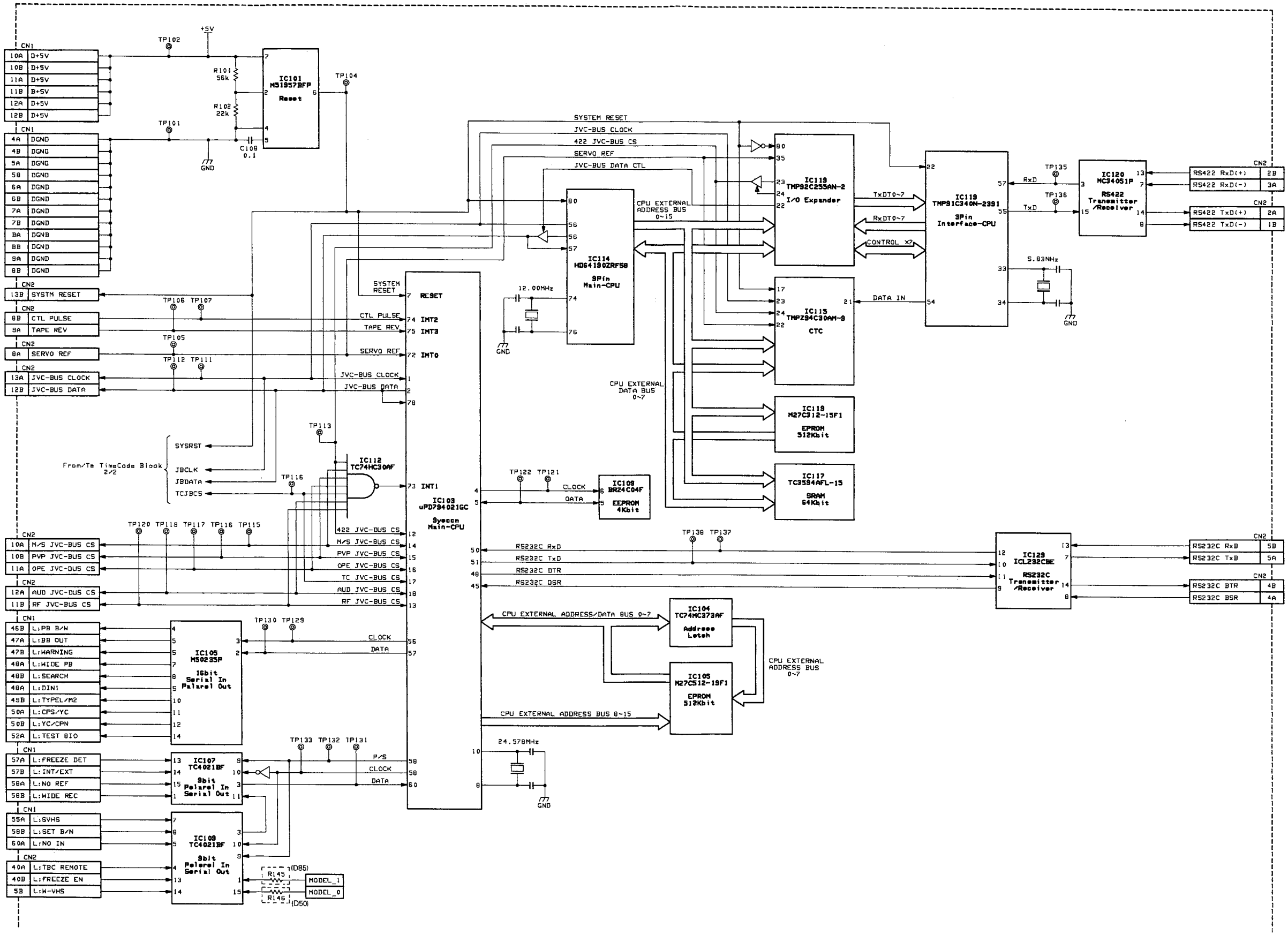




4-24

**— DIAGRAM 2/2 —**

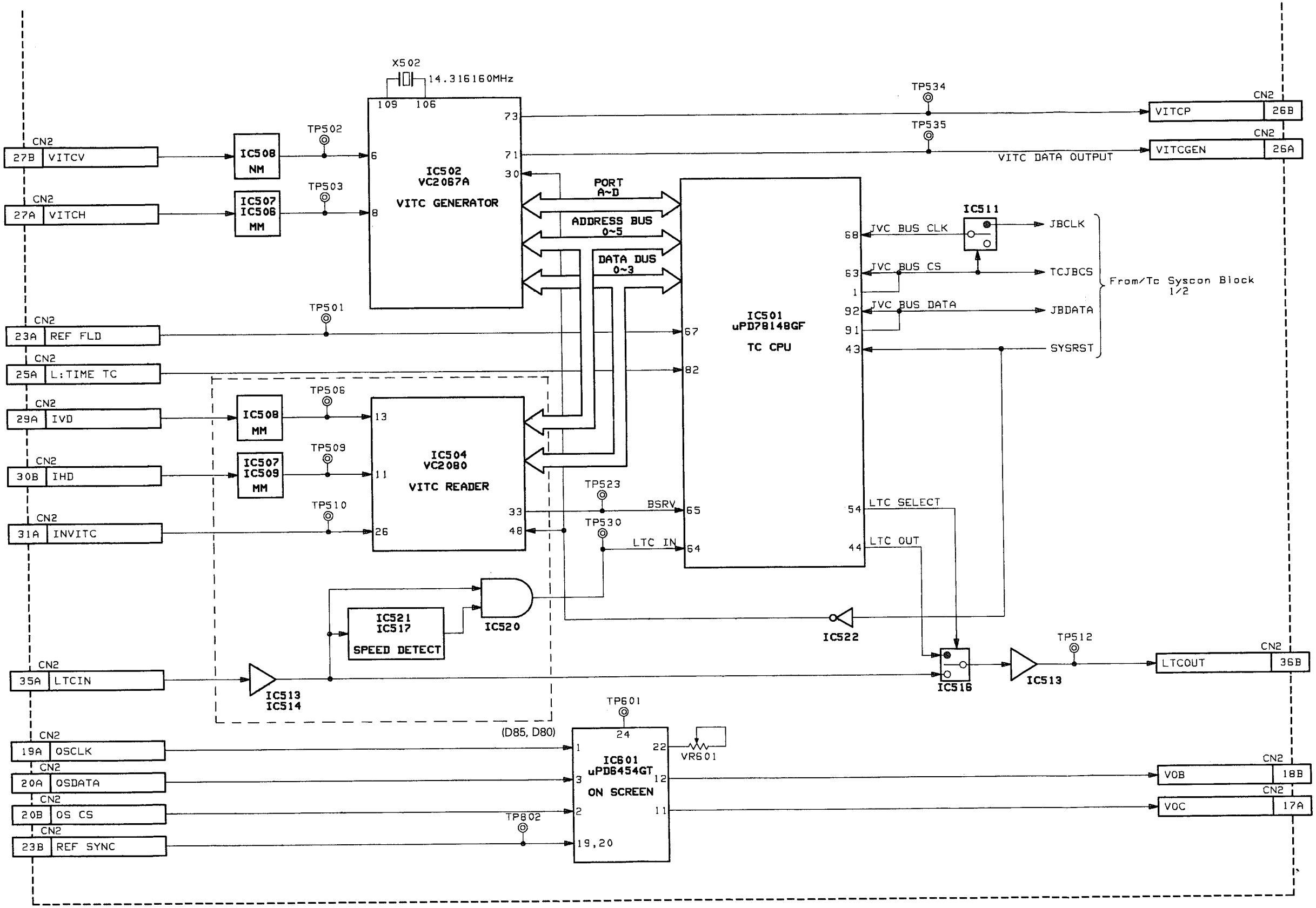



4-25

## 4.15. OVERALL WIRING DIAGRAMS

**— DIAGRAM 1/3 —**

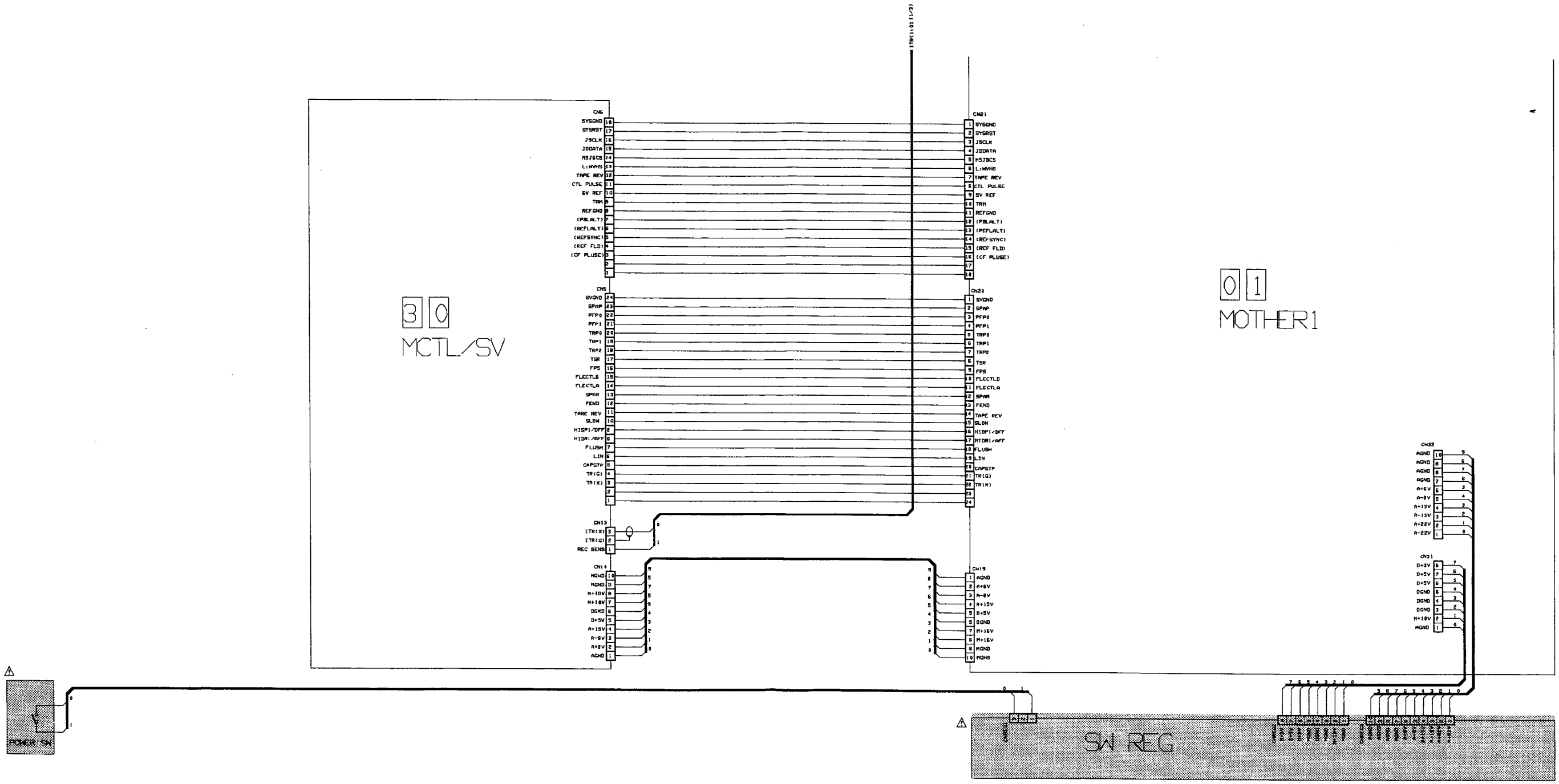

## ADDRESS TABLE OF BOARD PARTS

Each address may have an address error by one interval

Side — A-1C — Y axis / X axis

| | | | | | | | | | | | |
|---|---|---|---|---|---|---|---|---|---|---|---|
| IC1 | B- 9A | R28 | B- 6C | R98 | A- 9A | C20 | A- 6A | TP5 | B- 2C |
| IC2 | A- 7C | R29 | A- 6C | R99 | B- 9A | C21 | A- 6A | TP6 | B- 5C |
| IC3 | A- 8C | R30 | B- 6B | R100 | B- 8C | C22 | B- 7B | TP7 | B- 5A |
| IC4 | B- 8C | R31 | B- 6A | R101 | A- 8B | C23 | A- 4A | TP8 | B- 1B |
| IC5 | A- 7A | R32 | A- 5C | R102 | B- 7A | C24 | A- 4A | TP9 | B- 1A |
| IC6 | A- 6A | R33 | A- 5B | R103 | B- 2C | C25 | A- 4A | TP10 | B- 8B |
| IC7 | A- 7B | R34 | A- 5B | R201 | A- 3A | C26 | A- 5A | TP11 | B- 9A |
| IC8 | A- 5A | R35 | A- 5C | R202 | B- 3B | C27 | B- 3A | TP12 | B- 2B |
| IC9 | A- 6B | R36 | A- 5C | R203 | B- 3B | C28 | A- 5B | | |
| IC10 | A- 5B | R37 | A- 5C | R204 | B- 3A | C29 | A- 4B | S1 | B- 9B |
| IC11 | A- 4A | R38 | A- 5C | R205 | B- 3A | C30 | A- 4B | | |
| IC12 | A- 3B | R39 | B- 5B | R206 | B- 3B | C31 | A- 5C | CN2 | A- 1C |
| IC13 | A- 4C | R40 | B- 5B | R207 | B- 3B | C32 | A- 4B | | |
| IC14 | A- 3C | R41 | B- 5B | R208 | B- 3B | C33 | B- 5B | AN1 | A- 2A |
| IC15 | A- 6B | R42 | B- 5B | R209 | B- 3B | C34 | B- 4B | | |
| IC16 | A- 7B | R43 | B- 5C | R210 | A- 3C | C35 | B- 4B | X401 | A- 9C |
| IC17 | A- 6A | R44 | A- 5A | R211 | A- 2C | C36 | B- 3C | | |
| IC201 | A- 3B | R45 | A- 5A | R212 | A- 3B | C37 | A- 9C | | |
| IC301 | B- 2B | R46 | A- 5A | R213 | A- 3B | C38 | B- 4B | | |
| IC302 | B- 2A | R47 | B- 5A | R214 | B- 2B | C39 | A- 4C | | |
| IC401 | B- 9C | R48 | B- 5A | R215 | A- 3B | C40 | A- 5C | | |
| | | R49 | B- 6A | R216 | B- 3B | C41 | A- 4C | | |
| Q1 | A- 5A | R50 | B- 6A | R301 | B- 2B | C42 | A- 4C | | |
| Q2 | B- 5B | R51 | B- 6A | R302 | B- 2A | C43 | A- 2A | | |
| Q3 | A- 6A | R52 | B- 6A | R303 | B- 2A | C44 | A- 6C | | |
| Q4 | A- 4A | R53 | B- 5B | R304 | B- 1C | C45 | A- 2B | | |
| Q5 | A- 4B | R54 | B- 5B | R305 | A- 8B | C46 | A- 2C | | |
| Q6 | B- 5C | R55 | B- 5B | R306 | A- 8A | C47 | A- 3B | | |
| Q7 | B- 3B | R56 | B- 8B | R307 | B- 7A | C48 | B- 7B | | |
| Q8 | B- 4C | R57 | B- 5B | R308 | A- 6A | C49 | B- 6B | | |
| Q9 | B- 3C | R58 | B- 5A | R309 | B- 2C | C50 | A- 5B | | |
| Q201 | B- 3A | R59 | A- 6B | R401 | A- 8A | C51 | B- 6B | | |
| Q202 | B- 3B | R60 | A- 6A | R402 | A- 8A | C52 | A- 8A | | |
| Q203 | A- 3B | R61 | A- 6A | R403 | A- 8A | C53 | A- 5A | | |
| | | R62 | B- 5B | R404 | A- 9B | C54 | B- 7B | | |
| D1 | B- 4C | R63 | A- 5B | R405 | B- 9C | C55 | A- 4C | | |
| D201 | B- 3B | R64 | A- 5B | R406 | A- 9B | C201 | A- 3A | | |
| | | R65 | A- 6A | | | C202 | B- 3A | | |
| R1 | B- 7C | R66 | A- 4A | VR1 | B- 6A | C203 | B- 2B | | |
| R2 | B- 7C | R67 | A- 4A | VR2 | B- 4C | C301 | B- 2A | | |
| R3 | B- 7C | R68 | A- 3A | VR3 | B- 5A | C302 | B- 2B | | |
| R4 | B- 7C | R69 | B- 3B | VR4 | B- 5C | C303 | B- 2A | | |
| R5 | B- 7C | R70 | A- 4A | VR5 | B- 4A | C304 | B- 2C | | |
| R6 | B- 7C | R71 | A- 5B | VR6 | B- 4A | C401 | A- 8A | | |
| R7 | B- 7C | R73 | A- 3A | VR201 | B- 3A | C402 | A- 8A | | |
| R8 | B- 7C | R74 | A- 3A | | | C403 | A- 9A | | |
| R9 | B- 7C | R75 | A- 3A | C1 | A- 7C | C404 | B- 9C | | |
| R10 | A- 8B | R76 | A- 4A | C2 | B- 7A | C405 | B- 9C | | |
| R11 | B- 7B | R78 | B- 5C | C3 | A- 6A | C406 | A- 9C | | |
| R12 | B- 7B | R80 | B- 5C | C4 | B- 6B | C407 | A- 9C | | |
| R13 | B- 7B | R81 | B- 4C | C5 | B- 6B | | | | |
| R14 | A- 7A | R82 | B- 3B | C6 | B- 6B | VC401 | B- 9C | | |
| R15 | A- 6A | R83 | A- 6A | C7 | B- 6C | | | | |
| R16 | A- 7A | R84 | B- 3B | C8 | B- 6A | L1 | B- 4B | | |
| R17 | B- 6B | R85 | B- 2C | C9 | A- 5A | L2 | B- 4B | | |
| R18 | B- 6B | R86 | A- 4B | C10 | B- 7A | L3 | B- 4C | | |
| R19 | B- 6B | R87 | B- 3B | C11 | A- 3C | L401 | B- 9C | | |
| R20 | A- 7A | R88 | A- 4C | C12 | B- 5B | | | | |
| R21 | B- 6B | R89 | A- 4C | C13 | A- 5A | DL1 | A- 6C | | |
| R22 | B- 6B | R90 | A- 5C | C14 | A- 5A | DL2 | A- 6C | | |
| R23 | B- 6B | R91 | B- 1C | C15 | A- 5A | | | | |
| R24 | B- 6B | R92 | B- 1A | C16 | B- 5B | TP1 | B- 7B | | |
| R25 | B- 6B | R93 | B- 7B | C17 | A- 5B | TP2 | B- 7B | | |
| R26 | B- 6C | R94 | B- 1A | C18 | A- 3B | TP3 | B- 7C | | |
| R27 | B- 6C | R97 | B- 1A | C19 | A- 6A | TP4 | B- 6A | | |

– Side A –

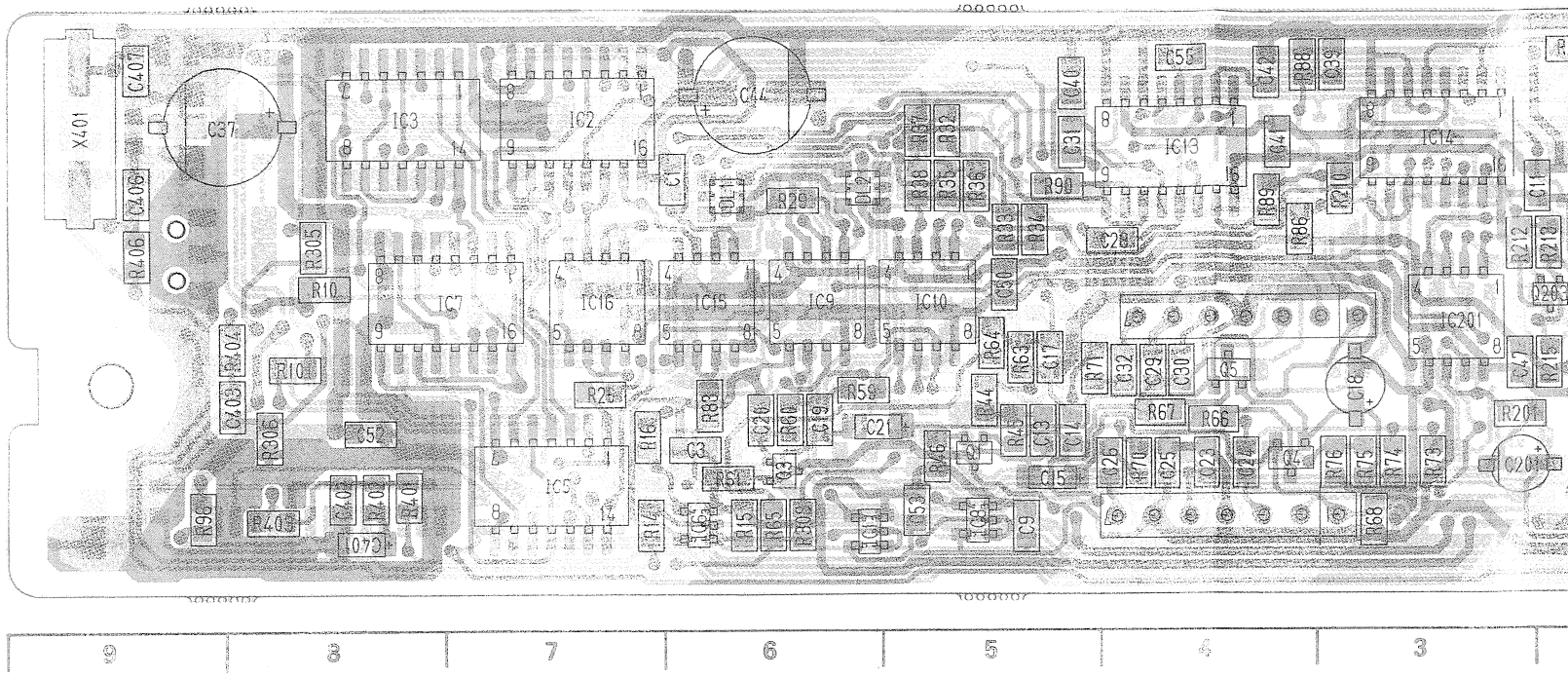


– Side B –

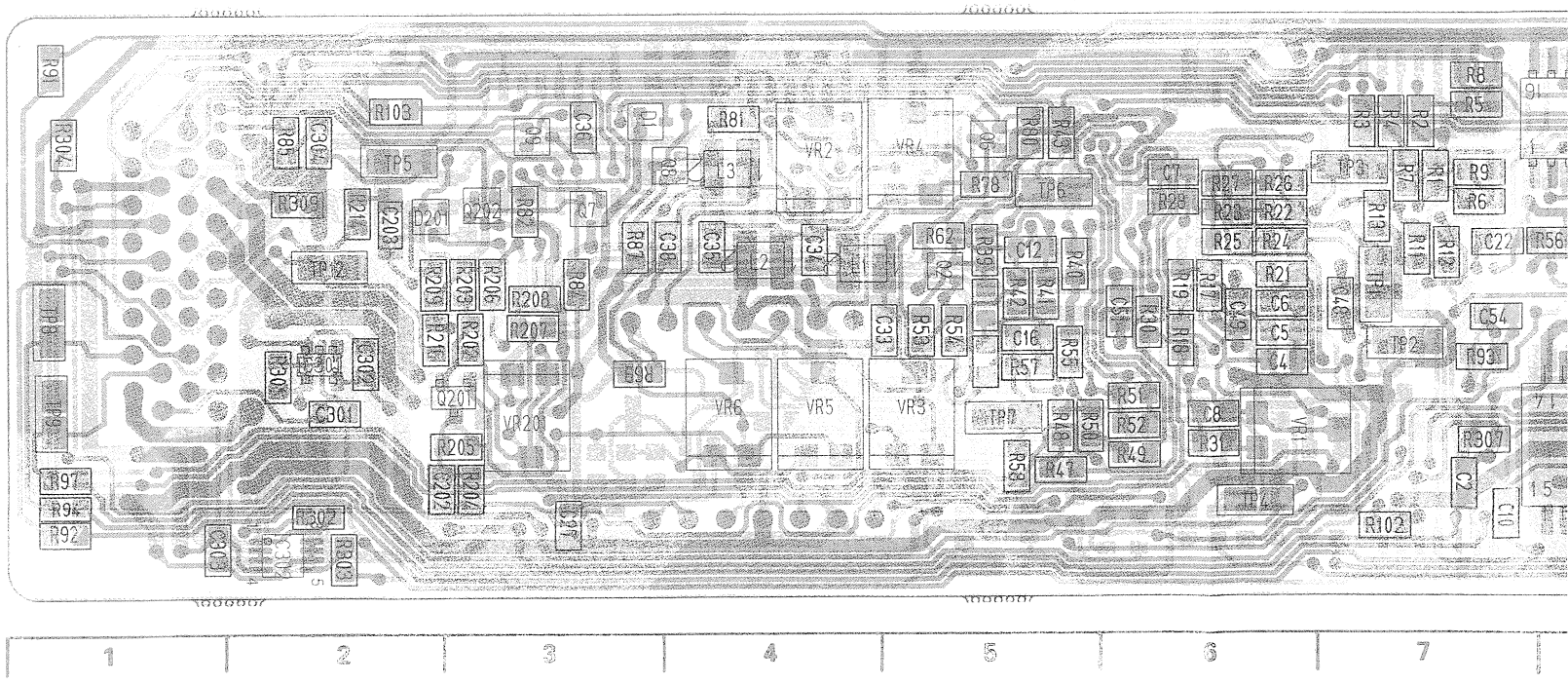



4-25

**RTS**
one interval.

| | | | | | |
|---|---|---|---|---|---|
| 9A | C20 | A- 6A | TP5 | B- 2C | |
| 9A | C21 | A- 6A | TP6 | B- 5C | |
| 8C | C22 | B- 7B | TP7 | B- 5A | |
| 8B | C23 | A- 4A | TP8 | B- 1B | |
| 7A | C24 | A- 4A | TP9 | B- 1A | |
| 2C | C25 | A- 4A | TP10 | B- 8B | |
| 8A | C26 | A- 5A | TP11 | B- 9A | |
| 8B | C27 | B- 3A | TP12 | B- 2B | |
| 8B | C28 | A- 5B | | | |
| 8A | C29 | A- 4B | S1 | B- 9B | |
| 8A | C30 | A- 4B | | | |
| 8B | C31 | A- 5C | CN2 | A- 1C | |
| 8B | C32 | A- 4B | | | |
| 8B | C33 | B- 5B | AN1 | A- 2A | |
| 8B | C34 | B- 4B | | | |
| 8C | C35 | B- 4B | X401 | A- 9C | |
| 2C | C36 | B- 3C | | | |
| 8B | C37 | A- 9C | | | |
| 8B | C38 | B- 4B | | | |
| 2B | C39 | A- 4C | | | |
| 8B | C40 | A- 5C | | | |
| 8B | C41 | A- 4C | | | |
| 2B | C42 | A- 4C | | | |
| 2A | C43 | A- 2A | | | |
| 2A | C44 | A- 6C | | | |
| 1C | C45 | A- 2B | | | |
| 8B | C46 | A- 2C | | | |
| 8A | C47 | A- 3B | | | |
| 7A | C48 | B- 7B | | | |
| 8A | C49 | B- 6B | | | |
| 2C | C50 | A- 5B | | | |
| 8A | C51 | B- 6B | | | |
| 8A | C52 | A- 8A | | | |
| 8A | C53 | A- 5A | | | |
| 8B | C54 | B- 7B | | | |
| 9C | C55 | A- 4C | | | |
| 8B | C201 | A- 3A | | | |
| | C202 | B- 3A | | | |
| 8A | C203 | B- 2B | | | |
| 8C | C301 | B- 2A | | | |
| 8A | C302 | B- 2B | | | |
| 8C | C303 | B- 2A | | | |
| 8A | C304 | B- 2C | | | |
| 8A | C401 | A- 8A | | | |
| 8A | C402 | A- 8A | | | |
| | C403 | A- 9A | | | |
| 8C | C404 | B- 9C | | | |
| 8A | C405 | B- 9C | | | |
| 8A | C406 | A- 9C | | | |
| 8B | C407 | A- 9C | | | |
| 8B | | | | | |
| 8B | VC401 | B- 9C | | | |
| 8C | | | | | |
| 8A | L1 | B- 4B | | | |
| 8A | L2 | B- 4B | | | |
| 8A | L3 | B- 4C | | | |
| 8C | L401 | B- 9C | | | |
| 8B | | | | | |
| 8A | DL1 | A- 6C | | | |
| 8A | DL2 | A- 6C | | | |
| 8A | | | | | |
| 8B | TP1 | B- 7B | | | |
| 8B | TP2 | B- 7B | | | |
| 8B | TP3 | B- 7C | | | |
| 8A | TP4 | B- 6A | | | |

**– Side A –**

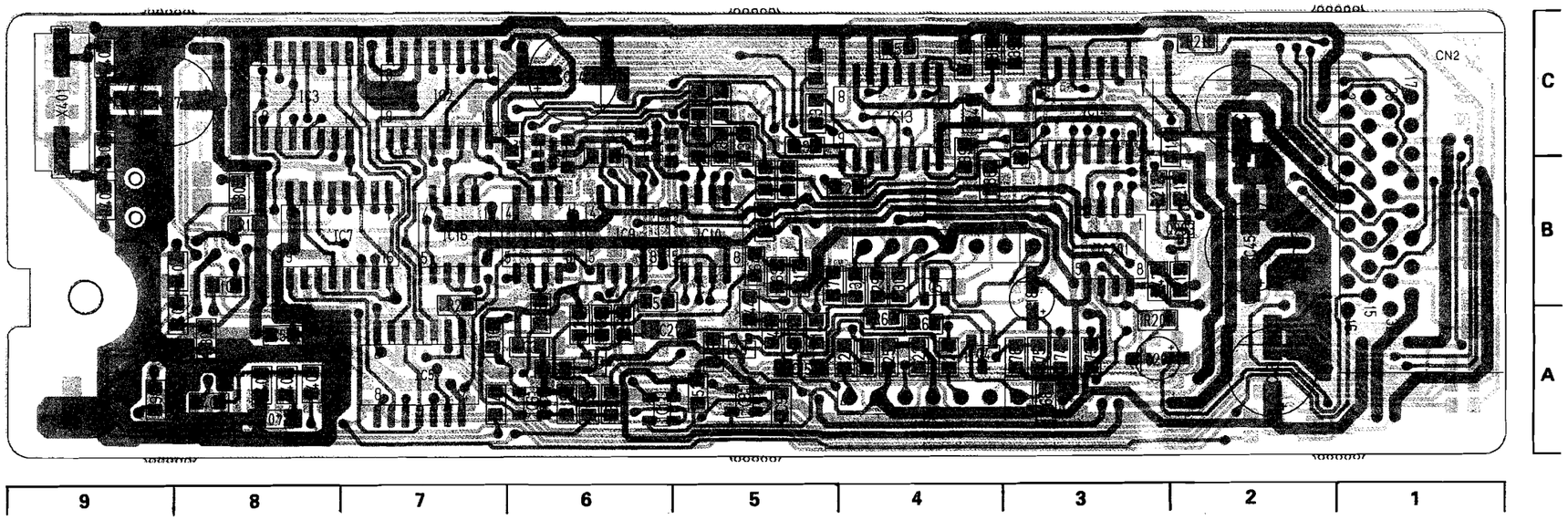


**– Side B –**

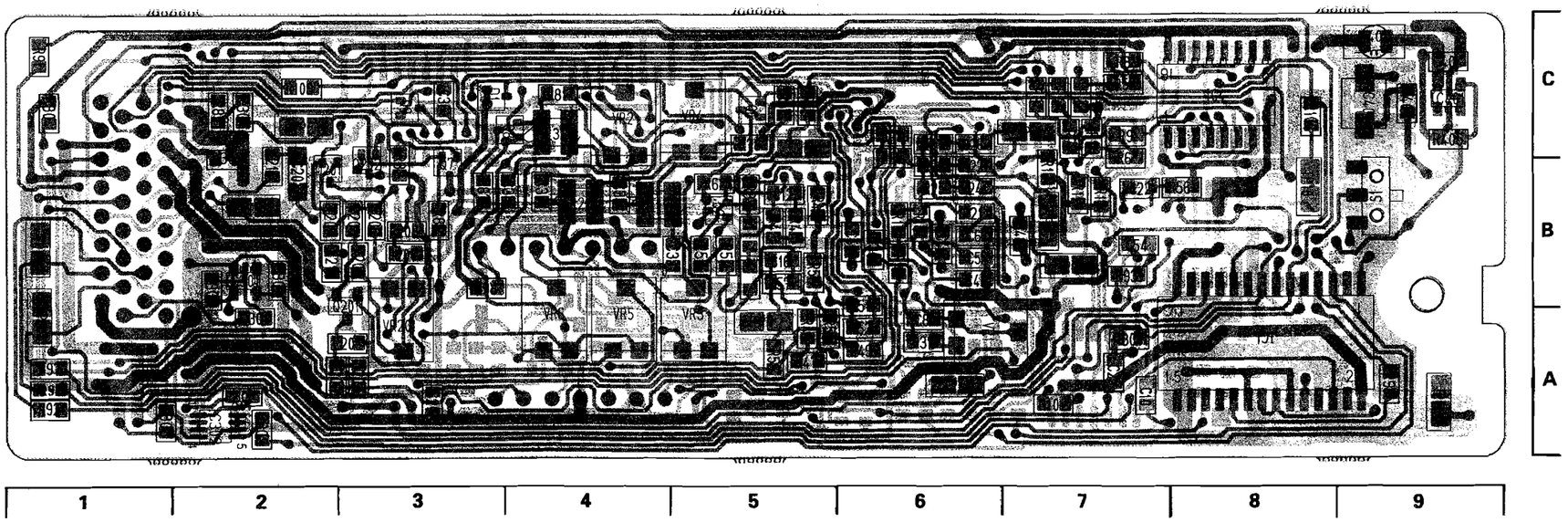



4-25

# 4.24N VIDEO BOARD SCHEMATIC DIAGRAM (NTSC) (1/2) 09

**TP1**

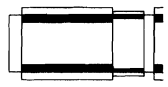

V-rate
PB 0.12 Vp-p

**TP22**

4 V-DC

**TP6**

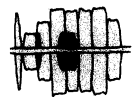

H-rate
PB 0.8 Vp-p

**TP5**

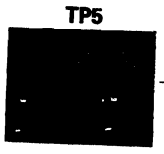

H-rate
REC 1.2 Vp-p

H-rate
PB 1.0 Vp-p

**TP7**

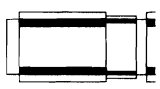

V-rate
REC 0.25 Vp-p

NOTE: PARTS WITH * MARK ARE OPEN CIRCUITS.

91132

**Revised in Feb. 1996.**

| N | A | B | C | D | E | F |
|---|---|---|---|---|---|---|

**TP2**
DC 2.5V

**TP3**
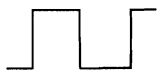
5 Vp-p, 30 Hz

**TP10**

H-rate
REC 0.6 Vp-p

**TP11**
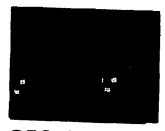
REC 0.65 Vp-p

**TP13**

H-rate
REC 1.64 Vp-p

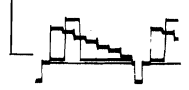
H-rate
PB 0.12 Vp-p

EE/CAM
PB(H)
SW 9V
SW 5V
PB 5V
REC 5V
COL.ROT
DG Y
UNCORR
SEARCH(H)
3.58M
S(H)
RESO
DOC Y
REC C OUT
REC C IN
C OUT
BLANK P
PB C629
FM

To Page 2

**TP12**
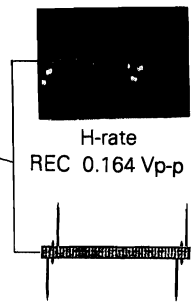
H-rate
REC 0.164 Vp-p

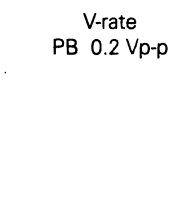
V-rate
PB 0.2 Vp-p

**TP9**
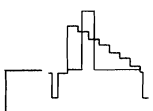
H-rate
PB 0.35 Vp-p

H-rate
REC 0.4 Vp-p

**TP8**
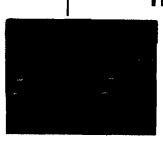
H-rate
REC 0.3 Vp-p

H-rate
PB 0.3 Vp-p

VR22 S PB Y LEV
VR23 N PB Y LEV
VR13 N CAR
VR15 S CAR
VR14 N DEV
VR16 S DEV
VR17 S W CLIP
VR18 N W CLIP
VR19 S D CLIP
VR20 N D CLIP
VR21 AGC LEV
VR11 REC PROCESS IN LEV
VR12 REC PROCESS OUT LEV

| G | H | I | J | K | L |
|---|---|---|---|---|---|
| 4-26N | 4-26N | | | | |

## EMATIC DIAGRAM (NTSC) (2/2) – 09

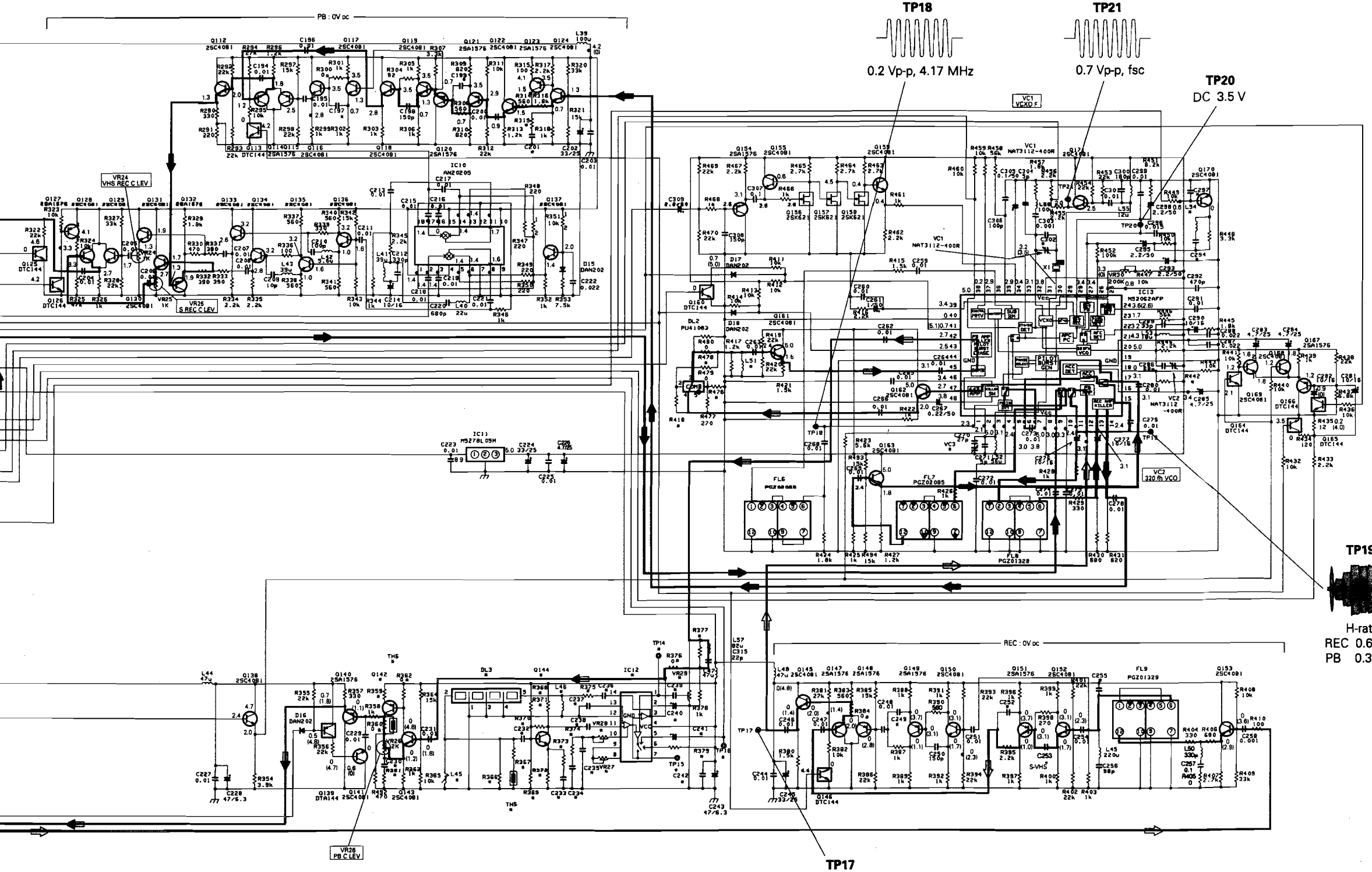


NOTE: PARTS WITH * MARK ARE OPEN CIRCUITS.

TP1

V-rate
PB 0.12 Vp-p

TP22
4 VDC

TP6

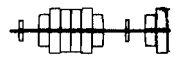

H-rate
PB 0.8 Vp-p

TP5

H-rate
REC 1.2 Vp-p

H-rate
PB 1.0 Vp-p

TP7

V-rate
REC 0.25 Vp-p

NOTE : PARTS WITH * MARK ARE OPEN CIRCUITS.

**TP6**

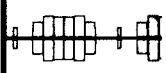

H-rate
PB 0.8 Vp-p

**TP2**
DC 2.5 V

**TP3**

5 Vp-p, 30 Hz

**TP10**

H-rate
REC 0.6Vp-p

**TP11**

REC 0.65 Vp-p

**TP13**

H-rate
REC 1.64 Vp-p

H-rate
PB 0.12 Vp-p

**TP12**

H-rate
REC 0.164 Vp-p

V-rate
PB 0.2 Vp-p

**TP9**

H-rate
PB 0.35 Vp-p

H-rate
REC 0.4 Vp-p

**TP8**

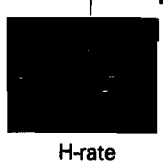

H-rate
REC 0.3 Vp-p

H-rate
PB 0.3 Vp-p

## — INNER PATTERN —

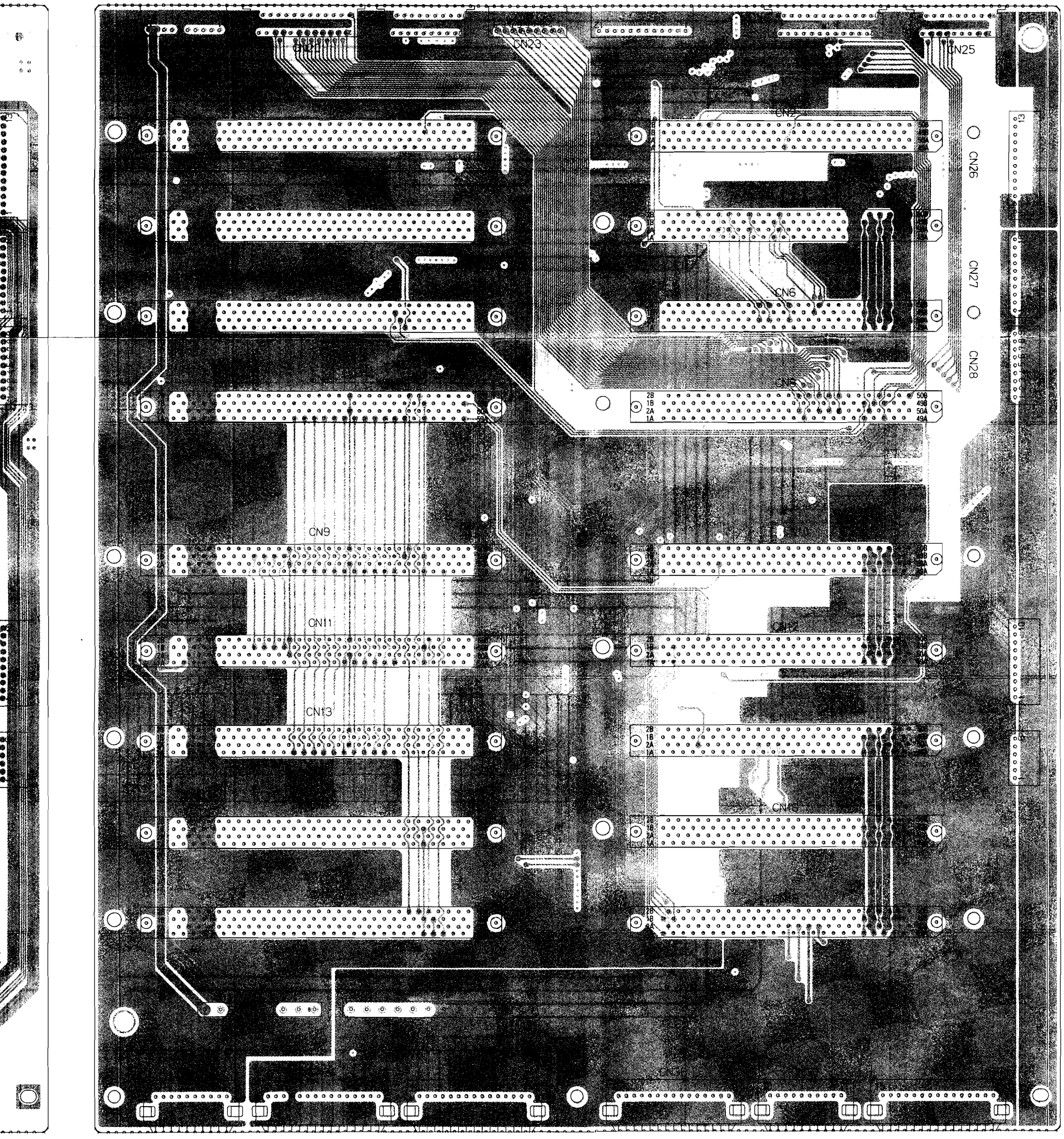

## 4.17 MOTHER-1 CIRCUIT BOARD

— SIDE B —

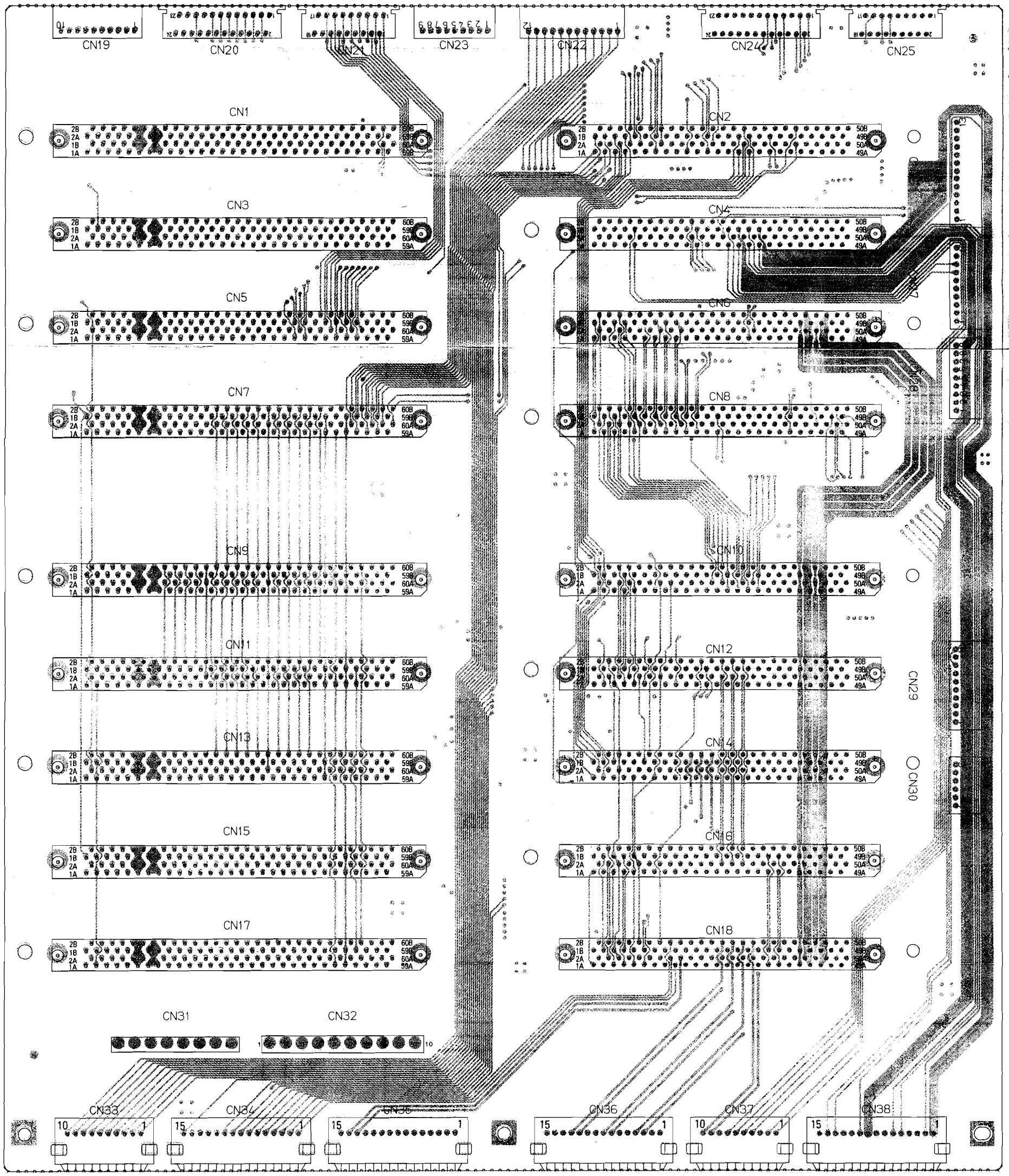

CN7

| | | |
|---|---|---|
| PBCK2(G) | 1 | 11 |
| PBCK2(-) | 2 | 10 |
| PBCK2(+) | 3 | 9 |
| PDAT2(G) | 4 | 8 |
| PDAT2(-) | 5 | 7 |
| PDAT2(+) | 6 | 6 |
| PBCK1(G) | 7 | 5 |
| PBCK1(-) | 8 | 4 |
| PBCK1(+) | 9 | 3 |
| PDAT1(G) | 10 | 2 |
| PDAT1(-) | 11 | 1 |
| PDAT1(+) | 12 | 0 |

| | | |
|---|---|---|
| 29A | S1REC(H) | 4 |
| 29B | S1REC(G) | 5 |
| 30A | S2REC(G) | 7 |
| 30B | S2REC(H) | 6 |
| 31A | | |
| 31B | | |
| 32A | | |
| 32B | | |
| 33A | S1PB(H) | 0 |
| 33B | S1PB(G) | 1 |
| 34A | S2PB(G) | 3 |
| 34B | S2PB(H) | 2 |
| 35A | | |
| 35B | | |
| 36A | | |
| 36B | | |
| 37A | | |
| 37B | | |
| 38A | | |
| 38B | | |
| 39A | | |
| 39B | | |
| 40A | A+22V | 5 |
| 40B | A+22V | |
| 41A | A-15V | 4 |
| 41B | A-15V | |
| 42A | A+15V | 3 |
| 42B | A+15V | |
| 43A | A+15V | 2 |
| 43B | A+15V | |
| 44A | (A-8V) | 1 |
| 44B | (A-8V) | |
| 45A | (A+8V) | |
| 45B | (A+8V) | |
| 46A | (A+8V) | |
| 46B | (A+8V) | |
| 47A | AGND | |
| 47B | AGND | |
| 48A | AGND | |
| 48B | AGND | |
| 49A | AGND | |
| 49B | AGND | |
| 50A | AGND | |
| 50B | AGND | 0 |

| | | |
|---|---|---|
| 29A | HIDP2(X) | 5 |
| 29B | HIDP2(G) | 4 |
| 30A | | |
| 30B | | |
| 31A | | |
| 31B | | |
| 32A | | |
| 32B | | |
| 33A | | |
| 33B | | |
| 34A | | |
| 34B | PBCK1(G) | 5 |
| 35A | PBCK1(-) | 4 |
| 35B | PBCK1(+) | 3 |
| 35A | PDAT1(G) | 2 |
| 36B | PDAT1(-) | 1 |
| 37A | PDAT1(+) | 0 |
| 37B | | |
| 38A | | |
| 38B | | |
| 39A | | |
| 39B | | |
| 40A | (A+22V) | 5 |
| 40B | (A+22V) | |
| 41A | (A-15V) | 4 |
| 41B | (A-15V) | |
| 42A | (A+15V) | 3 |
| 42B | (A+15V) | |
| 43A | (A+15V) | 2 |
| 43B | (A+15V) | |
| 44A | A-8V | 1 |
| 44B | A-8V | |
| 45A | A+8V | |
| 45B | A+8V | |
| 46A | A+8V | |
| 46B | A+8V | |
| 47A | AGND | |
| 47B | AGND | |
| 48A | AGND | |
| 48B | AGND | |
| 49A | AGND | |
| 49B | AGND | |
| 50A | AGND | |
| 50B | AGND | 0 |

CN12

| | | |
|---|---|---|
| 29A | HIDP2(X) | 3 |
| 29B | HIDP2(G) | 4 |
| 30A | | |
| 30B | | |
| 31A | | |
| 31B | PBCK2(G) | 11 |
| 32A | PBCK2(-) | 10 |
| 32B | PBCK2(+) | 9 |
| 33A | PDAT2(G) | 8 |
| 33B | PDAT2(-) | 7 |
| 34A | PDAT2(+) | 6 |
| 34B | | |
| 35A | | |
| 35B | | |
| 36A | | |
| 36B | | |
| 37A | | |
| 37B | | |
| 38A | | |
| 38B | | |
| 39A | | |
| 39B | | |
| 40A | (A+22V) | 5 |
| 40B | (A+22V) | |
| 41A | (A-15V) | 4 |
| 41B | (A-15V) | |
| 42A | (A+15V) | 3 |
| 42B | (A+15V) | |
| 43A | (A+15V) | 2 |
| 43B | (A+15V) | |
| 44A | A-8V | 1 |
| 44B | A-8V | |
| 45A | A+8V | |
| 45B | A+8V | |
| 46A | A+8V | |
| 46B | A+8V | |
| 47A | AGND | |
| 47B | AGND | |
| 48A | AGND | |
| 48B | AGND | |
| 49A | AGND | |
| 49B | AGND | |
| 50A | AGND | |
| 50B | AGND | 0 |

CN14

| | | |
|---|---|---|
| 1 | (HIFI/NOR) | 0 |
| 2 | P MUTE | 1 |
| 3 | AC OTEN | 2 |
| 4 | AC CLK | 3 |
| 5 | AC SIB | 4 |
| 6 | AC DATA | 5 |
| 7 | ACGND | 6 |
| 8 | | |
| 9 | PHB SCAN2 | 7 |
| 10 | EXISTO | 0 |
| 11 | EXIST1 | 1 |
| 12 | EXISTZ | 2 |
| 13 | TR(X) | 3 |
| 14 | TR(G) | 0 |
| 15 | HIDR1/(ART) | 1 |
| 16 | HIDP1 | 2 |
| 17 | IRM | 0 |
| 18 | 5V REF | 1 |
| 19 | OPJBCS | 0 |
| 20 | RFJBCS | 1 |
| 21 | JBDATA | 2 |
| 22 | JBCLK | 3 |
| 23 | SYSRST | 4 |
| 24 | SYSGND | 5 |

CN15

| | | |
|---|---|---|
| 1 | HIDR2(X) | 2 |
| 2 | HIDR2(G) | 1 |
| 3 | HIDP2(X) | 2 |
| 4 | HIDP2(G) | 3 |
| 5 | PRE CTL | 4 |
| 6 | SBE1 | 5 |
| 7 | SBE2 | 0 |
| 8 | SBEGND | 1 |
| 9 | OSCLK(X) | 0 |
| 10 | OSCLK(G) | 1 |
| 11 | OSDATA | 2 |
| 12 | OS CS | 3 |
| 13 | OS GND | 4 |
| 14 | (YC D0) | 0 |
| 15 | (YC D1) | 1 |
| 16 | (YC D2) | 2 |
| 17 | (YC D3) | 3 |
| 18 | (YCDGND) | 4 |

CN13

| | | |
|---|---|---|
| 1 | DGND | 0 |
| 2 | DGND | 1 |
| 3 | D+5V | 0 |
| 4 | A+22V | 1 |
| 5 | A-15V | 2 |
| 6 | A+15V | 3 |
| 7 | A-8V | 4 |
| 8 | A+8V | 5 |
| 9 | AGND | 0 |
| 10 | AGND | 1 |
| 11 | AGND | 2 |
| 12 | AGND | 3 |
| 13 | AGND | 4 |

# SCHEMATIC DIAGRAM

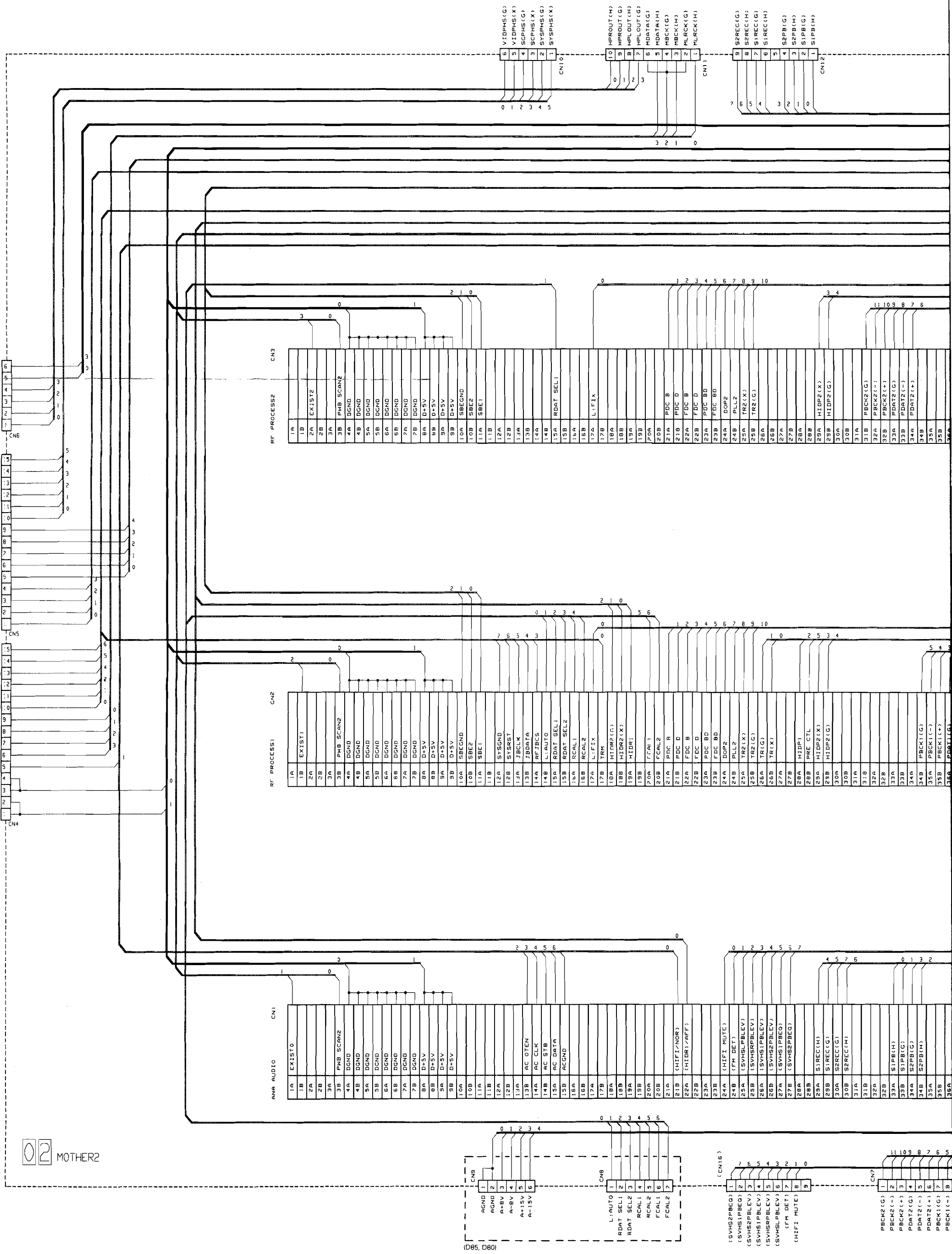

## 4.31 PRE/REC CIRCUIT BOARD

– Side A –

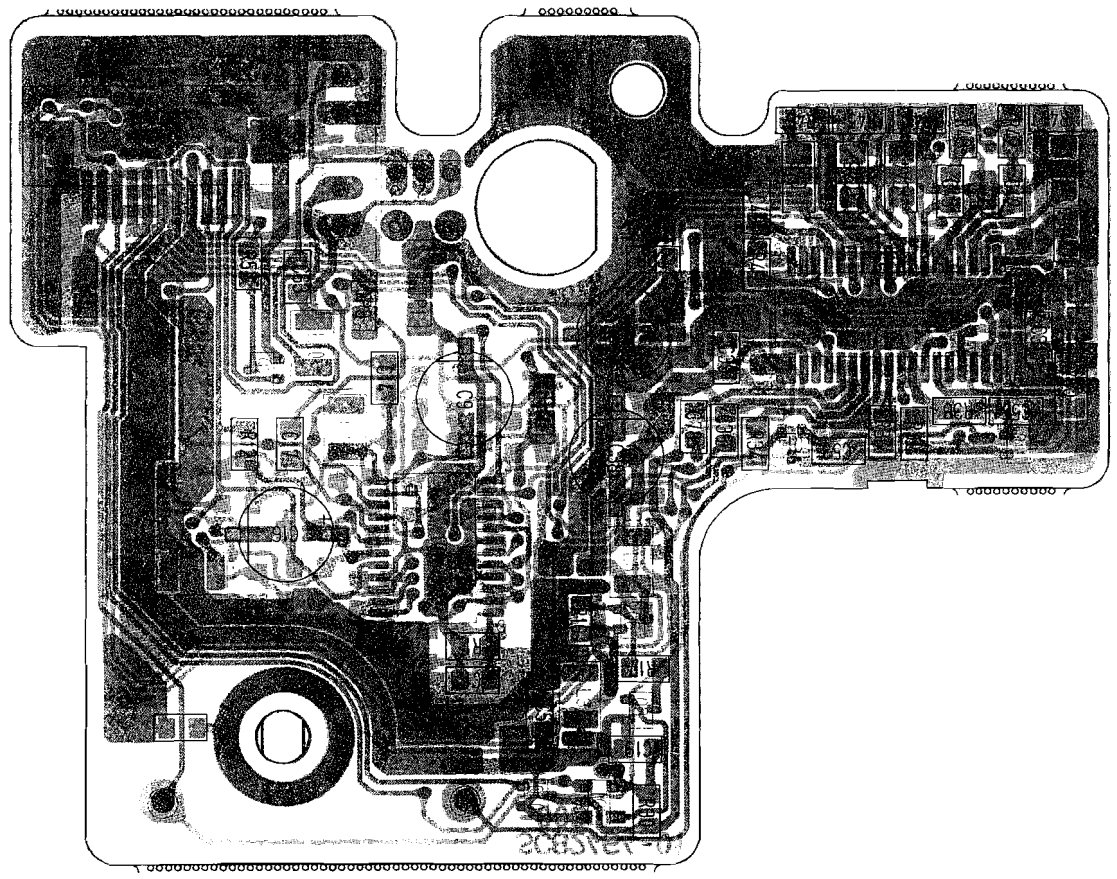

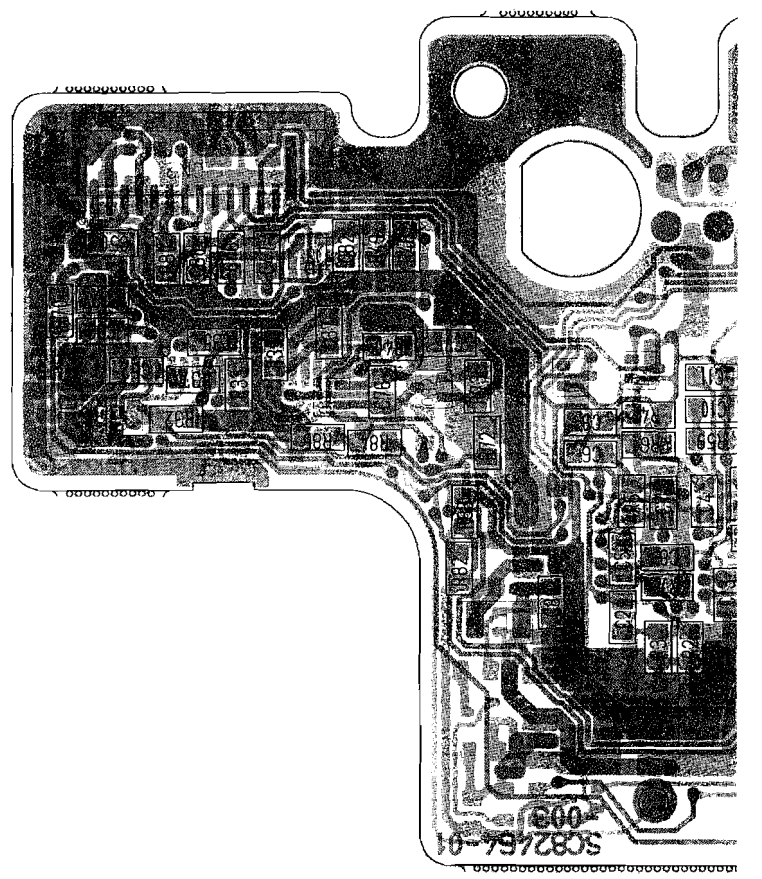


4-33

**Side A –**

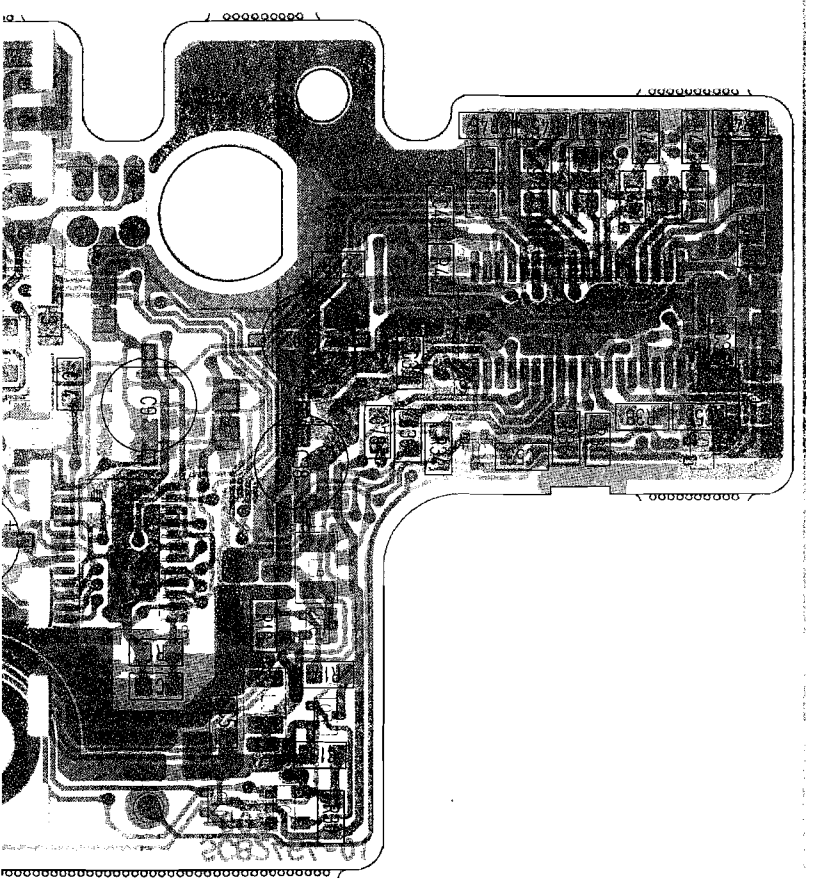


4-33

# PRE/REC S/S

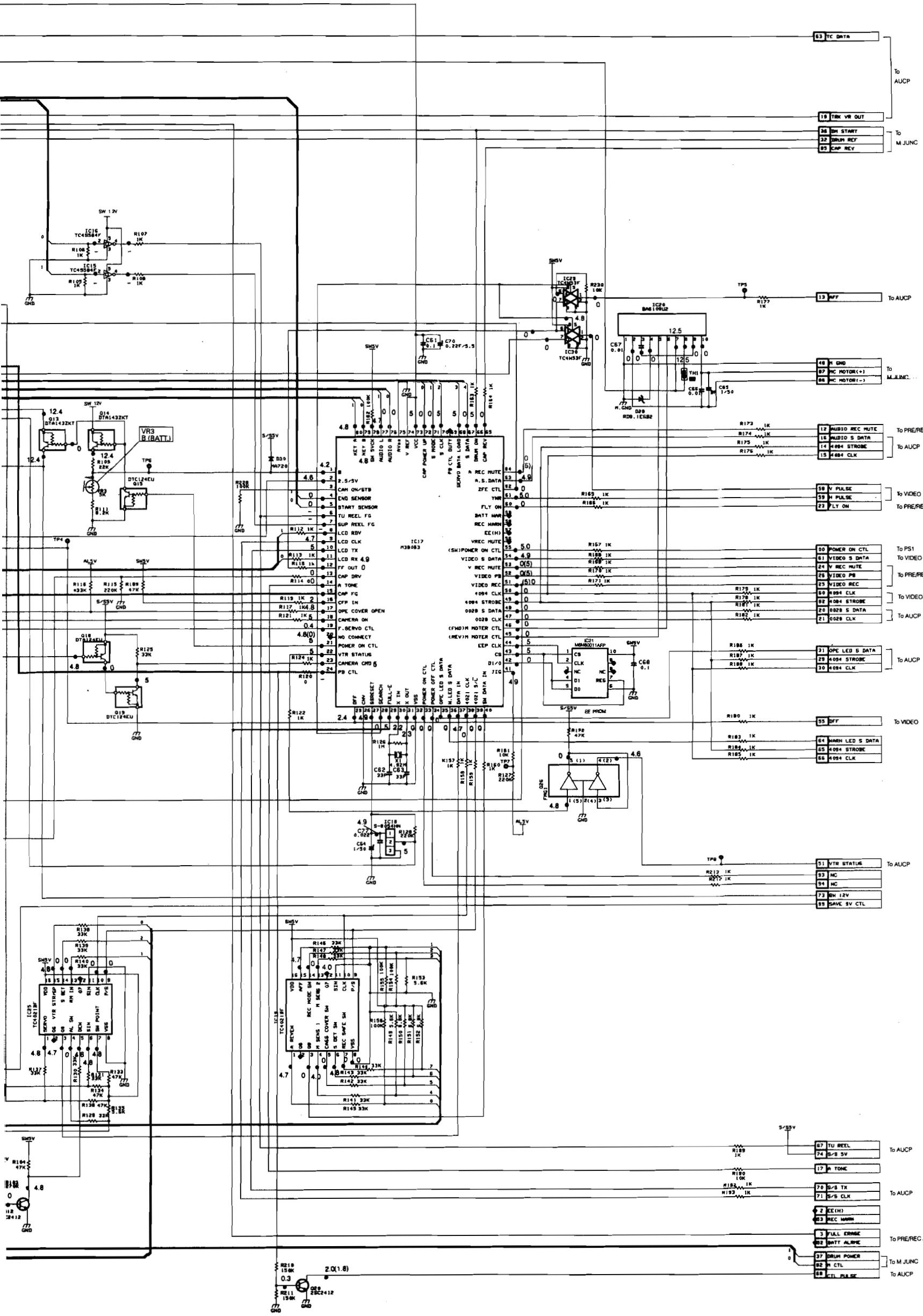


| 2602 | R17 | R22 | R26 | C26(BP) | R66 | R231 | R218 | R219 | R220 | R116 | X2 | C102 |
|---|---|---|---|---|---|---|---|---|---|---|---|---|
| OPEN | 820K | 82K | 22K | 0.22/50 | 270K | OPEN | OPEN | OPEN | 0 | 33K | SCV2682 4.43M | 0.01 |
| 13K | 470K | 56K | 82K | 0.47/50 | 100K | 0 | 0 | 0 | OPEN | 100K | SSV2662 3.58M | — |

## 4.32 S/S BOARD SCHEMATIC DIAGRAM 1 3

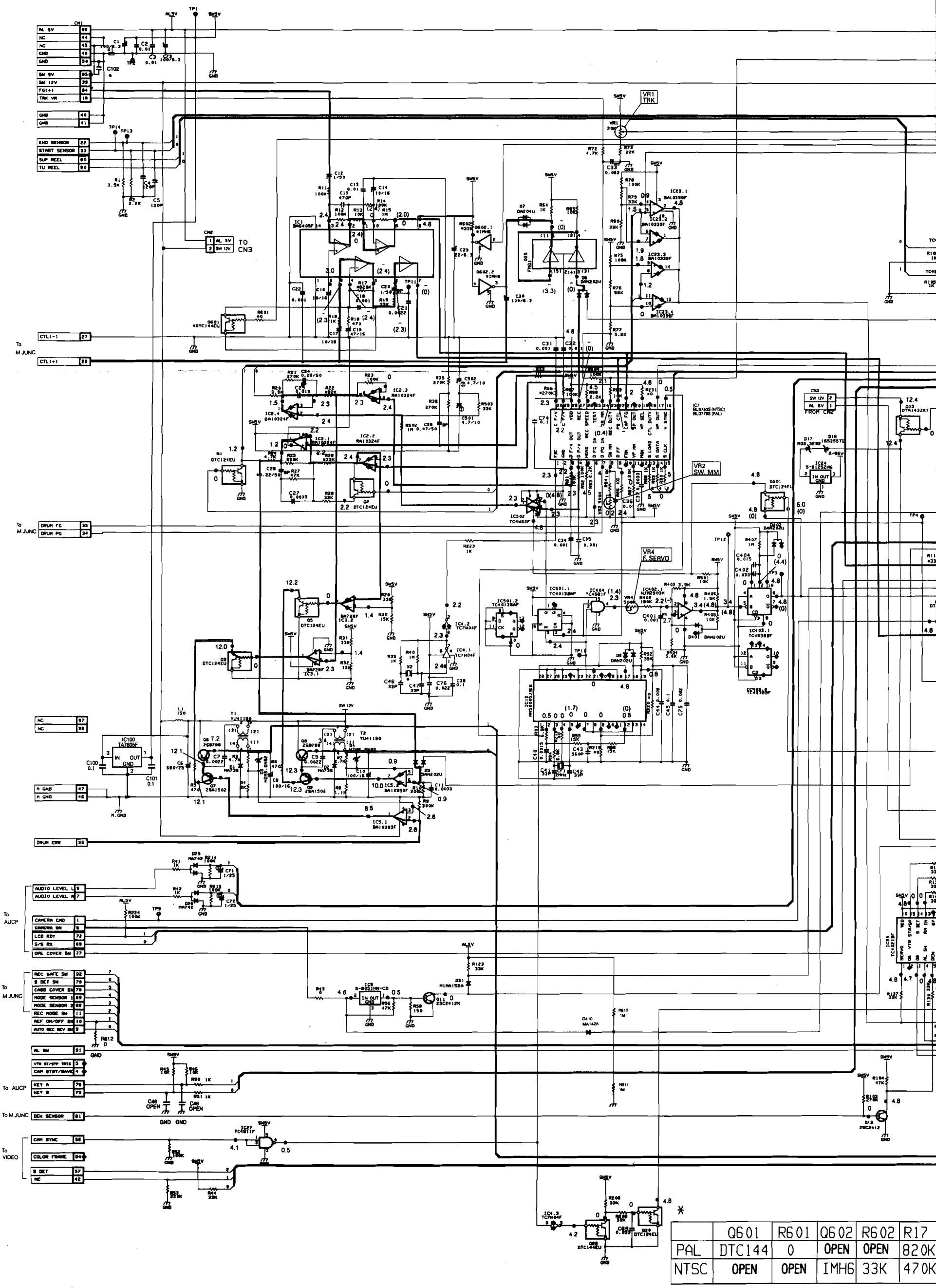


| | Q601 | R601 | Q602 | R602 | R17 |
|---|---|---|---|---|---|
| PAL | DTC144 | 0 | OPEN | OPEN | 820K |
| NTSC | OPEN | OPEN | IMH6 | 33K | 470K |

91129

## 4.19 MOTHER-2 CIRCUIT BOARD

— SIDE B —

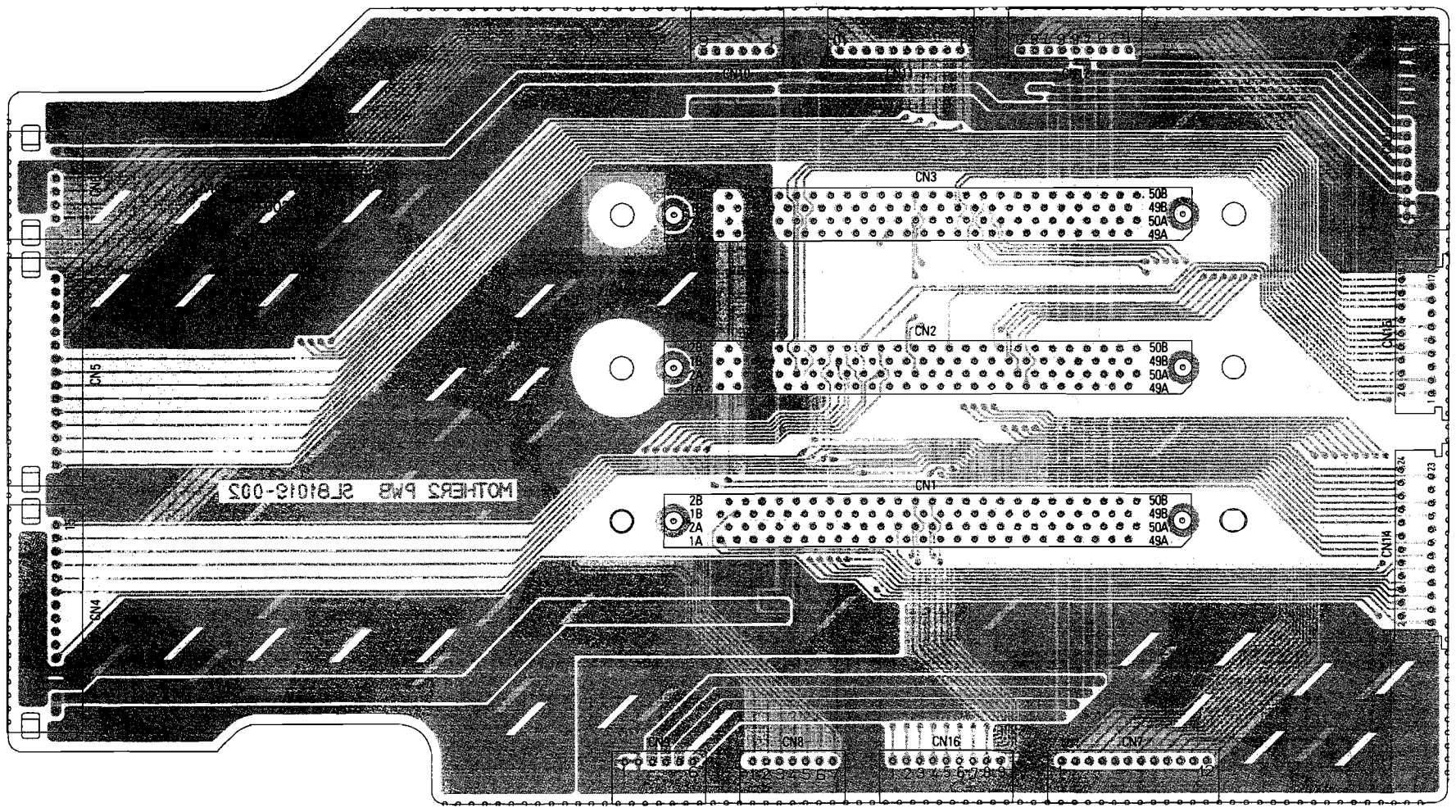




V E-V20471 / Druck 25

## 4.20 PV PRE SCHEMATIC DIAGRAM

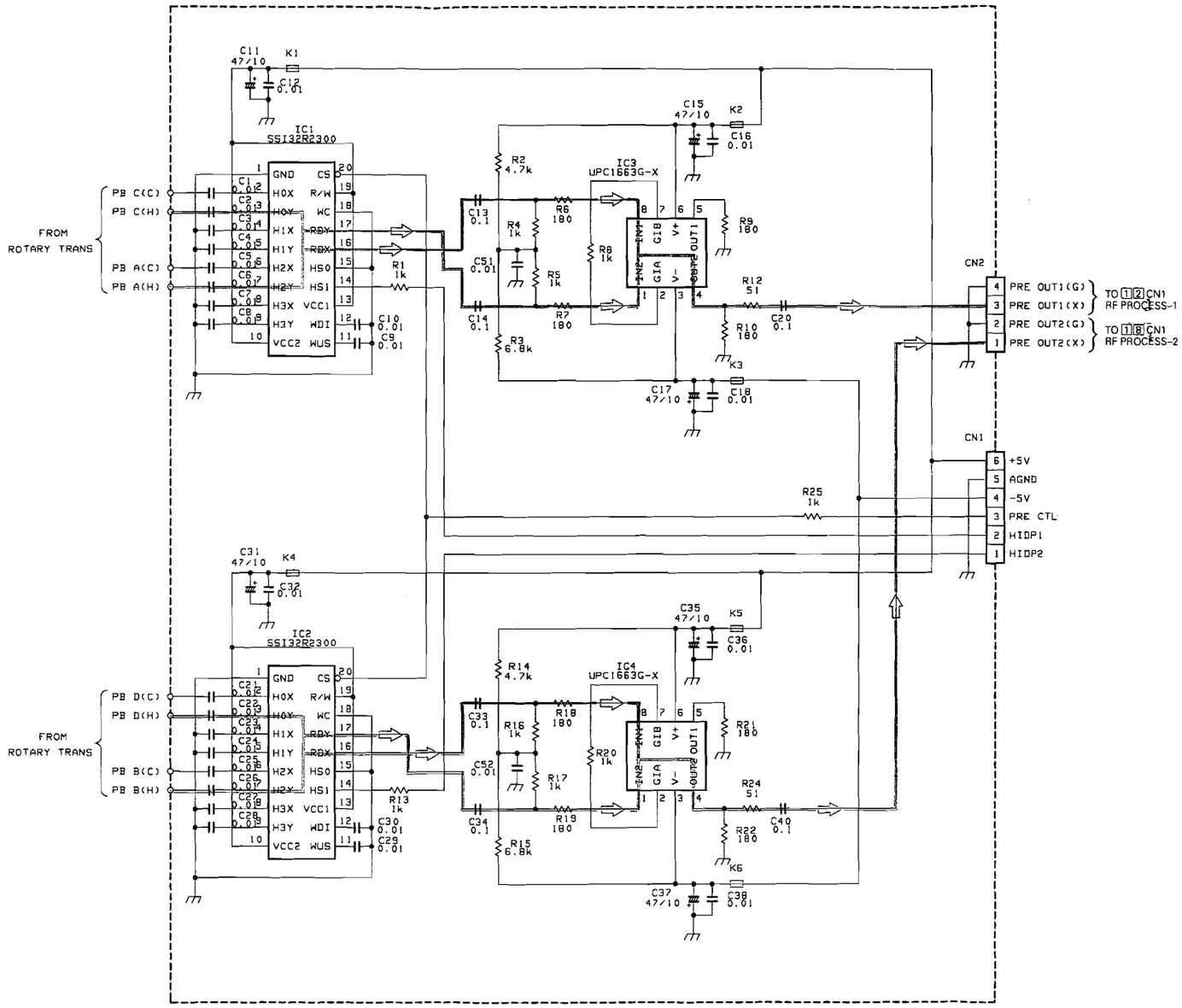


## 4.21 PV PRE CIRCUIT BOARD

— SIDE A —

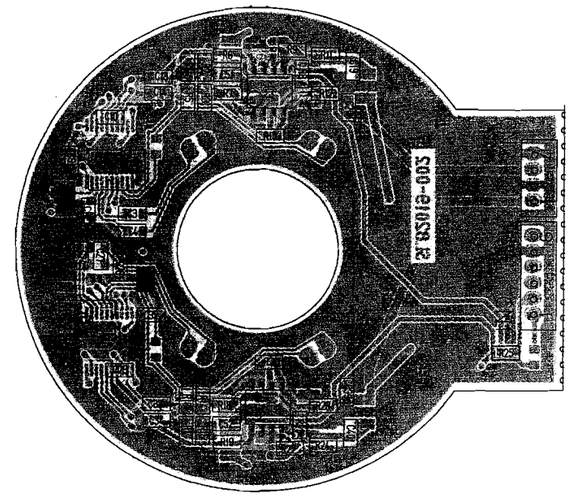


— SIDE B —

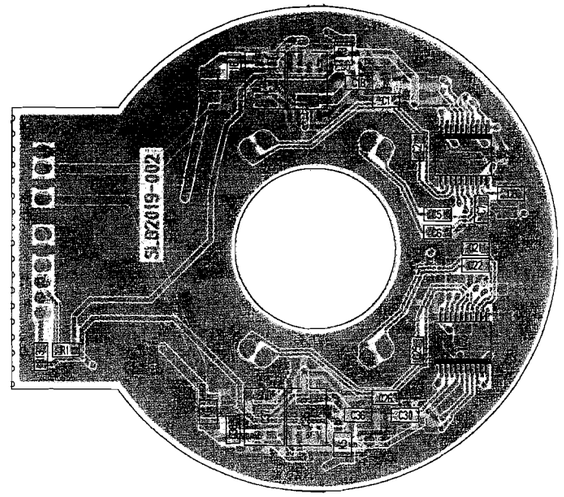

## 4.22 REC/ITI SCHEMATIC DIAGRAM (D85/D80)

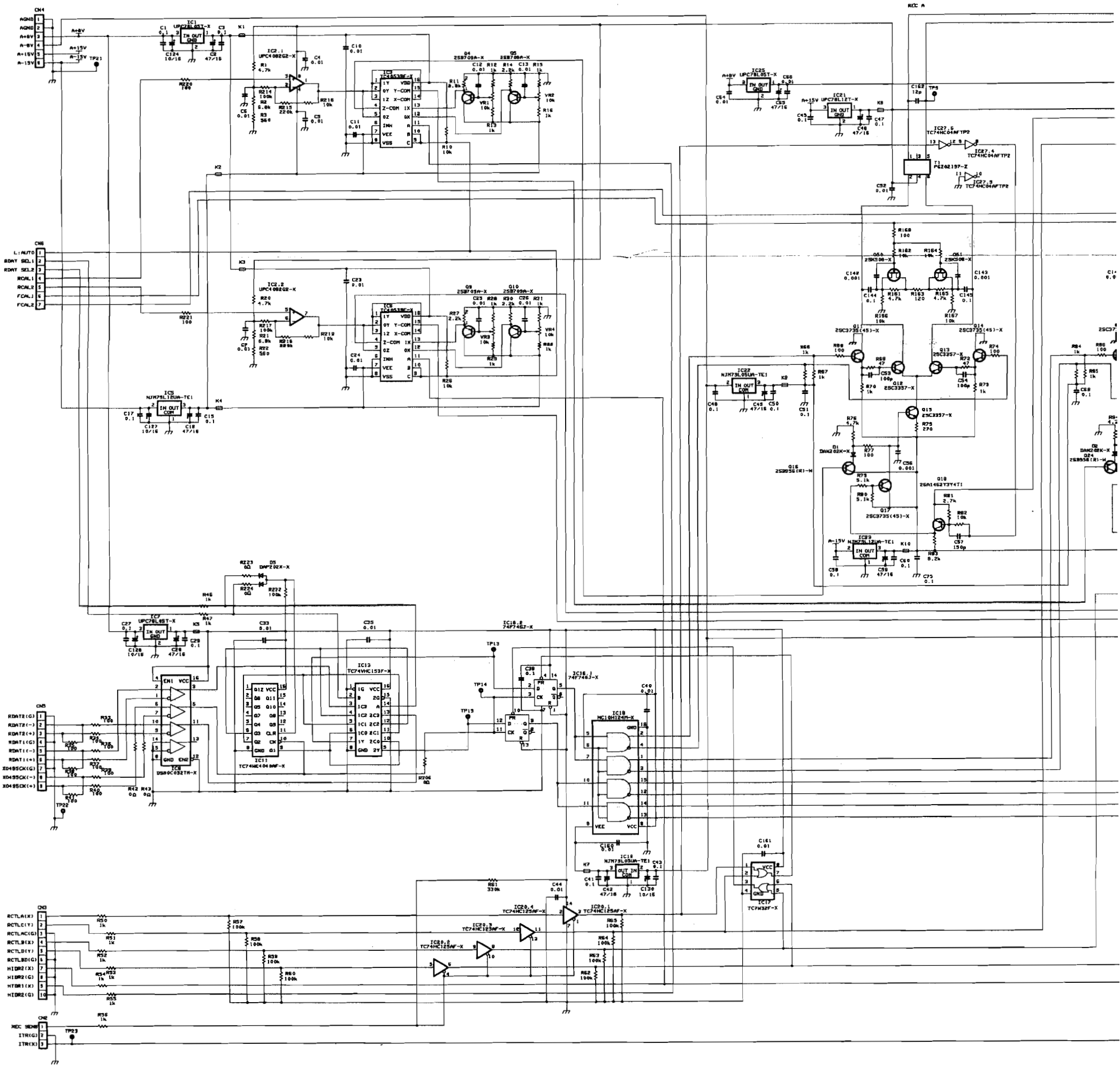

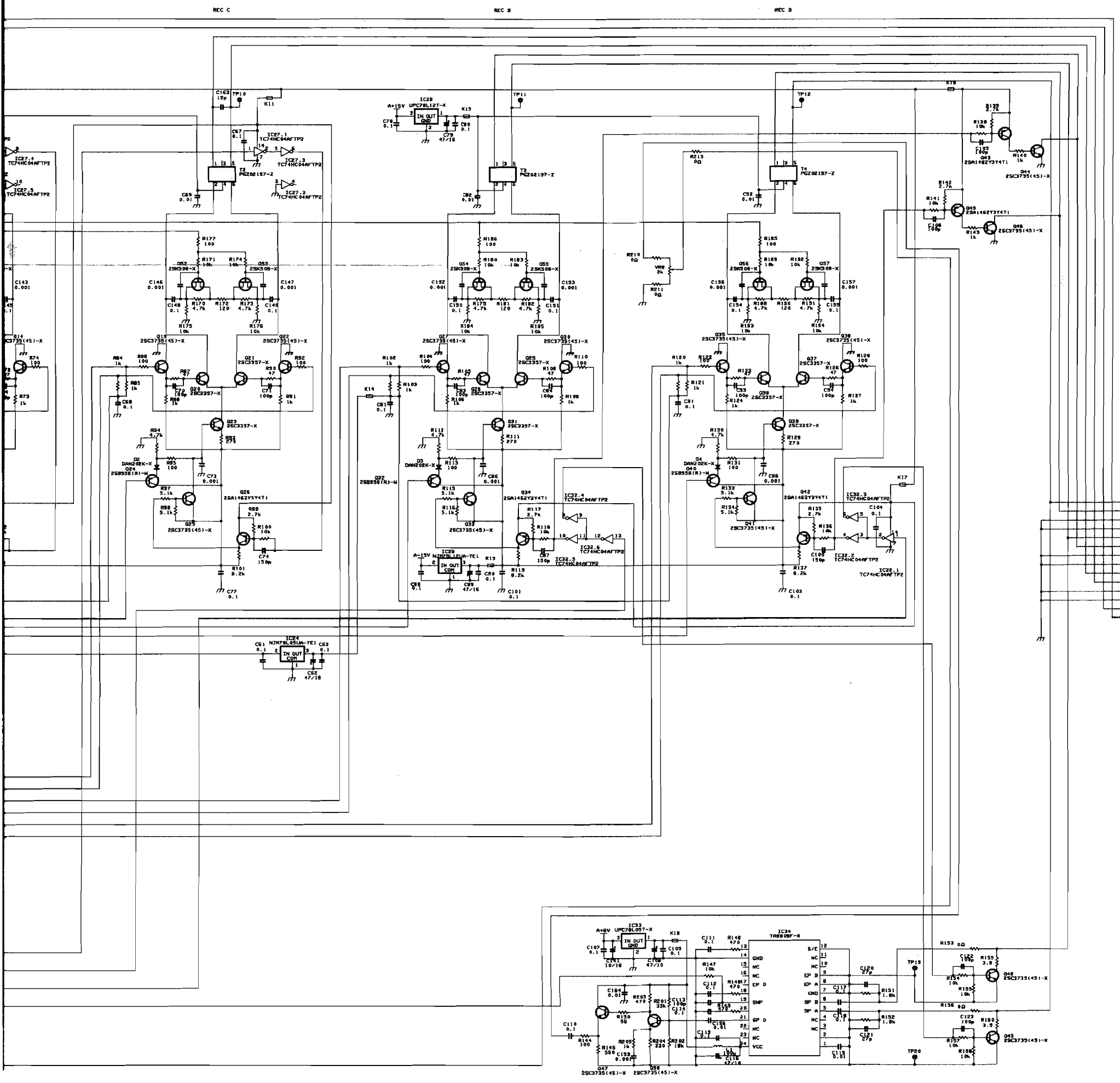
REC C
REC B
REC D
IC28 UPC78L12T-X
IC29 NJM79L12UA-TE1
IC24 NJM79L05UA-TE1
IC33 UPC78L05T-X
IC34 TA8809F-X
T2 PGZ02197-Z
T3 PGZ02197-Z
T4 PGZ02197-Z
IC27.1 TC74HC04AFTP2
IC27.2 TC74HC04AFTP2
IC27.3 TC74HC04AFTP2
IC27.4 TC74HC04AFTP2
IC27.5 TC74HC04AFTP2
IC32.1 TC74HC04AFTP2
IC32.2 TC74HC04AFTP2
IC32.3 TC74HC04AFTP2
IC32.4 TC74HC04AFTP2
IC32.5 TC74HC04AFTP2
IC32.6 TC74HC04AFTP2
CN1

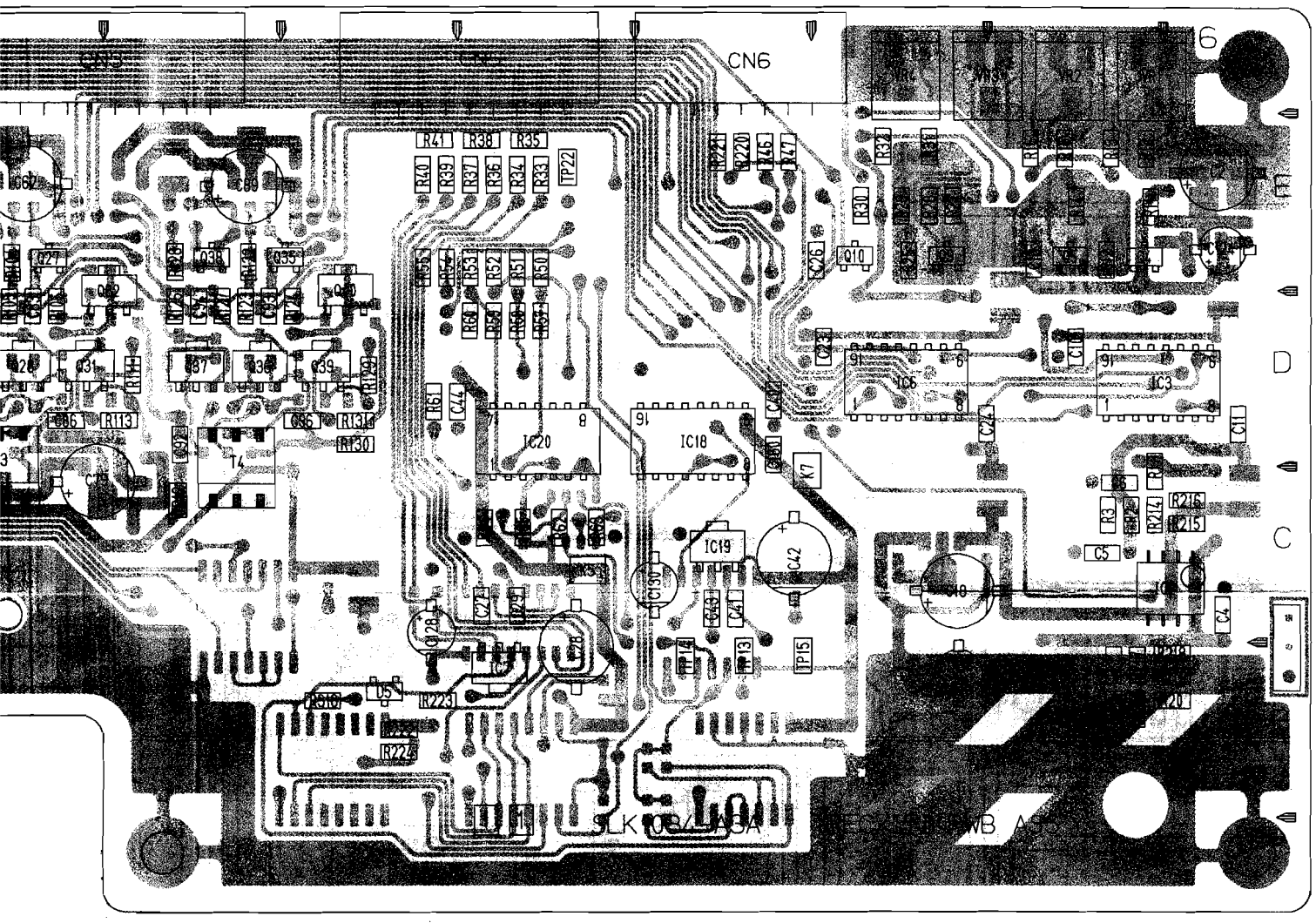


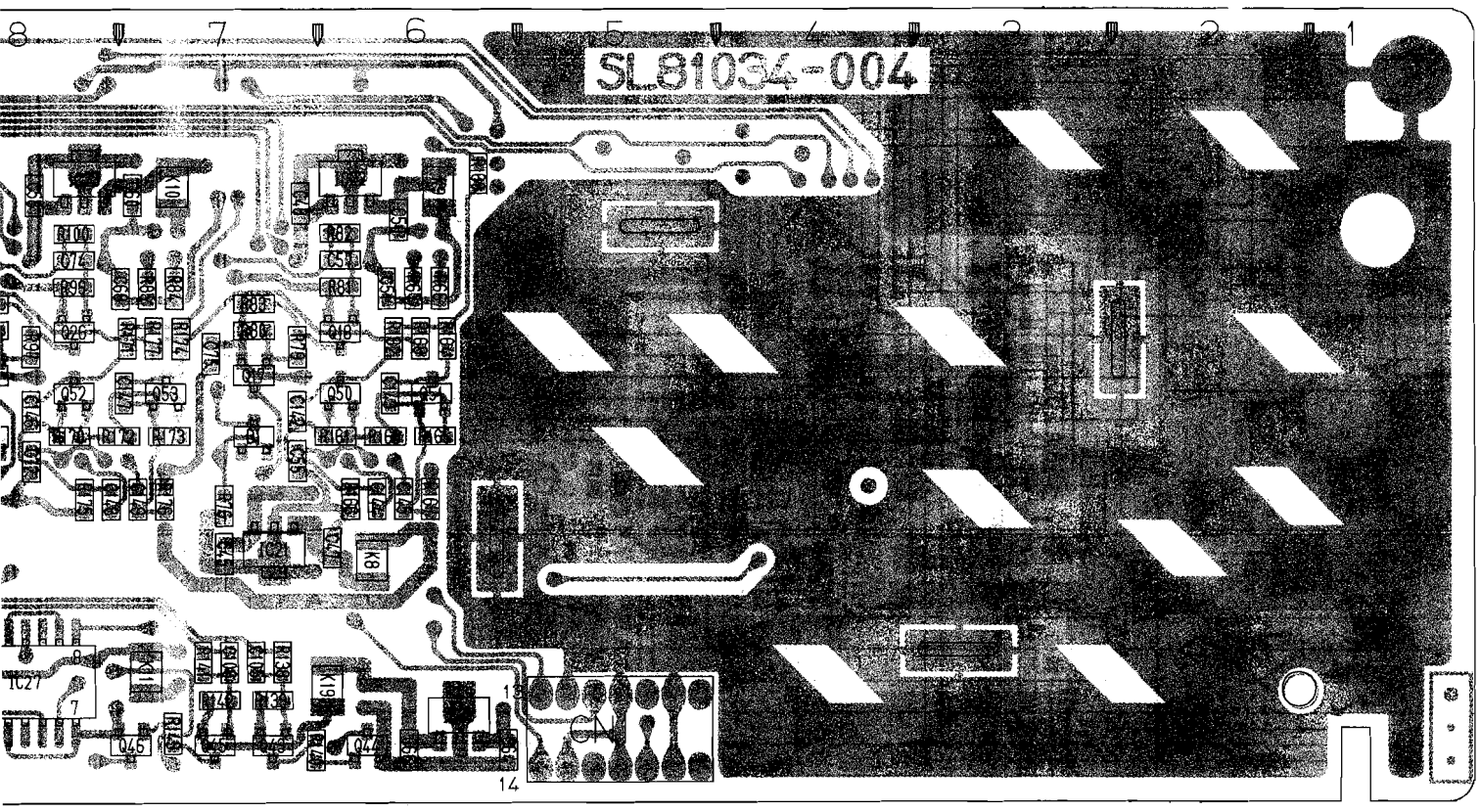


## ● ADDRESS TABLE OF BOARD PARTS

Each address may have an address error by one inte

Side — A-1C — Y axis / X axis

| | | | | | | | |
|---|---|---|---|---|---|---|---|
| IC1 | B- 16E | R58 | A- 12D | R191 | B- 10D | C105 | B- 7C |
| IC2 | A- 16C | R59 | A- 12D | R192 | B- 10D | C106 | B- 7C |
| IC3 | A- 15D | R60 | A- 12D | R193 | B- 10D | C107 | A- 3C |
| IC5 | B- 14C | R61 | A- 11D | R194 | B- 10D | C108 | A- 3C |
| IC6 | A- 14D | R62 | A- 12C | R195 | B- 10D | C109 | A- 3C |
| IC7 | A- 12B | R63 | A- 12C | R196 | A- 8F | C110 | A- 3E |
| IC8 | B- 12B | R64 | A- 12C | R197 | A- 6E | C111 | A- 5E |
| IC11 | B- 11A | R65 | A- 12C | R198 | A- 6F | C112 | A- 5E |
| IC13 | B- 12A | R66 | B- 6E | R199 | A- 7F | C113 | A- 4E |
| IC15 | B- 13A | R67 | B- 6E | R200 | A- 8F | C114 | A- 4E |
| IC16 | B- 13B | R68 | A- 6E | R201 | A- 4E | C115 | A- 4D |
| IC17 | B- 12C | R69 | A- 6D | R202 | A- 4E | C116 | A- 3D |
| IC18 | A- 13D | R70 | A- 6D | R203 | A- 3E | C117 | A- 4C |
| IC19 | A- 13C | R71 | A- 6E | R204 | A- 4E | C118 | A- 4C |
| IC20 | A- 12D | R72 | A- 6D | R205 | A- 4E | C119 | A- 4C |
| IC21 | B- 7C | R73 | A- 6D | R206 | B- 13A | C120 | A- 5C |
| IC22 | B- 6E | R74 | A- 6E | R207 | B- 13A | C121 | A- 4C |
| IC23 | B- 8E | R75 | A- 7D | R208 | B- 13A | C122 | A- 5C |
| IC24 | B- 9E | R76 | B- 7D | R209 | B- 13A | C123 | A- 4C |
| IC25 | B- 6B | R77 | A- 7D | R210 | A- 8F | C124 | A- 16E |
| IC27 | B- 8B | R79 | B- 7D | R211 | B- 9F | C127 | A- 14B |
| IC28 | B- 9C | R80 | B- 7E | R213 | A- 8F | C128 | A- 11B |
| IC29 | B- 10E | R81 | B- 6E | R214 | A- 16C | C130 | A- 13C |
| IC32 | B- 11B | R82 | B- 6E | R215 | A- 16C | C141 | A- 3C |
| IC33 | A- 3D | R83 | B- 7E | R216 | A- 16C | C142 | B- 7D |
| IC34 | A- 4D | R84 | B- 7E | R217 | A- 15B | C143 | B- 6D |
| | | R85 | B- 7E | R218 | A- 16B | C144 | B- 6D |
| Q4 | A- 15E | R86 | A- 8E | R219 | A- 16B | C145 | B- 6D |
| Q5 | A- 15E | R87 | A- 8D | R220 | A- 13E | C146 | B- 8D |
| Q9 | A- 14E | R88 | A- 8D | R221 | A- 13E | C147 | B- 7D |
| Q10 | A- 14E | R89 | A- 7F | R222 | A- 11B | C148 | B- 8D |
| Q11 | A- 6E | R90 | A- 7D | R223 | A- 11B | C149 | B- 7D |
| Q12 | A- 6D | R91 | A- 7D | R224 | A- 11B | C150 | B- 9D |
| Q13 | A- 6D | R92 | A- 7E | R316 | A- 11B | C151 | B- 9D |
| Q14 | A- 6E | R93 | A- 8D | | | C152 | B- 9D |
| Q15 | A- 7D | R94 | A- 8D | VR1 | A- 16F | C153 | B- 9D |
| Q16 | A- 7E | R95 | A- 8D | VR2 | A- 15F | C154 | B- 10D |
| Q17 | B- 7D | R97 | B- 8D | VR3 | A- 15F | C155 | B- 10D |
| Q18 | B- 6E | R98 | B- 8E | VR4 | A- 14F | C156 | B- 11D |
| Q19 | A- 8E | R99 | B- 8E | VR5 | A- 6F | C157 | B- 10D |
| Q20 | A- 8D | R100 | B- 8E | VR6 | A- 6F | C158 | A- 4D |
| Q21 | A- 7D | R101 | B- 8E | VR7 | A- 7F | C159 | A- 3E |
| Q22 | A- 7E | R102 | B- 9E | VR8 | A- 8F | C160 | A- 13C |
| Q23 | A- 8D | R103 | B- 9E | | | C161 | B- 12C |
| Q24 | A- 8E | R104 | A- 9E | C1 | B- 16E | C162 | A- 6C |
| Q25 | B- 8D | R105 | A- 9D | C2 | A- 16E | C163 | A- 7C |
| Q26 | B- 8E | R106 | A- 9D | C3 | B- 16E | C164 | A- 3E |
| Q27 | A- 9E | R107 | A- 8F | C4 | A- 16B | | |
| Q28 | A- 9D | R108 | A- 9D | C5 | A- 15C | L1 | A- 4D |
| Q29 | A- 9D | R109 | A- 9D | C6 | A- 15C | | |
| Q30 | A- 9E | R110 | A- 9E | C7 | A- 15B | TP9 | A- 6C |
| Q31 | A- 9D | R111 | A- 10D | C10 | A- 15D | TP10 | A- 7C |
| Q32 | A- 10E | R112 | B- 10D | C11 | A- 16D | TP11 | A- 8C |
| Q33 | B- 9D | R113 | A- 10D | C12 | A- 15E | TP12 | A- 10C |
| Q34 | B- 9E | R115 | B- 9D | C13 | A- 15E | TP13 | A- 13B |
| Q35 | A- 11E | R116 | B- 9E | C17 | B- 14C | TP14 | A- 13B |
| Q36 | A- 10D | R117 | B- 9E | C18 | A- 14C | TP15 | A- 14B |
| Q37 | A- 10D | R118 | B- 9E | C19 | B- 15C | TP19 | A- 5D |
| Q38 | A- 10E | R119 | B- 9E | C23 | A- 14D | TP20 | A- 4D |
| Q39 | A- 11D | R120 | B- 10E | C24 | A- 15D | TP21 | A- 5E |
| Q40 | A- 11E | R121 | B- 10E | C25 | A- 14E | TP22 | A- 12E |
| Q41 | B- 11D | R122 | A- 10E | C26 | A- 14E | TP23 | A- 8F |
| Q42 | B- 10E | R123 | A- 10D | C27 | A- 12C | | |
| Q43 | B- 7B | R124 | A- 11D | C28 | A- 12B | T1 | A- 6C |
| Q44 | B- 6B | R125 | A- 8F | C29 | A- 12C | T2 | A- 8C |
| Q45 | B- 7B | R126 | A- 10D | C33 | B- 11B | T3 | A- 9C |
| Q46 | B- 7B | R127 | A- 10D | C35 | B- 12B | T4 | A- 10C |
| Q47 | A- 3E | R128 | A- 10E | C37 | B- 14B | | |
| Q48 | A- 5C | R129 | A- 11D | C38 | B- 14C | K1 | B- 16E |
| Q49 | A- 4C | R130 | A- 11D | C40 | A- 13D | K2 | B- 16C |
| Q50 | B- 6D | R131 | A- 11D | C41 | A- 13B | K3 | B- 15E |
| Q51 | B- 6D | R133 | B- 11D | C42 | A- 14C | K4 | B- 15C |
| Q52 | B- 8D | R134 | B- 11E | C43 | A- 13B | K5 | A- 12C |
| Q53 | B- 7D | R135 | B- 10E | C44 | A- 12D | K7 | A- 14C |
| Q54 | B- 9D | R136 | B- 10E | C45 | B- 7C | K8 | B- 6C |
| Q55 | B- 9D | R137 | B- 11E | C46 | A- 7C | K9 | B- 6E |
| Q56 | B- 10D | R138 | B- 7C | C47 | B- 6C | K10 | B- 7E |
| Q57 | B- 10D | R139 | B- 7B | C48 | B- 6E | K11 | B- 7C |
| Q58 | A- 4E | R140 | B- 6B | C49 | A- 6E | K13 | B- 9C |
| | | R141 | B- 7C | C50 | B- 6E | K14 | B- 8E |
| D1 | B- 7D | R142 | B- 7B | C51 | B- 6E | K15 | B- 10E |
| D2 | B- 8D | R143 | B- 7B | C52 | A- 6D | K17 | B- 11C |
| D3 | B- 9D | R144 | A- 3E | C53 | A- 6D | K18 | A- 3D |
| D4 | B- 11D | R145 | A- 3E | C54 | A- 6D | K19 | B- 6B |
| D5 | A- 11B | R146 | A- 5D | C55 | B- 7D | | |
| | | R147 | A- 4D | C56 | A- 7D | CN1 | A- 4B |
| R1 | A- 16C | R148 | A- 5D | C57 | B- 6E | CN2 | A- 4F |
| R2 | A- 15C | R149 | A- 4D | C58 | B- 8E | CN3 | A- 9F |
| R3 | A- 15C | R150 | A- 3E | C59 | A- 8E | CN4 | A- 5F |
| R10 | B- 16D | R151 | A- 5C | C60 | B- 7E | CN5 | A- 12F |
| R11 | A- 16E | R152 | A- 4C | C61 | B- 9E | CN6 | A- 13F |
| R12 | A- 16E | R153 | A- 5C | C62 | A- 9E | | |
| R13 | A- 15E | R154 | A- 5C | C63 | B- 9E | | |
| R14 | A- 15E | R155 | A- 5C | C64 | B- 5B | | |
| R15 | A- 15E | R156 | A- 5C | C65 | A- 6B | | |
| R16 | A- 15E | R157 | A- 4C | C66 | B- 6B | | |
| R20 | A- 16B | R158 | A- 4C | C67 | B- 8C | | |
| R21 | A- 15B | R159 | A- 5C | C68 | B- 7E | | |
| R22 | A- 15B | R160 | A- 5C | C69 | A- 7D | | |
| R26 | B- 14D | R161 | B- 6D | C70 | A- 8D | | |
| R27 | A- 14E | R162 | B- 6D | C71 | A- 7D | | |
| R28 | A- 14E | R163 | B- 6D | C72 | B- 8D | | |
| R29 | A- 14E | R164 | B- 6D | C73 | A- 8D | | |
| R30 | A- 14E | R165 | B- 6D | C74 | B- 8E | | |
| R31 | A- 14F | R166 | B- 6D | C75 | B- 7D | | |
| R32 | A- 14F | R167 | B- 6D | C77 | B- 8D | | |
| R33 | A- 12E | R168 | B- 6D | C78 | B- 10C | | |
| R34 | A- 12E | R169 | B- 6E | C79 | A- 9C | | |
| R35 | A- 12F | R170 | B- 8D | C80 | B- 9C | | |
| R36 | A- 12E | R171 | B- 7D | C81 | B- 9E | | |
| R37 | A- 12E | R172 | B- 7D | C82 | A- 9D | | |
| R38 | A- 12F | R173 | B- 7D | C83 | A- 9D | | |
| R39 | A- 11E | R174 | B- 7D | C84 | A- 9D | | |
| R40 | A- 11E | R175 | B- 8D | C85 | B- 9D | | |
| R41 | A- 11F | R176 | B- 7D | C86 | A- 9D | | |
| R42 | B- 11C | R177 | B- 7D | C87 | B- 9E | | |
| R43 | B- 11C | R178 | A- 7E | C88 | B- 11E | | |
| R46 | A- 13E | R179 | B- 9D | C89 | A- 10E | | |
| R47 | A- 13E | R180 | B- 9D | C90 | B- 10E | | |
| R48 | B- 12A | R181 | B- 9D | C91 | B- 10E | | |
| R49 | B- 12B | R182 | B- 9D | C92 | A- 10D | | |
| R50 | A- 12E | R183 | B- 8D | C93 | A- 10D | | |
| R51 | A- 12E | R184 | B- 9D | C94 | A- 10D | | |
| R52 | A- 12E | R185 | B- 9D | C95 | B- 11D | | |
| R53 | A- 12E | R186 | B- 9D | C96 | A- 11D | | |
| R54 | A- 11E | R187 | A- 7F | C100 | B- 10E | | |
| R55 | A- 11E | R188 | B- 10D | C101 | B- 10D | | |
| R56 | A- 4E | R189 | B- 10D | C103 | B- 11D | | |
| R57 | A- 12D | R190 | B- 10D | C104 | B- 11C | | |

## REC/ITI CIRCUIT BOARD

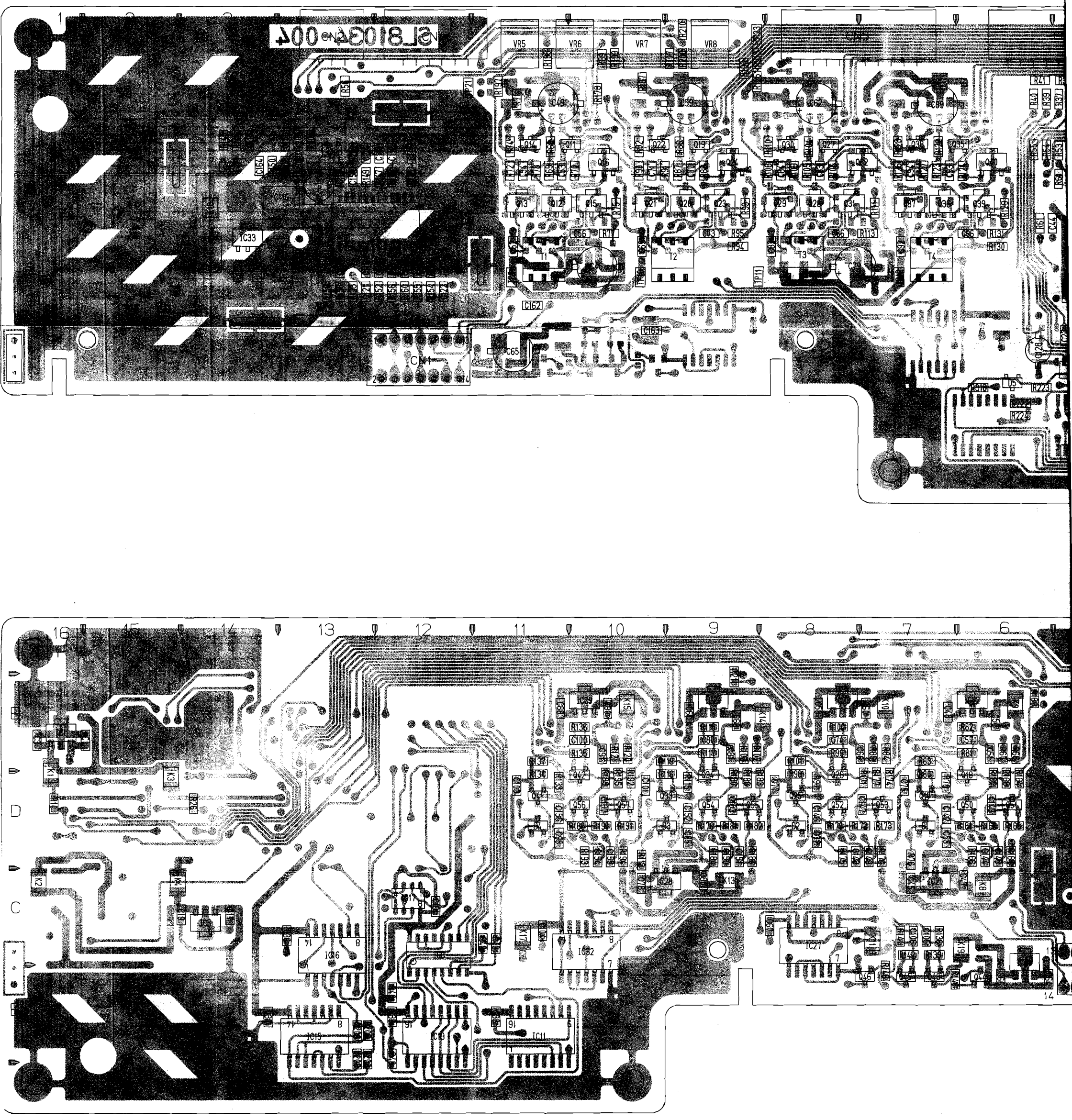

## 4.24 PV PROCESS SCHEMATIC DIAGRAMS

### — DIAGRAM 1/9 —

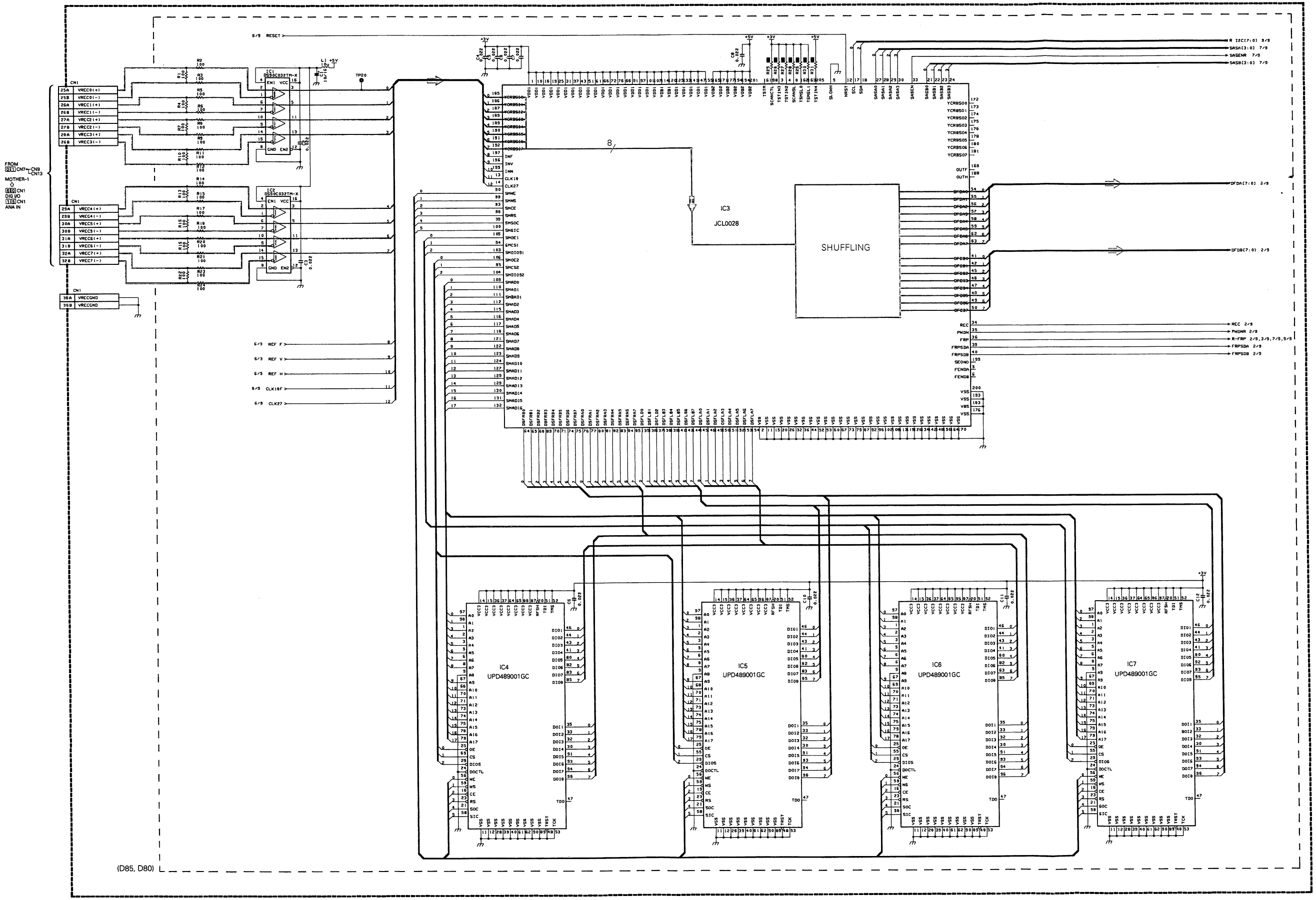

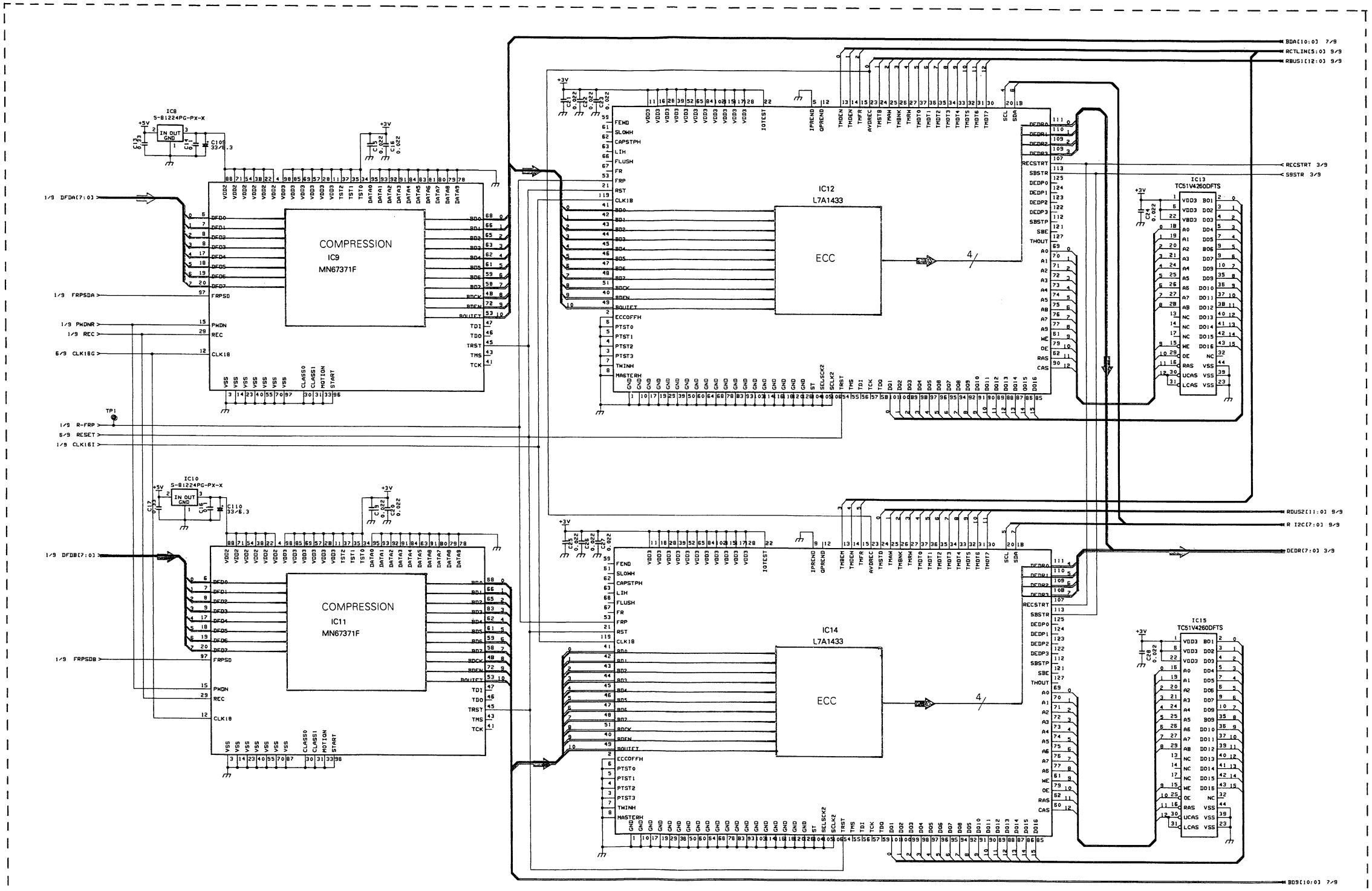
IC8
S-81224PG-PX-X
IC9
COMPRESSION
MN67371F
IC12
L7A1433
ECC
IC13
TC51V4260DFTS
IC10
S-81224PG-PX-X
IC11
COMPRESSION
MN67371F
IC14
L7A1433
ECC
IC15
TC51V4260DFTS
BDA[10:0] 7/9
RCTLIN[5:0] 9/9
RBUS1[12:0] 9/9
RECSTRT 3/9
SBSTR 3/9
RBUS2[11:0] 9/9
R I2C[7:0] 9/9
DCDR[7:0] 3/9
BDB[10:0] 7/9
1/9 DFDA[7:0]
1/9 DFDB[7:0]
1/9 FRPSDA
1/9 FRPSDB
1/9 PWDNR
1/9 REC
6/9 CLK18G
1/9 R-FRP
6/9 RESET
1/9 CLK16I
TP1

(D85, D80)

**— DIAGRAM 3/9 —**

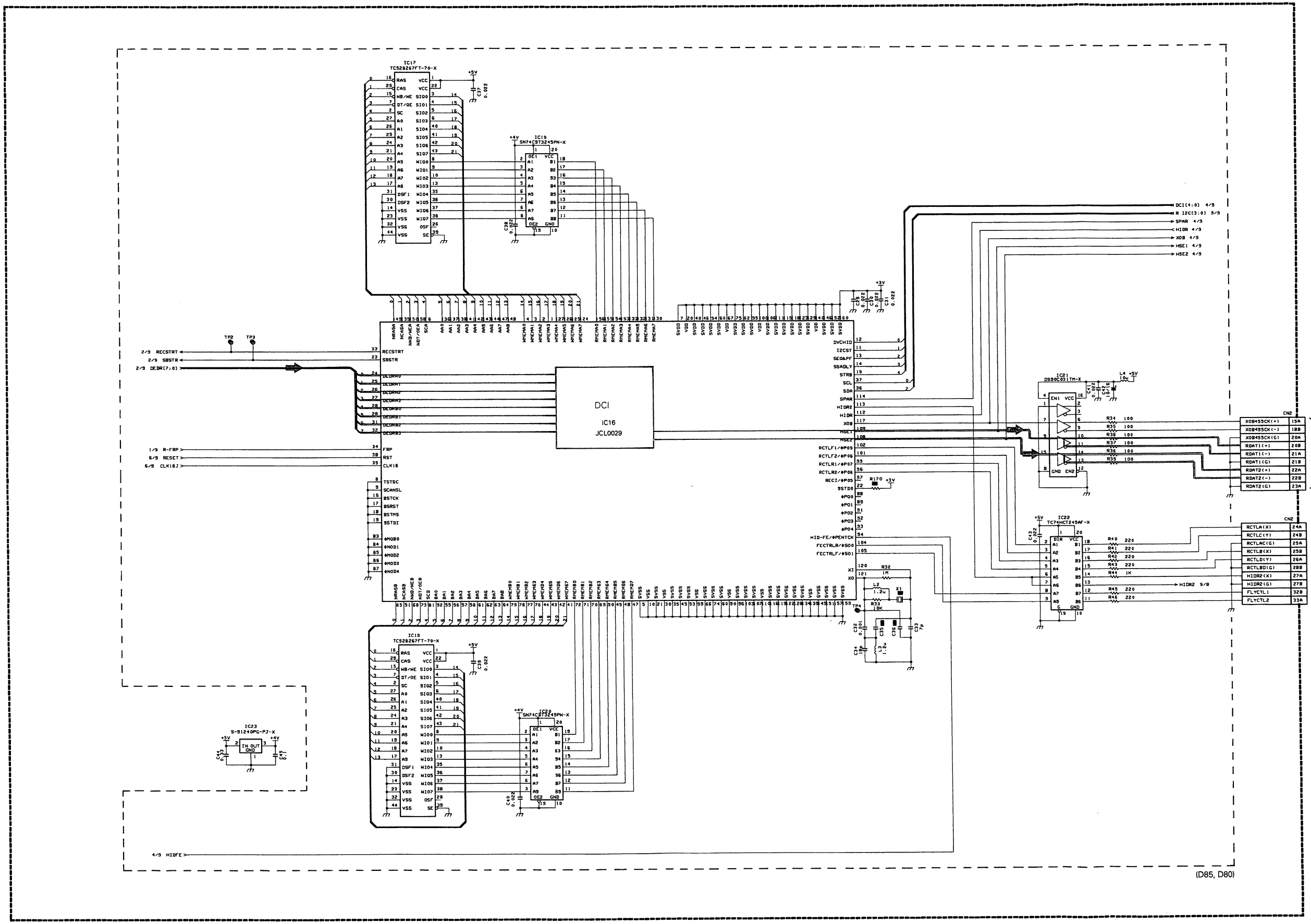
IC17
TC528267FT-70-X
IC19
SN74CBT3245PN-X
DCI
IC16
JCL0029
IC18
DS90C031TM-X
IC22
TC74HCT245AF-X
IC23
S-81240PC-PJ-X
TC528267FT-70-X
SN74CBT3245PN-X
CN2
X08455CK(+)
X08495CK(-)
X08455CK(G)
RDAT1(+)
RDAT1(-)
RDAT1(G)
RDAT2(+)
RDAT2(-)
RDAT2(G)
RCTLA(X)
RCTLC(Y)
RCTLAC(G)
RCTLB(X)
RCTLD(Y)
RCTLBD(G)
HIDR2(X)
HIDR2(G)
FLYCTL1
FLYCTL2
TO CN8→CN23 MOTHER-1
CN5 RECATI
DCI(4:0) 4/9
R I2C(3:0) 3/9
SPAR 4/9
HIDR 4/9
XDB 4/9
HSE1 4/9
HSE2 4/9
2/9 RECSTRT
2/9 SBSTR
2/9 DEDR(7:0)
1/9 R-FRP
6/9 RESCT
6/9 CLK18J
4/9 HIDFE
(D85, D80)

**— DIAGRAM 4/9 —**

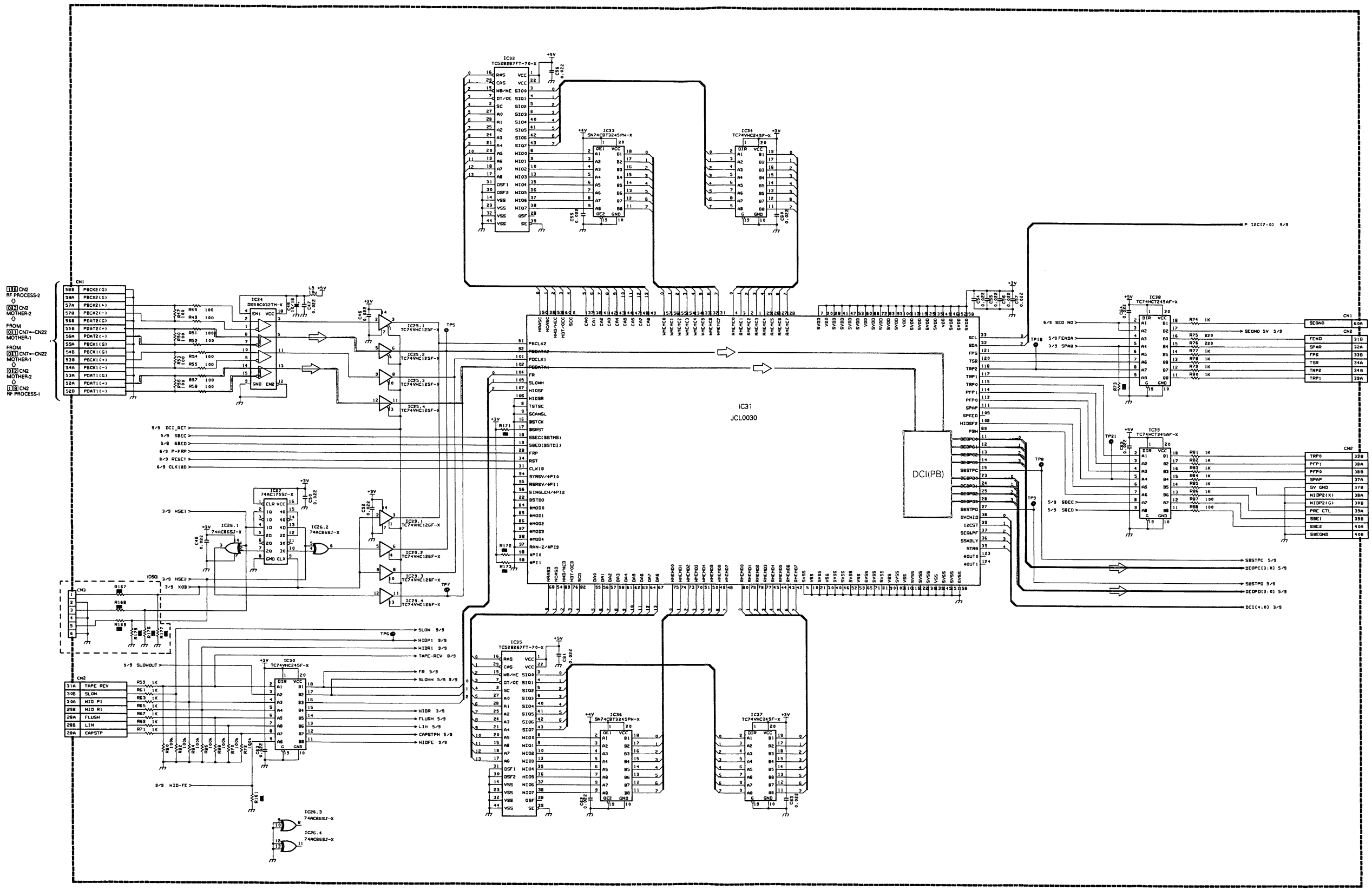
IC31
JCL0030
DCI(PB)
IC32
TC528287FT-70-X
IC33
SN74CBT3245PW-X
IC34
TC74VHC245F-X
IC35
TC528287FT-70-X
IC36
SN74CBT3245PW-X
IC37
TC74VHC245F-X
IC38
TC74HCT245AF-X
IC39
TC74HCT245AF-X
IC24
DS90C032TM-X
IC25.1
TC74VHC125F-X
IC25.2
TC74VHC125F-X
IC25.3
TC74VHC125F-X
IC25.4
TC74VHC125F-X
IC29.1
TC74VHC126F-X
IC29.2
TC74VHC126F-X
IC29.3
TC74VHC126F-X
IC29.4
TC74VHC126F-X
IC30
TC74VHC245F-X
IC27
74AC175SJ-X
IC26.1
74AC86SJ-X
IC26.2
74AC86SJ-X
IC26.3
74AC86SJ-X
IC26.4
74AC86SJ-X
CN1
CN2
CN3
IDSQ1
TP5
TP6
TP7
TP8
TP9
TP10
TP21
P I2C(7:0) 9/9
SCL
SDA
TSR
TRP2
TRP1
TRP0
PFP1
PFP0
SPAP
SPEED
HIDSF2
PBK
DEDPC0
DEDPC1
DEDPC2
DEDPC3
DEDPD0
DEDPD1
DEDPD2
DEDPD3
SBSTPC
SBSTPD
DVCH10
I2CS1
SCGLF
SSADLY
STR8
4OUT0
4OUT1
6/9 SEQ NO
5/9 FENDA
5/9 SPAB
SEQNO 5V 5/9
5/9 SBEC
5/9 SBED
SBSTPC 5/9
DEDPC[3:0] 5/9
SBSTPD 5/9
DEDPD[3:0] 5/9
DCI[4:0] 3/9
9/9 DCI_RET
5/9 SBCC
5/9 SBCD
6/9 P-FRP
8/9 RESET
6/9 CLK18D
3/9 HSE1
3/9 HSE2
3/9 XOB
3/9 SLOWOUT
3/9 HID-FE
SLOW 3/9
HIDP1 3/9
HIDR1 3/9
TAPE-REV 8/9
FR 5/9
SLOWH 5/8 3/9
HIDR 3/9
FLUSH 5/9
LIH 5/9
CAPSTPH 5/9
HIDFE 3/9
PBCLK2
PBDATA2
PDCLK1
PBDATA1
FR
SLOWH
HIDSF
HIDSR
TSTSC
SCANSL
BSTCK
BSRST
SBCC(BSTMS)
SBCD(BSTDI)
FRP
RST
CLK18
SYRSV/4PI0
RSRSV/4PI1
SINGLEH/4PI2
BSTDO
4MOD0
4MOD1
4MOD2
4MOD3
4MOD4
RAN-Z/4PI3
4PI0
4PI1
1 18 CN2 RF PROCESS-2
2 17 CN2 MOTHER-2
FROM
0 11 CN7←CN22 MOTHER-1
FROM
0 11 CN7←CN22 MOTHER-1
0 12 CN2 MOTHER-2
1 18 CN2 RF PROCESS-1
TAPE REV
SLOW
HID PI
HID RI
FLUSH
LIN
CAPSTP
SEQNO
FEND
SPAR
FPS
TSR
TRPZ
TRP1
SW GND
HIDP2(X)
HIDP2(G)
PRC CTL
SBE1
SBEZ
SBEGND

**— DIAGRAM 5/9 —**

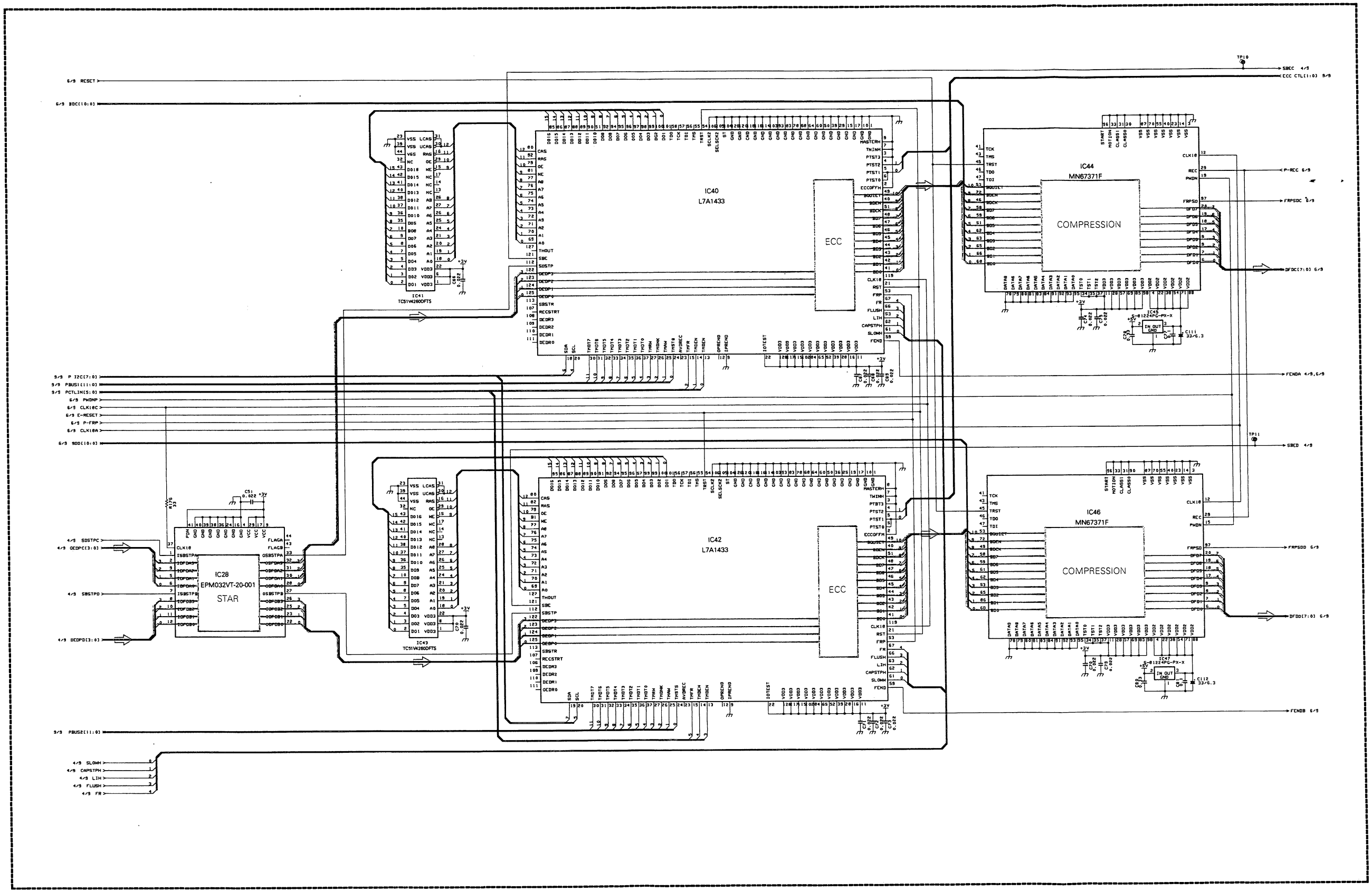
IC40
L7A1433
ECC
IC41
TC51V4260DFTS
IC44
MN67371F
COMPRESSION
IC28
EPM032VT-20-001
STAR
IC42
L7A1433
ECC
IC43
TC51V4260DFTS
IC46
MN67371F
COMPRESSION
6/9 RESET
6/9 BDCC[1:0]
SBCC 4/9
ECC CTL[1:0] 5/9
P-REC 6/9
FRPSDC 6/9
DFDC[7:0] 6/9
FENDA 4/9,6/9
SBCD 4/9
FRPSDD 6/9
DFDD[7:0] 6/9
FENDB 6/9
4/9 SDSTPC
4/9 DCDPC[3:0]
4/9 SBSTPD
4/9 DCDPD[3:0]
4/9 SLOWH
4/9 CAPSTPH
4/9 LIH
4/9 FLUSH
4/9 FR

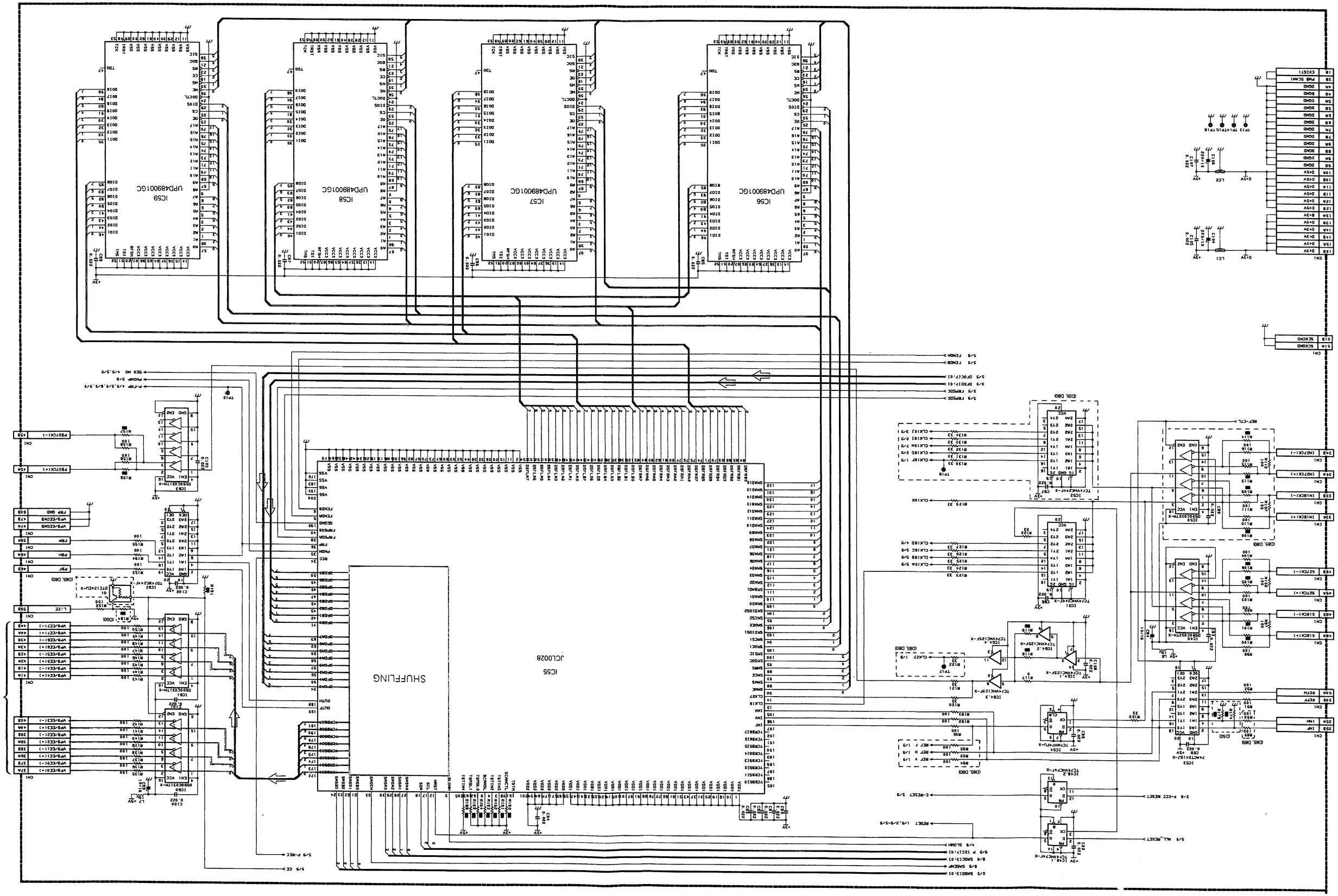
IC56 UPD489001GC
IC57 UPD489001GC
IC58 UPD489001GC
IC59 UPD489001GC
SHUFFLING
IC55 JCL0028
IC64 TC74VHC244F-X
IC63 TC74VHC244F-X
IC62 TC74VHC244F-X
IC61 TC74VHC244F-X
IC60 TC74VHC244F-X
IC54 TC74VHC125F-X
IC53 74HCT241SF-X
IC52 DS90CB031TM-X
IC51 DS90CB031TM-X
IC50 DS90CB031TM-X
IC49 DS90CB031TM-X
IC48 DS90CB031TM-X
IC47 DS90CB031TM-X
IC46 DS90CB031TM-X
IC45 DS90CB031TM-X
IC44 DS90CB031TM-X
IC43 DS90CB031TM-X
IC42 DS90CB031TM-X
IC41 DS90CB031TM-X
IC40 DS90CB031TM-X
IC39 DS90CB031TM-X
IC38 DS90CB031TM-X
IC37 DS90CB031TM-X
IC36 DS90CB031TM-X
IC35 DS90CB031TM-X
IC34 DS90CB031TM-X
IC33 DS90CB031TM-X
IC32 DS90CB031TM-X
IC31 DS90CB031TM-X
IC30 DS90CB031TM-X
IC29 DS90CB031TM-X
IC28 DS90CB031TM-X
IC27 DS90CB031TM-X
IC26 DS90CB031TM-X
IC25 DS90CB031TM-X
IC24 DS90CB031TM-X
IC23 DS90CB031TM-X
IC22 DS90CB031TM-X
IC21 DS90CB031TM-X
IC20 DS90CB031TM-X
IC19 DS90CB031TM-X
IC18 DS90CB031TM-X
IC17 DS90CB031TM-X
IC16 DS90CB031TM-X
IC15 DS90CB031TM-X
IC14 DS90CB031TM-X
IC13 DS90CB031TM-X
IC12 DS90CB031TM-X
IC11 DS90CB031TM-X
IC10 DS90CB031TM-X
IC9 DS90CB031TM-X
IC8 DS90CB031TM-X
IC7 DS90CB031TM-X
IC6 DS90CB031TM-X
IC5 DS90CB031TM-X
IC4 DS90CB031TM-X
IC3 DS90CB031TM-X
IC2 DS90CB031TM-X
IC1 DS90CB031TM-X
CN1
CN2
CN3
CN4
CN5
CN6
CN7
CN8
CN9
CN10
CN11
CN12
CN13
CN14
CN15
CN16
CN17
CN18
CN19
CN20
CN21
CN22
CN23
CN24
CN25
CN26
CN27
CN28
CN29
CN30
CN31
CN32
CN33
CN34
CN35
CN36
CN37
CN38
CN39
CN40
CN41
CN42
CN43
CN44
CN45
CN46
CN47
CN48
CN49
CN50
CN51
CN52
CN53
CN54
CN55
CN56
CN57
CN58
CN59
CN60
CN61
CN62
CN63
CN64
CN65
CN66
CN67
CN68
CN69
CN70
CN71
CN72
CN73
CN74
CN75
CN76
CN77
CN78
CN79
CN80
CN81
CN82
CN83
CN84
CN85
CN86
CN87
CN88
CN89
CN90
CN91
CN92
CN93
CN94
CN95
CN96
CN97
CN98
CN99
CN100
CN101
CN102
CN103
CN104
CN105
CN106
CN107
CN108
CN109
CN110
CN111
CN112
CN113
CN114
CN115
CN116
CN117
CN118
CN119
CN120
CN121
CN122
CN123
CN124
CN125
CN126
CN127
CN128
CN129
CN130
CN131
CN132
CN133
CN134
CN135
CN136
CN137
CN138
CN139
CN140
CN141
CN142
CN143
CN144
CN145
CN146
CN147
CN148
CN149
CN150
CN151
CN152
CN153
CN154
CN155
CN156
CN157
CN158
CN159
CN160
CN161
CN162
CN163
CN164
CN165
CN166
CN167
CN168
CN169
CN170
CN171
CN172
CN173
CN174
CN175
CN176
CN177
CN178
CN179
CN180
CN181
CN182
CN183
CN184
CN185
CN186
CN187
CN188
CN189
CN190
CN191
CN192
CN193
CN194
CN195
CN196
CN197
CN198
CN199
CN200
CN201
CN202
CN203
CN204
CN205
CN206
CN207
CN208
CN209
CN210
CN211
CN212
CN213
CN214
CN215
CN216
CN217
CN218
CN219
CN220
CN221
CN222
CN223
CN224
CN225
CN226
CN227
CN228
CN229
CN230
CN231
CN232
CN233
CN234
CN235
CN236
CN237
CN238
CN239
CN240
CN241
CN242
CN243
CN244
CN245
CN246
CN247
CN248
CN249
CN250
CN251
CN252
CN253
CN254
CN255
CN256
CN257
CN258
CN259
CN260
CN261
CN262
CN263
CN264
CN265
CN266
CN267
CN268
CN269
CN270
CN271
CN272
CN273
CN274
CN275
CN276
CN277
CN278
CN279
CN280
CN281
CN282
CN283
CN284
CN285
CN286
CN287
CN288
CN289
CN290
CN291
CN292
CN293
CN294
CN295
CN296
CN297
CN298
CN299
CN300
CN301
CN302
CN303
CN304
CN305
CN306
CN307
CN308
CN309
CN310
CN311
CN312
CN313
CN314
CN315
CN316
CN317
CN318
CN319
CN320
CN321
CN322
CN323
CN324
CN325
CN326
CN327
CN328
CN329
CN330
CN331
CN332
CN333
CN334
CN335
CN336
CN337
CN338
CN339
CN340
CN341
CN342
CN343
CN344
CN345
CN346
CN347
CN348
CN349
CN350
CN351
CN352
CN353
CN354
CN355
CN356
CN357
CN358
CN359
CN360
CN361
CN362
CN363
CN364
CN365
CN366
CN367
CN368
CN369
CN370
CN371
CN372
CN373
CN374
CN375
CN376
CN377
CN378
CN379
CN380
CN381
CN382
CN383
CN384
CN385
CN386
CN387
CN388
CN389
CN390
CN391
CN392
CN393
CN394
CN395
CN396
CN397
CN398
CN399
CN400
CN401
CN402
CN403
CN404
CN405
CN406
CN407
CN408
CN409
CN410
CN411
CN412
CN413
CN414
CN415
CN416
CN417
CN418
CN419
CN420
CN421
CN422
CN423
CN424
CN425
CN426
CN427
CN428
CN429
CN430
CN431
CN432
CN433
CN434
CN435
CN436
CN437
CN438
CN439
CN440
CN441
CN442
CN443
CN444
CN445
CN446
CN447
CN448
CN449
CN450
CN451
CN452
CN453
CN454
CN455
CN456
CN457
CN458
CN459
CN460
CN461
CN462
CN463
CN464
CN465
CN466
CN467
CN468
CN469
CN470
CN471
CN472
CN473
CN474
CN475
CN476
CN477
CN478
CN479
CN480
CN481
CN482
CN483
CN484
CN485
CN486
CN487
CN488
CN489
CN490
CN491
CN492
CN493
CN494
CN495
CN496
CN497
CN498
CN499
CN500
CN501
CN502
CN503
CN504
CN505
CN506
CN507
CN508
CN509
CN510
CN511
CN512
CN513
CN514
CN515
CN516
CN517
CN518
CN519
CN520
CN521
CN522
CN523
CN524
CN525
CN526
CN527
CN528
CN529
CN530
CN531
CN532
CN533
CN534
CN535
CN536
CN537
CN538
CN539
CN540
CN541
CN542
CN543
CN544
CN545
CN546
CN547
CN548
CN549
CN550
CN551
CN552
CN553
CN554
CN555
CN556
CN557
CN558
CN559
CN560
CN561
CN562
CN563
CN564
CN565
CN566
CN567
CN568
CN569
CN570
CN571
CN572
CN573
CN574
CN575
CN576
CN577
CN578
CN579
CN580
CN581
CN582
CN583
CN584
CN585
CN586
CN587
CN588
CN589
CN590
CN591
CN592
CN593
CN594
CN595
CN596
CN597
CN598
CN599
CN600
CN601
CN602
CN603
CN604
CN605
CN606
CN607
CN608
CN609
CN610
CN611
CN612
CN613
CN614
CN615
CN616
CN617
CN618
CN619
CN620
CN621
CN622
CN623
CN624
CN625
CN626
CN627
CN628
CN629
CN630
CN631
CN632
CN633
CN634
CN635
CN636
CN637
CN638
CN639
CN640
CN641
CN642
CN643
CN644
CN645
CN646
CN647
CN648
CN649
CN650
CN651
CN652
CN653
CN654
CN655
CN656
CN657
CN658
CN659
CN660
CN661
CN662
CN663
CN664
CN665
CN666
CN667
CN668
CN669
CN670
CN671
CN672
CN673
CN674
CN675
CN676
CN677
CN678
CN679
CN680
CN681
CN682
CN683
CN684
CN685
CN686
CN687
CN688
CN689
CN690
CN691
CN692
CN693
CN694
CN695
CN696
CN697
CN698
CN699
CN700
CN701
CN702
CN703
CN704
CN705
CN706
CN707
CN708
CN709
CN710
CN711
CN712
CN713
CN714
CN715
CN716
CN717
CN718
CN719
CN720
CN721
CN722
CN723
CN724
CN725
CN726
CN727
CN728
CN729
CN730
CN731
CN732
CN733
CN734
CN735
CN736
CN737
CN738
CN739
CN740
CN741
CN742
CN743
CN744
CN745
CN746
CN747
CN748
CN749
CN750
CN751
CN752
CN753
CN754
CN755
CN756
CN757
CN758
CN759
CN760
CN761
CN762
CN763
CN764
CN765
CN766
CN767
CN768
CN769
CN770
CN771
CN772
CN773
CN774
CN775
CN776
CN777
CN778
CN779
CN780
CN781
CN782
CN783
CN784
CN785
CN786
CN787
CN788
CN789
CN790
CN791
CN792
CN793
CN794
CN795
CN796
CN797
CN798
CN799
CN800
CN801
CN802
CN803
CN804
CN805
CN806
CN807
CN808
CN809
CN810
CN811
CN812
CN813
CN814
CN815
CN816
CN817
CN818
CN819
CN820
CN821
CN822
CN823
CN824
CN825
CN826
CN827
CN828
CN829
CN830
CN831
CN832
CN833
CN834
CN835
CN836
CN837
CN838
CN839
CN840
CN841
CN842
CN843
CN844
CN845
CN846
CN847
CN848
CN849
CN850
CN851
CN852
CN853
CN854
CN855
CN856
CN857
CN858
CN859
CN860
CN861
CN862
CN863
CN864
CN865
CN866
CN867
CN868
CN869
CN870
CN871
CN872
CN873
CN874
CN875
CN876
CN877
CN878
CN879
CN880
CN881
CN882
CN883
CN884
CN885
CN886
CN887
CN888
CN889
CN890
CN891
CN892
CN893
CN894
CN895
CN896
CN897
CN898
CN899
CN900
CN901
CN902
CN903
CN904
CN905
CN906
CN907
CN908
CN909
CN910
CN911
CN912
CN913
CN914
CN915
CN916
CN917
CN918
CN919
CN920
CN921
CN922
CN923
CN924
CN925
CN926
CN927
CN928
CN929
CN930
CN931
CN932
CN933
CN934
CN935
CN936
CN937
CN938
CN939
CN940
CN941
CN942
CN943
CN944
CN945
CN946
CN947
CN948
CN949
CN950
CN951
CN952
CN953
CN954
CN955
CN956
CN957
CN958
CN959
CN960
CN961
CN962
CN963
CN964
CN965
CN966
CN967
CN968
CN969
CN970
CN971
CN972
CN973
CN974
CN975
CN976
CN977
CN978
CN979
CN980
CN981
CN982
CN983
CN984
CN985
CN986
CN987
CN988
CN989
CN990
CN991
CN992
CN993
CN994
CN995
CN996
CN997
CN998
CN999
CN1000



— DIAGRAM 6/9 —

## — DIAGRAM 7/9 —

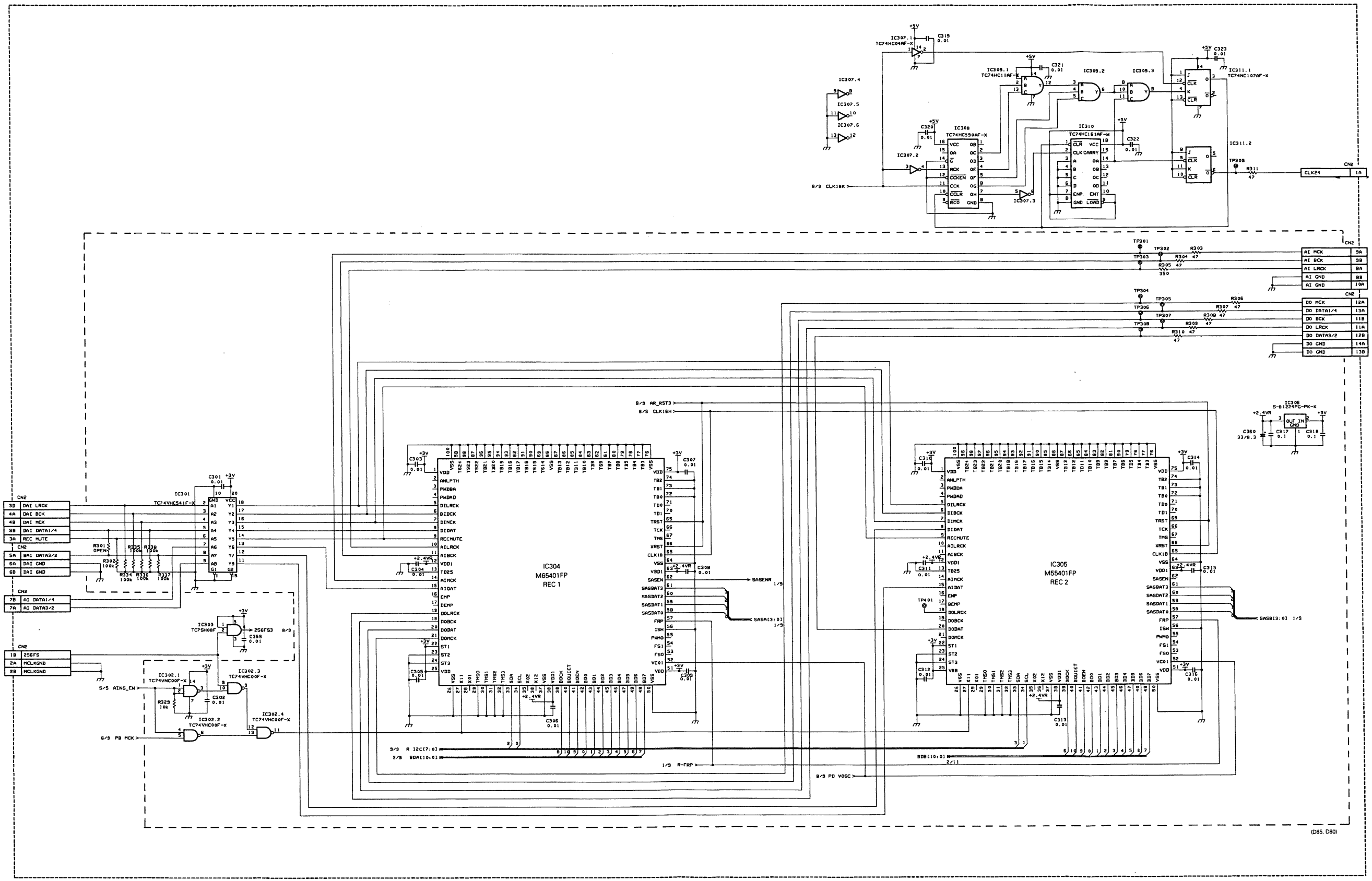
IC307.1 TC74HC04AF-X
IC307.4
IC307.5
IC307.6
IC307.2
IC307.3
IC308 TC74HC590AF-X
IC309.1 TC74HC11AF-X
IC309.2
IC309.3
IC310 TC74HC161AF-W
IC311.1 TC74HC107AF-X
IC311.2
C315 0.01
C320 0.01
C321 0.01
C322 0.01
C323 0.01
8/9 CLK18K
TP305
R311 47
CN2 CLK24 1A
TP301
TP302
TP303
TP304
R303
R304 47
R305 47 350
R306
R307 47
R308 47
R309 47
R310 47
CN2 AI MCK 9A
AI BCK 9B
AI LRCK 8A
AI GND 8B
AI GND 10A
CN2 DO MCK 12A
DO DATA1/4 13A
DO BCK 11B
DO LRCK 11A
DO DATA3/2 12B
DO GND 14A
DO GND 13B
8/9 AR_RST3
6/9 CLK16H
IC306 S-81224PG-PK-K
+2.4VR
C360 33/8.3
C317 0.1
C318 0.1
IC304 M65401FP REC 1
IC305 M55401FP REC 2
C301 0.01
C302 0.01
C303 0.01
C304 0.01
C305 0.01
C306 0.01
C307 0.01
C308 0.01
C309 0.01
C310 0.01
C311 0.01
C312 0.01
C313 0.01
C314 0.01
C315 0.01
C316 0.01
SASENR 1/9
SASA[3:0] 1/9
SASB[3:0] 1/9
R-FRP 1/9
5/9 R I2C[7:0]
2/9 BDA[10:0]
B2B[10:0] 2/11
8/9 PD VOSC
TP401
IC301 TC74VHC541F-X
IC303 TC7SH08F
IC302.1 TC74VHC00F-X
IC302.2 TC74VHC00F-X
IC302.3 TC74VHC00F-X
IC302.4 TC74VHC00F-X
R301 OPEN
R302 100k
R334 100k
R335 100k
R336 100k
R338 100k
R327 100k
R325 10k
C359 0.01
C302 0.01
256FS3 8/9
5/5 AINS_EN
6/8 PB MCK
CN2 3D DAI LRCK
4A DAI BCK
4B DAI MCK
5B DAI DATA1/4
3A REC MUTE
5A DAI DATA3/2
6A DAI GND
6B DAI GND
7B AI DATA1/4
7A AI DATA3/2
1B 256FS
2A MCLKGND
2B MCLKGND
(D85, D80)

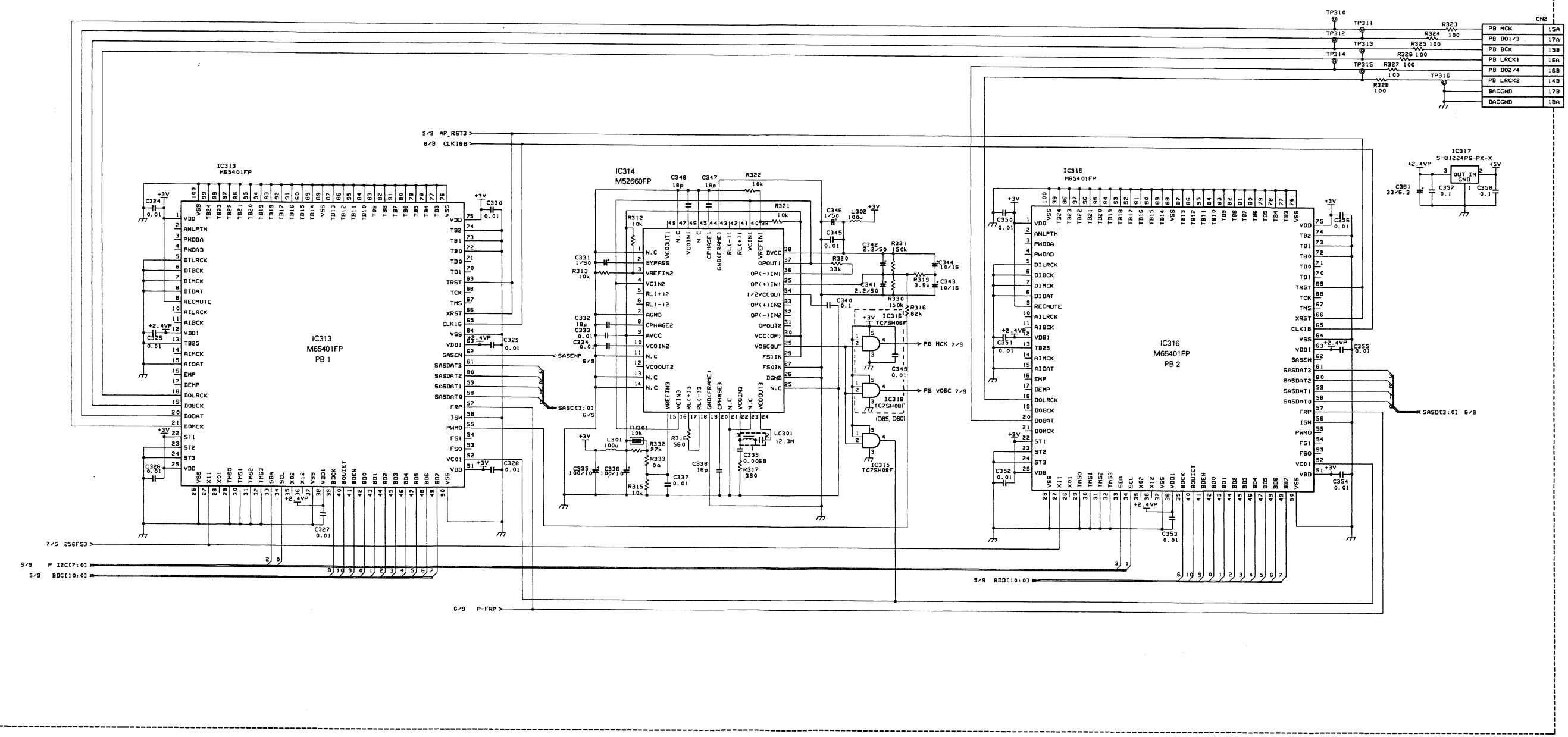
IC313
M65401FP
PB 1
IC316
M65401FP
PB 2
IC314
M52660FP
IC317
S-81224PG-PX-X
CN2
PB MCK 15A
PB DOI/3 17A
PB BCK 15B
PB LRCK1 16A
PB DO2/4 16B
PB LRCK2 14B
BACGND 17B
DACGND 18A
5/9 AP_RST3
8/8 CLK18B
SASCK[3:0] 6/9
SASDI[3:0] 6/9
SASDO[3:0] 6/9
SASENP 6/9
P-FRP 6/9
7/5 256FS3
9/8 P 12C[7:0]
5/9 BDC[10:0]
5/8 BDD[10:0]
PB MCK 7/9
PB VOSC 7/9
(DB5, DB0)

## — DIAGRAM 9/9 —

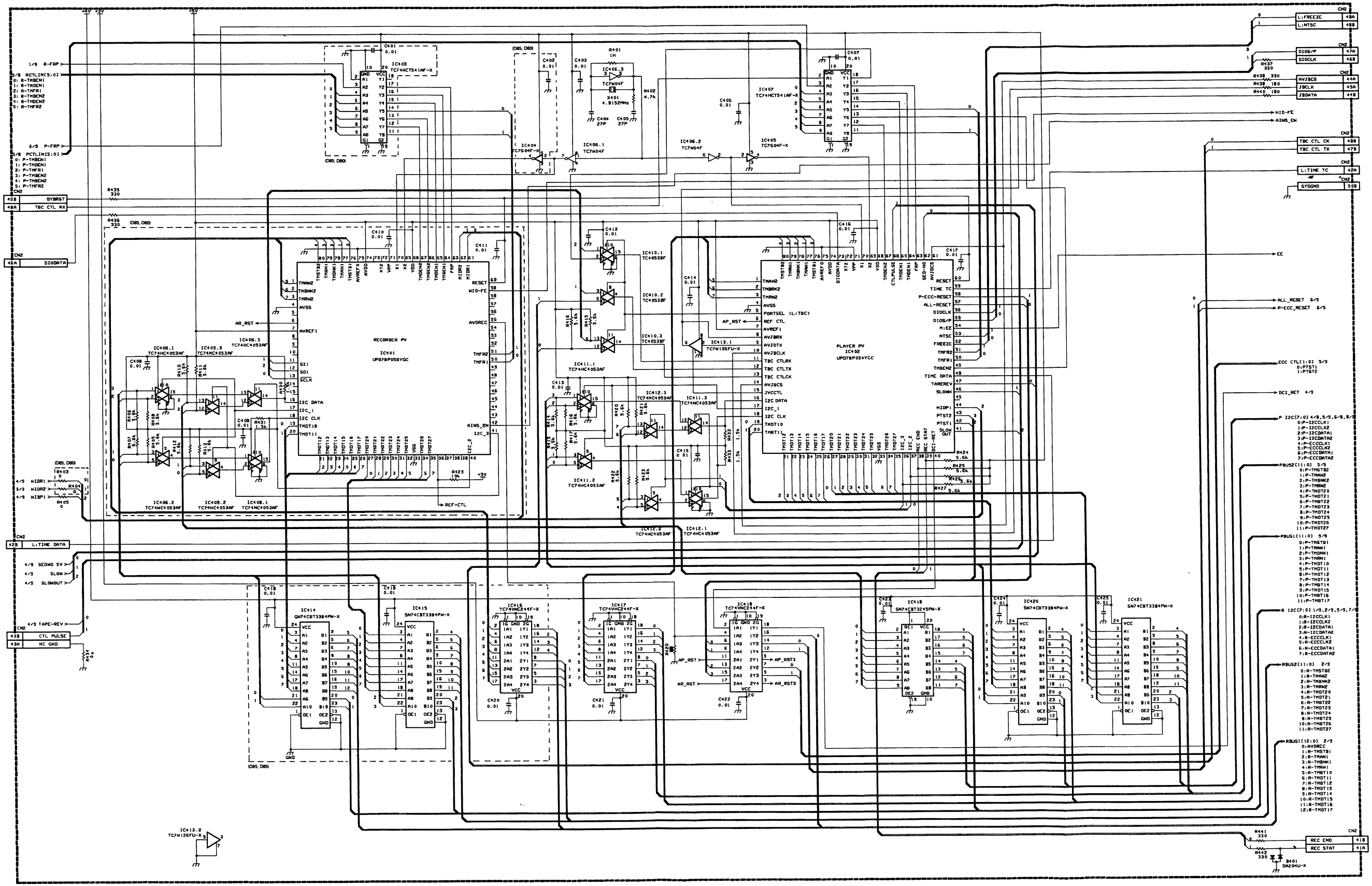
+5V
+3V
1/8 R-FRP
1/8 RCTLIN[5:0]
0: R-TMBEN1
1: R-TMOEN1
2: R-TMFR1
3: R-TMBEN2
4: R-TMOEN2
5: R-TMFR2
E/8 P-FRP
E/8 PCTLIN[5:0]
0: P-TMBEN1
1: P-TMOEN1
2: P-TMFR1
3: P-TMBEN2
4: P-TMOEN2
5: P-TMFR2
CN2 45B SYSRST
CN2 48A TBC CTL RX
CN2 46A DIODATA
CN2 42B L:TIME DATA
4/8 SECOND 5V
4/8 SLOW
4/8 SLOWOUT
4/8 TAPE-REV
CN2 43B CTL PULSE
43A NC GND
4/8 W1DR1
4/8 W1DR2
4/8 W1BP1
RECORDER PV IC401 UPD78P05BYGC
PLAYER PV IC402 UPD78P054YCC
X401 4.8152MHz
AR_RST
AP_RST
REF-CTL
REF CTL
PORTSEL (L:TBC)
RESET
WID-FE
AVDREC
AINS_EN
I2C_1
I2C_2
I2C_3
I2C DATA
I2C CLK
SCLK
SDA
SCL
TIME TC
P-ECC-RESET
ALL-RESET
DIOCLK
DIOS/P
M:EE
NTSC
FREEZE
TMFR2
TMFR1
TMBEN2
TIME DATA
TAREREV
SLOWH
MIDP1
PTST2
PTST1
SLOW OUT
REC END
REC STAT
CN2 48A L:FREEZE
CN2 48B L:NTSC
CN2 47A DIOS/P
CN2 46B DIOCLK
CN2 44A AVJBCS
CN2 45A JBCLK
CN2 44B JBDATA
MID-FE
AINS_EN
CN2 48B TBC CTL CK
CN2 47B TBC CTL TX
CN2 42A L:TIME TC
CN2 50B SYSGND
EE
ALL_RESET 6/9
P-ECC_RESET 6/9
ECC CTL[1:0] 5/9
0:PTST1
1:PTST2
DCI_RET 4/9
P I2C[7:0] 4/8,5/9,6/8,8/9
0:P-I2CCLK1
1:P-I2CCLK2
2:P-I2CDATA1
3:P-I2CDATA2
4:P-ECCCLK1
5:P-ECCCLK2
6:P-ECCDATA1
7:P-ECCDATA2
PBUS2[11:0] 5/9
0:P-TMSTB2
1:P-TMAN2
2:P-TMBNK2
3:P-TMRN2
4:P-TMDT20
5:P-TMDT21
6:P-TMDT22
7:P-TMDT23
8:P-TMDT24
9:P-TMDT25
10:P-TMDT26
11:P-TMDT27
PBUS1[11:0] 5/9
0:P-TMSTB1
1:P-TMAN1
2:P-TMBNK1
3:P-TMRN1
4:P-TMDT10
5:P-TMDT11
6:P-TMDT12
7:P-TMDT13
8:P-TMDT14
9:P-TMDT15
10:P-TMDT16
11:P-TMDT17
R I2C[7:0] 1/8,2/8,3/8,7/8
0:R-I2CCLK1
1:R-I2CCLK2
2:R-I2CDATA1
3:R-I2CDATA2
4:R-ECCCLK1
5:R-ECCCLK2
6:R-ECCDATA1
7:R-ECCDATA2
RBUS2[11:0] 2/8
0:R-TMSTB2
1:R-TMAN2
2:R-TMBNK2
3:R-TMRN2
4:R-TMDT20
5:R-TMDT21
6:R-TMDT22
7:R-TMDT23
8:R-TMDT24
9:R-TMDT25
10:R-TMDT26
11:R-TMDT27
RBUS1[12:0] 2/8
0:AVDREC
1:R-TMSTB1
2:R-TMAN1
3:R-TMBNK1
4:R-TMRN1
5:R-TMDT10
6:R-TMDT11
7:R-TMDT12
8:R-TMDT13
9:R-TMDT14
10:R-TMDT15
11:R-TMDT16
12:R-TMDT17
CN2 41B REC END
41A REC STAT
D401 DA204U-X
IC403 TC74HCT541AF-X
IC404 TC7S04F-X
IC405 TC7S04F-X
IC406.1 TC7W04F
IC406.2 TC7W04F
IC406.3 TC7W04F
IC407 TC74HCT541AF-X
IC408.1 TC74HC4053AF
IC408.2 TC74HC4053AF
IC408.3 TC74HC4053AF
IC409.1 TC74HC4053AF
IC409.2 TC74HC4053AF
IC409.3 TC74HC4053AF
IC410.1 TC4053BF
IC410.2 TC4053BF
IC410.3 TC4053BF
IC411.1 TC74HC4053AF
IC411.2 TC74HC4053AF
IC411.3 TC74HC4053AF
IC412.1 TC74HC4053AF
IC412.2 TC74HC4053AF
IC412.3 TC74HC4053AF
IC413.1 TC7W126FU-X
IC413.2 TC7W126FU-X
IC414 GN74CBT3384PM-X
IC415 SN74CBT3384PM-X
IC416 TC74HC244F-X
IC417 TC74HC244F-X
IC418 TC74HC244F-X
IC418 SN74CBT3245PM-X
IC420 SN74CBT3384PM-X
IC421 SN74CBT3384PM-X
(D85, D80)
(D85, D89)

## 4.25 PV PROCESS CIRCUIT BOARD

**— SIDE A —**

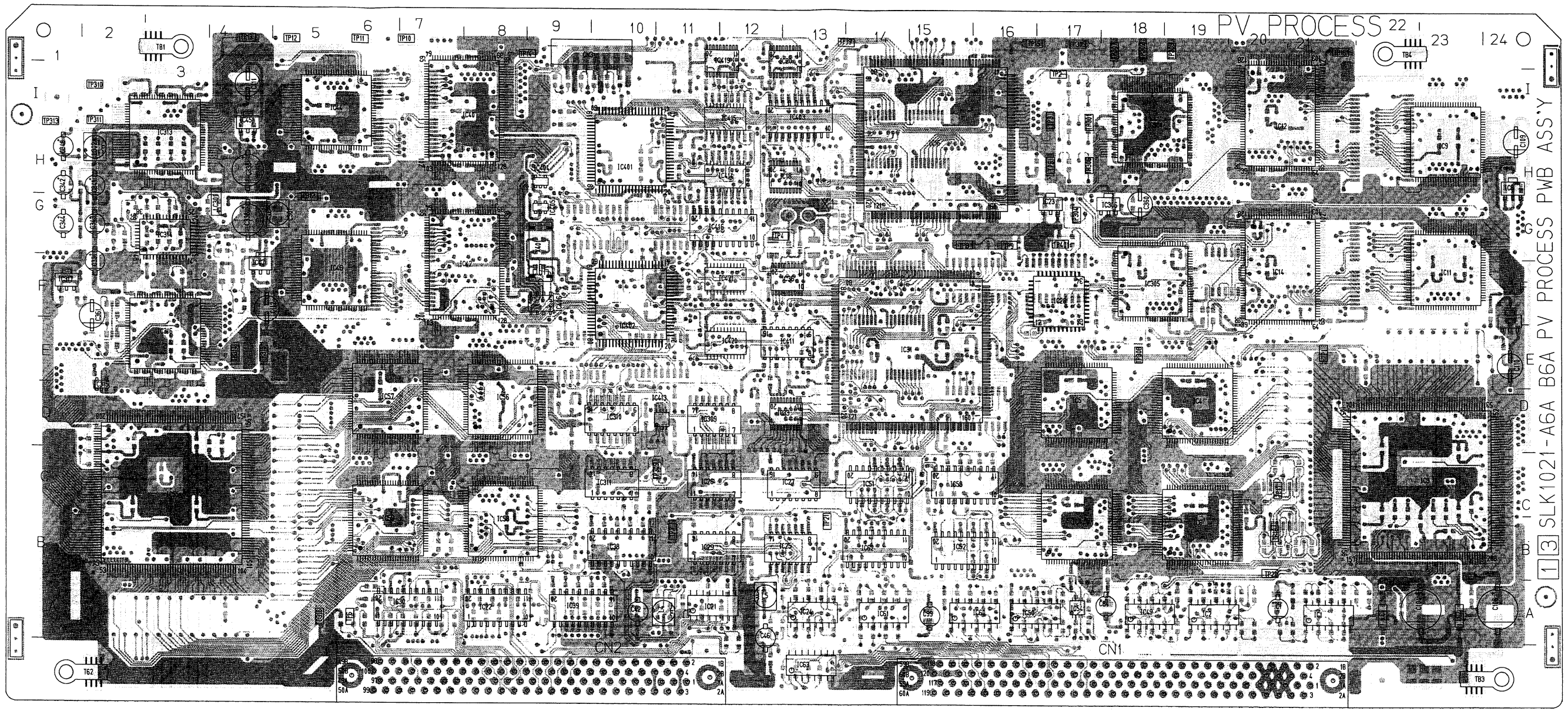


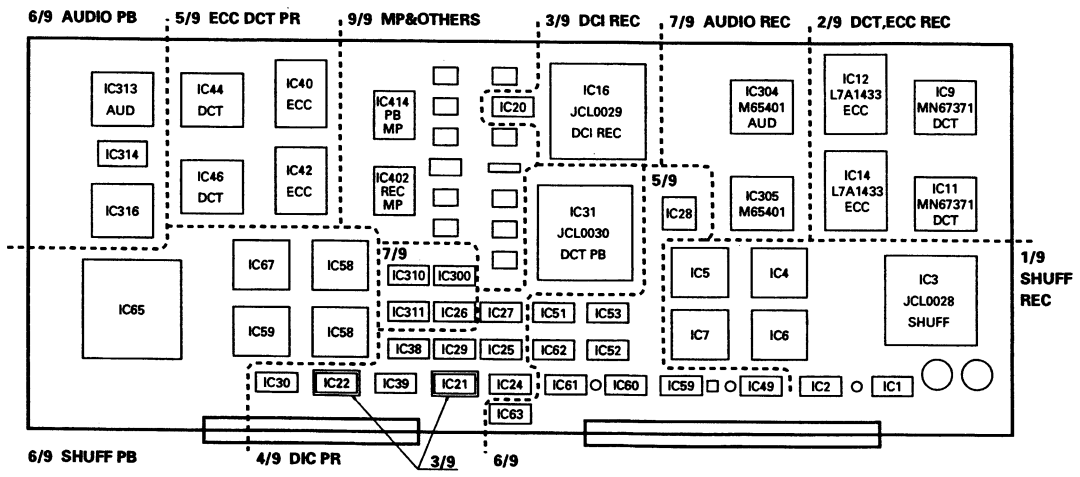


## ● ADDRESS TABLE OF BOARD PARTS

Each address may have an address error by one interval.

A-1C
Side — | | — Y axis
X axis

| | | | | | | | | | | | | | | | | | | | | | | | |
|---|---|---|---|---|---|---|---|---|---|---|---|---|---|---|---|---|---|---|---|---|---|---|---|
| IC1 | A- 21A | IC22 | A- 8A | IC43 | B- 7F | IC64 | B- 20C | IC403 | A- 12I | | | R19 | B- 20B | R40 | B- 8A | R61 | B- 6A | R82 | B- 9A | R103 | B- 18A |
| IC2 | A- 19A | IC23 | A- 17G | IC44 | A- 6I | IC301 | B- 16F | IC404 | A- 9H | D401 | B- 9B | R20 | B- 19B | R41 | B- 8A | R62 | B- 7A | R83 | B- 9B | R104 | B- 18A |
| IC3 | A- 22C | IC24 | A- 13A | IC45 | A- 4I | IC302 | B- 19F | IC405 | A- 9G | | | R21 | B- 20B | R42 | B- 8A | R63 | B- 7A | R84 | B- 9A | R105 | B- 18A |
| IC4 | A- 19D | IC25 | A- 12B | IC46 | A- 6F | IC303 | B- 19F | IC406 | A- 9F | R1 | B- 20A | R22 | B- 19B | R43 | B- 8A | R64 | B- 7A | R85 | B- 9B | R106 | B- 18A |
| IC5 | A- 17D | IC26 | A- 11C | IC47 | A- 4G | IC304 | A- 18I | IC407 | B- 9G | R2 | B- 21A | R23 | B- 19B | R44 | B- 8A | R65 | B- 6B | R86 | B- 10A | R107 | B- 16A |
| IC6 | A- 19C | IC27 | A- 12C | IC48 | B- 12B | IC305 | A- 18F | IC408 | B- 11H | R3 | B- 20A | R24 | B- 19B | R45 | B- 8A | R66 | B- 7A | R87 | B- 10B | R108 | B- 16A |
| IC7 | A- 17C | IC28 | A- 17F | IC49 | A- 18A | IC306 | A- 17G | IC409 | B- 11I | R4 | B- 21A | R25 | B- 21E | R46 | B- 9A | R67 | B- 7A | R88 | B- 10A | R109 | B- 17A |
| IC8 | A- 24H | IC29 | A- 11B | IC50 | A- 16A | IC307 | B- 9D | IC410 | B- 9E | R5 | B- 21A | R26 | B- 22C | R47 | B- 12A | R68 | B- 7A | R89 | B- 15C | R110 | B- 16A |
| IC9 | A- 23H | IC30 | A- 6A | IC51 | A- 14C | IC308 | B- 11D | IC411 | A- 12E | R6 | B- 21A | R27 | B- 23C | R48 | B- 13A | R69 | B- 7A | R90 | B- 15C | R111 | B- 17A |
| IC10 | A- 24F | IC31 | A- 14E | IC52 | A- 15B | IC309 | A- 11D | IC412 | B- 12I | R7 | B- 21B | R28 | B- 23C | R49 | B- 12A | R70 | B- 7A | R91 | B- 16C | R112 | B- 17B |
| IC11 | A- 23G | IC32 | B- 13D | IC53 | A- 15C | IC310 | A- 9D | IC413 | A- 10D | R8 | B- 21B | R29 | B- 22C | R50 | B- 13A | R71 | B- 7A | R92 | B- 16C | R113 | B- 16A |
| IC12 | A- 20I | IC33 | A- 12D | IC54 | A- 17A | IC311 | A- 9C | IC414 | A- 11H | R9 | B- 21B | R30 | B- 22C | R51 | B- 13A | R72 | B- 7A | R93 | B- 15C | R114 | B- 17A |
| IC13 | B- 22H | IC34 | B- 15D | IC55 | A- 3C | IC313 | A- 3H | IC415 | A- 11I | R10 | B- 21B | R31 | B- 23C | R52 | B- 13A | R73 | B- 10B | R94 | B- 15C | R115 | B- 17A |
| IC14 | A- 20G | IC35 | B- 13F | IC56 | A- 8D | IC314 | A- 3G | IC416 | A- 11G | R11 | B- 21B | R32 | B- 13G | R53 | B- 13B | R74 | B- 10C | R95 | B- 17A | R116 | B- 16A |
| IC15 | B- 22F | IC36 | A- 12F | IC57 | A- 6D | IC315 | A- 2E | IC417 | B- 10E | R12 | B- 21B | R33 | B- 13G | R54 | B- 13B | R75 | B- 10C | R96 | B- 17A | R117 | B- 20D |
| IC16 | A- 15H | IC37 | B- 15F | IC58 | A- 8C | IC316 | A- 3E | IC418 | B- 10G | R13 | B- 19A | R34 | B- 12A | R55 | B- 13B | R76 | B- 10C | R97 | B- 18A | R118 | B- 20B |
| IC17 | B- 14H | IC38 | A- 9B | IC59 | A- 6C | IC317 | A- 1F | IC419 | A- 11I | R14 | B- 19A | R35 | B- 12A | R56 | B- 13B | R77 | B- 10C | R98 | B- 18A | R119 | B- 20D |
| IC18 | A- 12H | IC39 | A- 9A | IC60 | A- 15A | IC318 | B- 2E | IC420 | A- 11E | R15 | B- 19A | R36 | B- 12B | R57 | B- 13B | R78 | B- 10C | R99 | B- 19A | R120 | B- 21B |
| IC19 | B- 14I | IC40 | A- 8I | IC61 | A- 14A | IC319 | B- 2F | IC421 | A- 11F | R16 | B- 20A | R37 | B- 11A | R58 | B- 12B | R79 | B- 10C | R100 | B- 18A | R121 | B- 20B |
| IC20 | A- 12I | IC41 | B- 7H | IC62 | A- 13B | IC401 | A- 10H | | | R17 | B- 19A | R38 | B- 11A | R59 | B- 6A | R80 | B- 10C | R101 | B- 18A | R122 | B- 20B |
| IC21 | A- 11A | IC42 | A- 8G | IC63 | A- 13A | IC402 | A- 10F | Q1 | B- 14B | R18 | B- 20A | R39 | B- 11B | R60 | B- 6A | R81 | B- 9B | R102 | B- 18B | R123 | B- 14C |


4-48

— SIDE B —

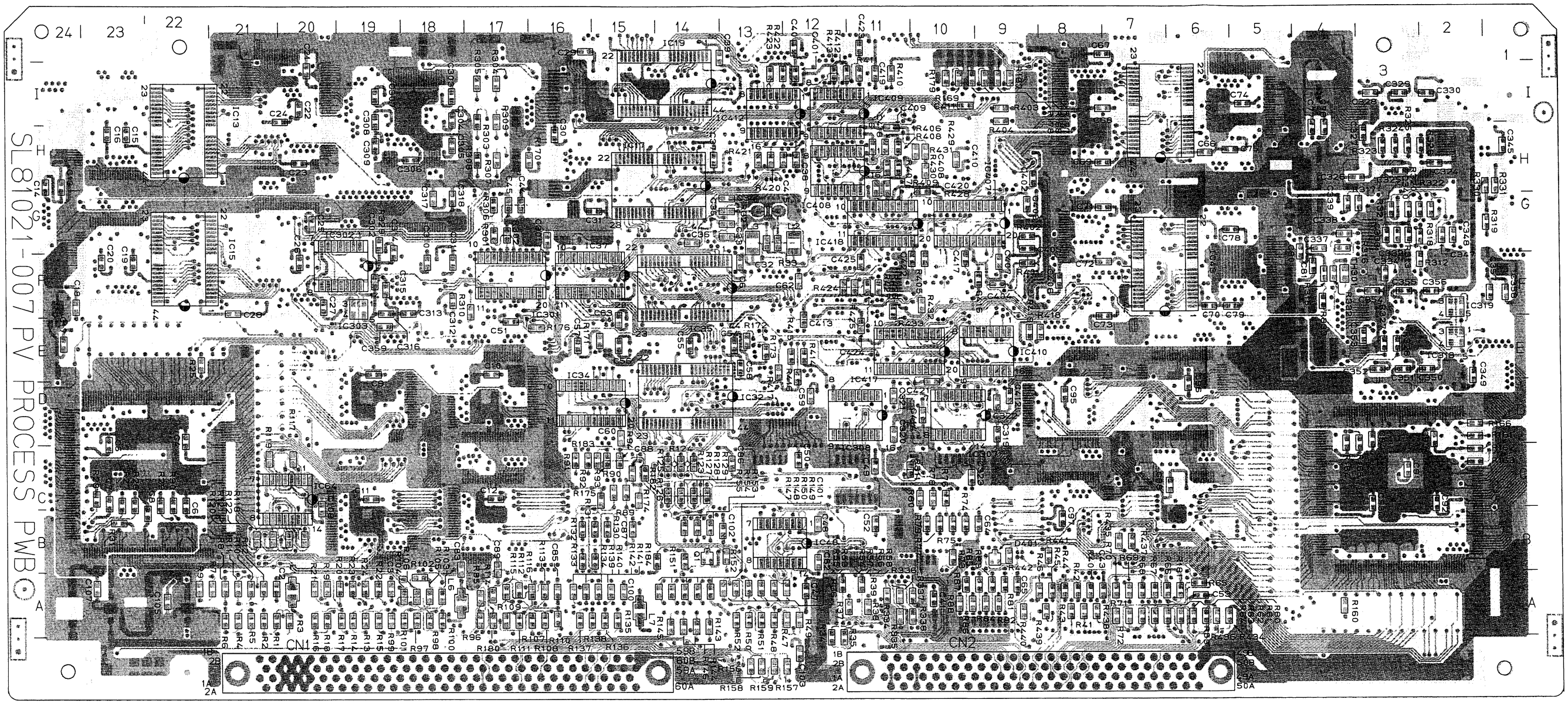


| | | | | | | | | | | | | | | | | | | | | | | | | | | | | | |
|---|---|---|---|---|---|---|---|---|---|---|---|---|---|---|---|---|---|---|---|---|---|---|---|---|---|---|---|---|---|
| R124 | B- 14C | R145 | B- 14A | R166 | B- 2D | R303 | B- 17I | R325 | B- 3H | R408 | B- 11H | R429 | B- 10H | C7 | B- 23C | C28 | B- 21F | C49 | B- 11C | C70 | B- 6F | C91 | B- 3C | C112 | A- 5F | C321 | B- 11D | C342 | A- 1H | C402 | B- 9H | C423 | B- 11I | TP8 | A- 15G | TP308 | A- 18E | TB3 | A- 24A |
| R125 | B- 14C | R148 | B- 14A | R167 | B- 9I | R304 | B- 17I | R326 | B- 3H | R409 | B- 11H | R430 | B- 10H | C8 | B- 22C | C29 | B- 16I | C50 | B- 12C | C71 | B- 8G | C92 | B- 2C | C301 | B- 16G | C322 | B- 9D | C343 | A- 2G | C403 | B- 9G | C424 | B- 11F | TP9 | A- 16G | TP309 | A- 10C | TB4 | A- 22I |
| R126 | B- 14C | R147 | B- 14A | R168 | B- 9I | R305 | B- 17I | R327 | B- 3E | R410 | B- 11I | R431 | B- 10H | C9 | B- 19E | C30 | B- 16H | C51 | B- 17F | C72 | B- 8G | C93 | B- 3C | C302 | B- 19F | C323 | B- 10C | C344 | A- 1G | C404 | B- 9F | C425 | B- 11G | TP10 | A- 7I | TP310 | A- 2I | | |
| R127 | B- 14C | R148 | B- 14A | R169 | B- 10I | R306 | B- 17G | R328 | B- 3E | R411 | B- 11I | R432 | B- 10F | C10 | B- 17E | C31 | B- 15G | C52 | B- 11C | C73 | B- 8F | C94 | B- 3D | C303 | B- 18I | C324 | B- 2H | C345 | B- 1H | C405 | B- 9G | | | TP11 | A- 6I | TP311 | A- 2I | TH301 | B- 4F |
| R128 | B- 14C | R149 | B- 14A | R170 | B- 16H | R307 | B- 17H | R329 | B- 19G | R412 | B- 11I | R433 | B- 11F | C11 | B- 19C | C32 | B- 13G | C53 | B- 6A | C74 | B- 5I | C95 | B- 8D | C304 | B- 18I | C325 | B- 3H | C346 | A- 1H | C408 | B- 8F | L1 | B- 20A | TP12 | A- 5I | TP312 | A- 5H | | |
| R129 | B- 14C | R150 | B- 14A | R171 | B- 15E | R308 | B- 17H | R330 | B- 2H | R413 | B- 12I | R434 | B- 6A | C12 | B- 17C | C33 | B- 13G | C54 | B- 13E | C75 | B- 6H | C96 | B- 6E | C305 | B- 18H | C326 | B- 4H | C347 | B- 2G | C407 | B- 9G | L2 | B- 12G | TP13 | A- 4I | TP313 | A- 1I | X1 | A- 13G |
| R130 | B- 15B | R151 | B- 14B | R172 | B- 13E | R309 | B- 17I | R331 | B- 2H | R414 | B- 12E | R435 | B- 7B | C13 | B- 24H | C34 | B- 13G | C55 | B- 14E | C76 | B- 4I | C97 | B- 8C | C306 | B- 18H | C327 | B- 4H | C348 | B- 2G | C408 | B- 11H | L3 | B- 13G | TP14 | A- 9I | TP314 | A- 4E | X401 | A- 9G |
| R131 | B- 15B | R152 | B- 13B | R173 | B- 13E | R310 | B- 17F | R332 | B- 4F | R415 | B- 12E | R436 | B- 6A | C14 | B- 24H | C35 | B- 13G | C56 | B- 15E | C77 | B- 4I | C98 | B- 7C | C307 | B- 19I | C328 | B- 3I | C349 | B- 2E | C409 | B- 11I | L4 | A- 11A | TP15 | A- 16I | TP315 | A- 4E | | |
| R132 | B- 16B | R153 | B- 14B | R174 | B- 15C | R311 | B- 11C | R333 | B- 4F | R416 | B- 12E | R437 | B- 7B | C15 | B- 23H | C36 | B- 14G | C57 | B- 16E | C78 | B- 6G | C99 | A- 15A | C308 | B- 19I | C329 | B- 3I | C350 | B- 3E | C410 | B- 10H | L5 | A- 12A | TP16 | A- 21I | TP316 | A- 5A | | |
| R133 | B- 16B | R154 | B- 14B | R175 | B- 15C | R312 | B- 3G | R334 | B- 11A | R417 | B- 13E | R438 | B- 8A | C16 | B- 23H | C37 | B- 14H | C58 | B- 13E | C79 | B- 6F | C100 | B- 15A | C309 | B- 19H | C330 | B- 3I | C351 | B- 3E | C411 | B- 10I | L6 | B- 17A | TP17 | A- 20C | TP401 | A- 17G | | |
| R134 | B- 15B | R155 | B- 14B | R176 | B- 16F | R313 | B- 3G | R335 | B- 11A | R418 | B- 9E | R439 | B- 8A | C17 | B- 24E | C38 | B- 12H | C59 | B- 12D | C80 | B- 5G | C101 | B- 14A | C310 | B- 18G | C331 | A- 2G | C352 | B- 3E | C412 | B- 9D | L7 | B- 15A | TP18 | A- 20B | | | | |
| R135 | B- 15A | R156 | B- 13A | R177 | B- 9I | R315 | B- 4F | R336 | B- 11A | R419 | B- 9E | R440 | B- 9A | C18 | B- 23F | C39 | B- 13I | C60 | B- 15D | C81 | B- 4F | C102 | B- 13B | C311 | B- 18G | C332 | B- 3G | C353 | B- 4E | C413 | B- 12F | L301 | A- 5G | TP19 | A- 13I | TP308 | A- 18E | CN1 | A- 18A |
| R136 | B- 15A | R157 | B- 12A | R178 | B- 10I | R316 | B- 4G | R337 | B- 10A | R420 | B- 13H | R441 | B- 8B | C19 | B- 22G | C40 | B- 12I | C61 | B- 13G | C82 | B- 12B | C103 | B- 12A | C312 | B- 18F | C333 | B- 3G | C354 | B- 3F | C414 | B- 10D | L302 | A- 2H | TP20 | A- 20B | TP309 | A- 10C | CN2 | A- 9A |
| R137 | B- 16A | R158 | B- 13A | R179 | B- 10I | R317 | B- 4G | R338 | B- 10A | R421 | B- 13H | R442 | B- 9B | C20 | B- 23G | C41 | B- 10A | C62 | B- 12F | C83 | B- 17B | C104 | A- 22A | C313 | B- 18F | C334 | B- 3F | C355 | B- 3F | C415 | B- 12H | | | TP21 | A- 13C | TP310 | A- 2I | CN3 | A- 9I |
| R138 | B- 15A | R159 | B- 13A | R180 | B- 17A | R318 | B- 3G | R401 | B- 9F | R422 | B- 12I | | | C21 | B- 20I | C42 | A- 10A | C63 | B- 15F | C84 | A- 17A | C105 | B- 22A | C314 | B- 18G | C335 | A- 4H | C358 | B- 3F | C416 | B- 9F | TP1 | A- 21E | TP301 | A- 17I | TP311 | A- 2I | | |
| R139 | B- 16A | R160 | B- 4A | R181 | B- 6A | R319 | B- 2G | R402 | B- 9G | R423 | B- 13I | C1 | A- 20A | C22 | B- 20I | C43 | B- 8A | C64 | B- 9C | C85 | B- 16A | C106 | A- 23A | C315 | B- 19F | C336 | A- 4G | C357 | B- 2F | C417 | B- 10G | TP2 | A- 17I | TP302 | A- 18I | TP312 | A- 5H | | |
| R140 | B- 16A | R161 | B- 2D | R182 | B- 15C | R320 | B- 3G | R403 | B- 9I | R424 | B- 12F | C2 | B- 20B | C23 | B- 20H | C44 | B- 17G | C65 | B- 9B | C86 | B- 13C | C107 | B- 23B | C316 | B- 19F | C337 | B- 4G | C358 | B- 1F | C418 | B- 11H | TP3 | A- 17I | TP303 | A- 18I | TP313 | A- 4I | | |
| R141 | B- 15A | R162 | B- 2D | R183 | B- 15C | R321 | B- 3G | R404 | B- 9I | R425 | B- 11F | C3 | B- 19B | C24 | B- 20I | C45 | B- 17G | C66 | B- 6H | C87 | B- 15B | C108 | B- 20C | C317 | B- 18G | C338 | B- 4G | C359 | B- 19F | C419 | B- 11I | TP4 | A- 12G | TP304 | A- 17G | TP314 | A- 9I | | |
| R142 | B- 15A | R163 | B- 2C | R164 | B- 14B | R322 | B- 3G | R405 | B- 10G | R426 | B- 11F | C4 | B- 22D | C25 | B- 20G | C46 | A- 12A | C67 | B- 8I | C88 | B- 15C | C109 | A- 24H | C318 | B- 18G | C339 | B- 4G | C360 | A- 18G | C420 | B- 11H | TP5 | A- 17H | TP305 | A- 17I | TP315 | A- 16I | | |
| R143 | B- 14A | R164 | B- 4D | R301 | B- 17G | R323 | B- 3H | R406 | B- 11H | R427 | B- 11F | C5 | B- 23D | C26 | B- 20G | C47 | B- 12A | C68 | B- 8I | C89 | B- 17B | C110 | A- 24E | C319 | B- 9D | C340 | B- 3G | C361 | A- 2F | C421 | B- 10E | TP6 | A- 6A | TP306 | A- 17H | TP316 | A- 21I | | |
| R144 | B- 14A | R165 | B- 4D | R302 | B- 17G | R324 | B- 3H | R407 | B- 11H | R428 | B- 10H | C6 | B- 22C | C27 | B- 20F | C48 | B- 12C | C69 | B- 8H | C90 | B- 2D | C111 | A- 4I | C320 | B- 11D | C341 | A- 2H | C401 | B- 12I | C422 | B- 10G | TP7 | A- 11B | TP307 | A- 18I | TB1 | A- 3I | TP401 | A- 17G |
| | | | | | | | | | | | | | | | | | | | | | | | | | | | | | | | | | | | | TB2 | A- 1A | | |


4-49

4-50

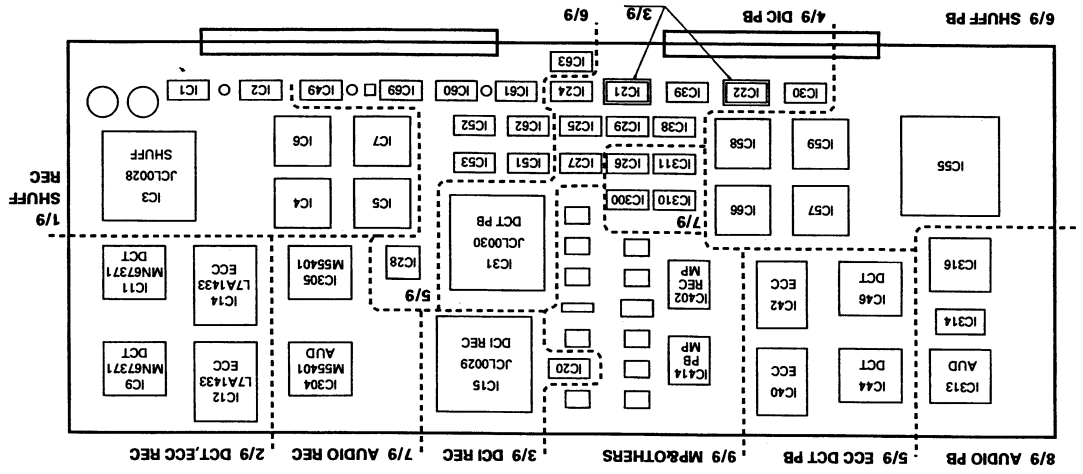


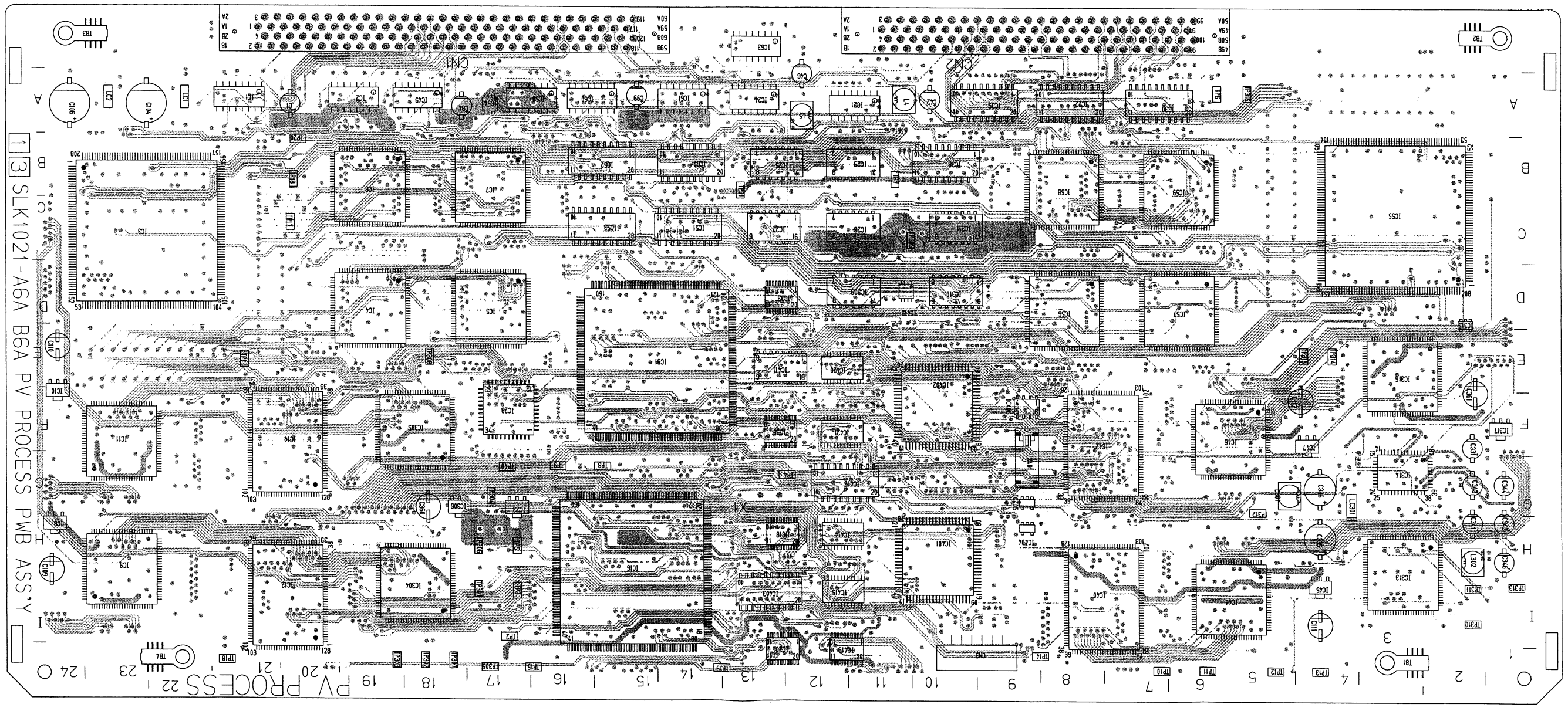


**— INNER PATTERN (SIDE A) —**

## — INNER PATTERN (SIDE B) —

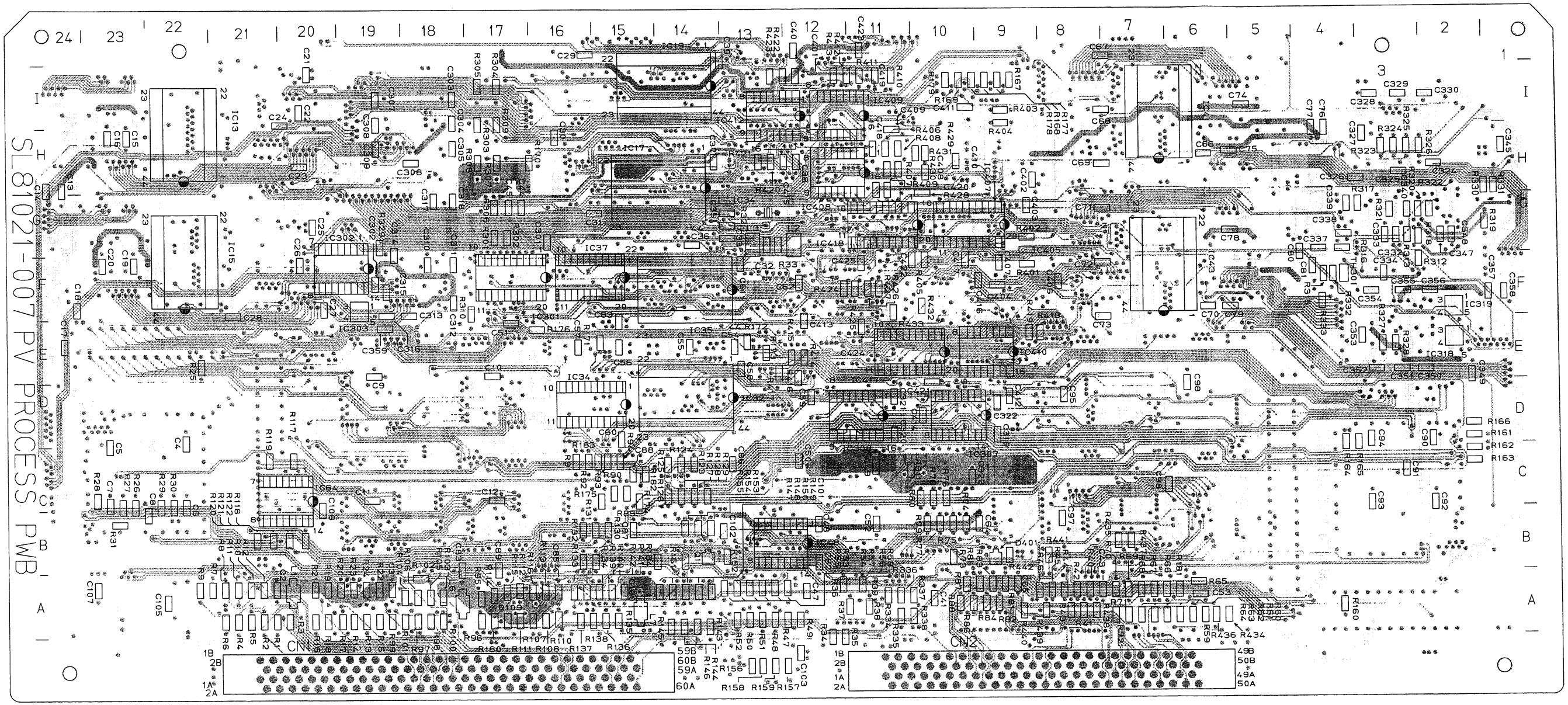



4-51

## 4.26 RF PROCESS-1 SCHEMATIC DIAGRAMS

### — DIAGRAM 1/2 —

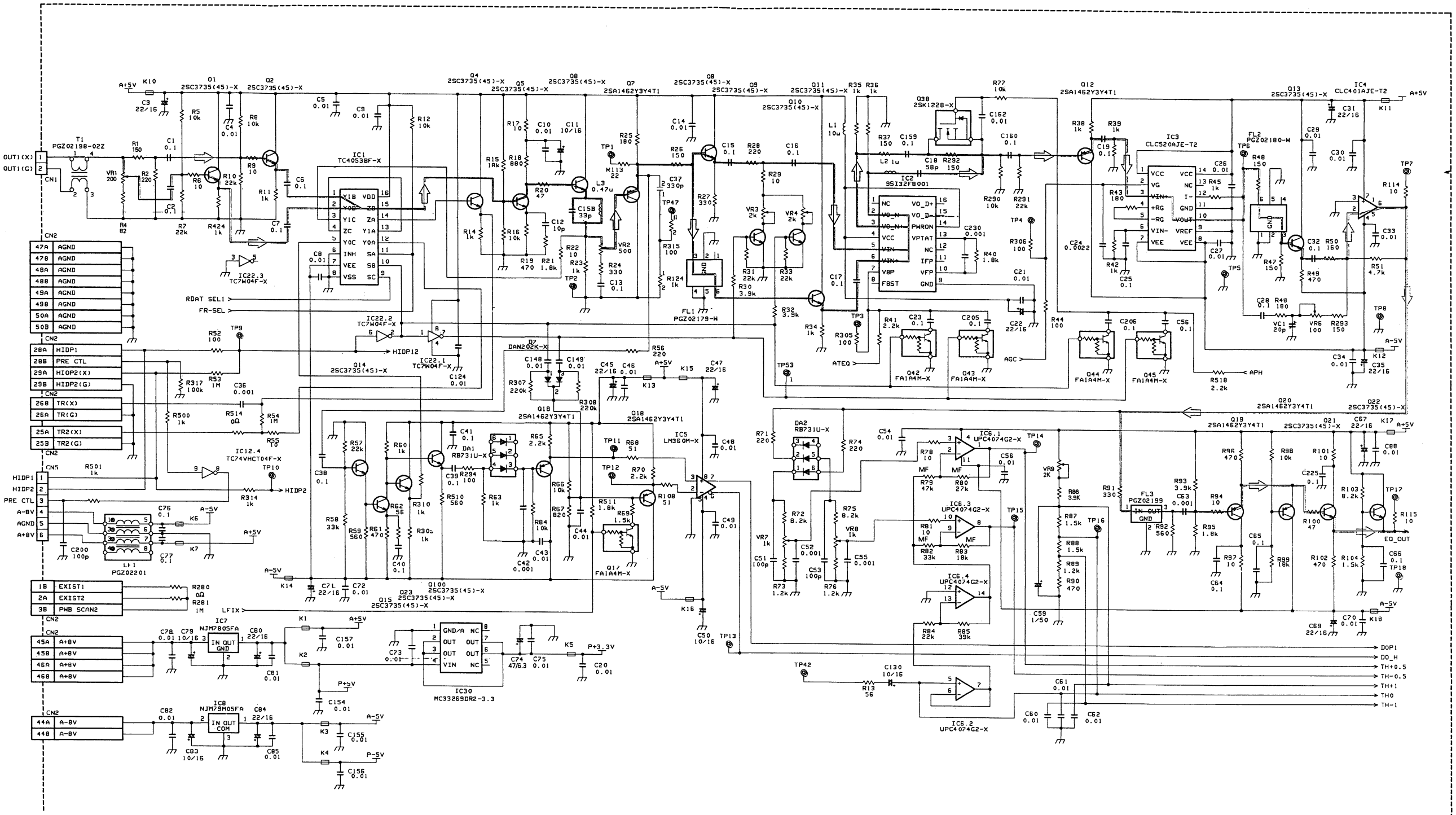

## — DIAGRAM 2/2 —

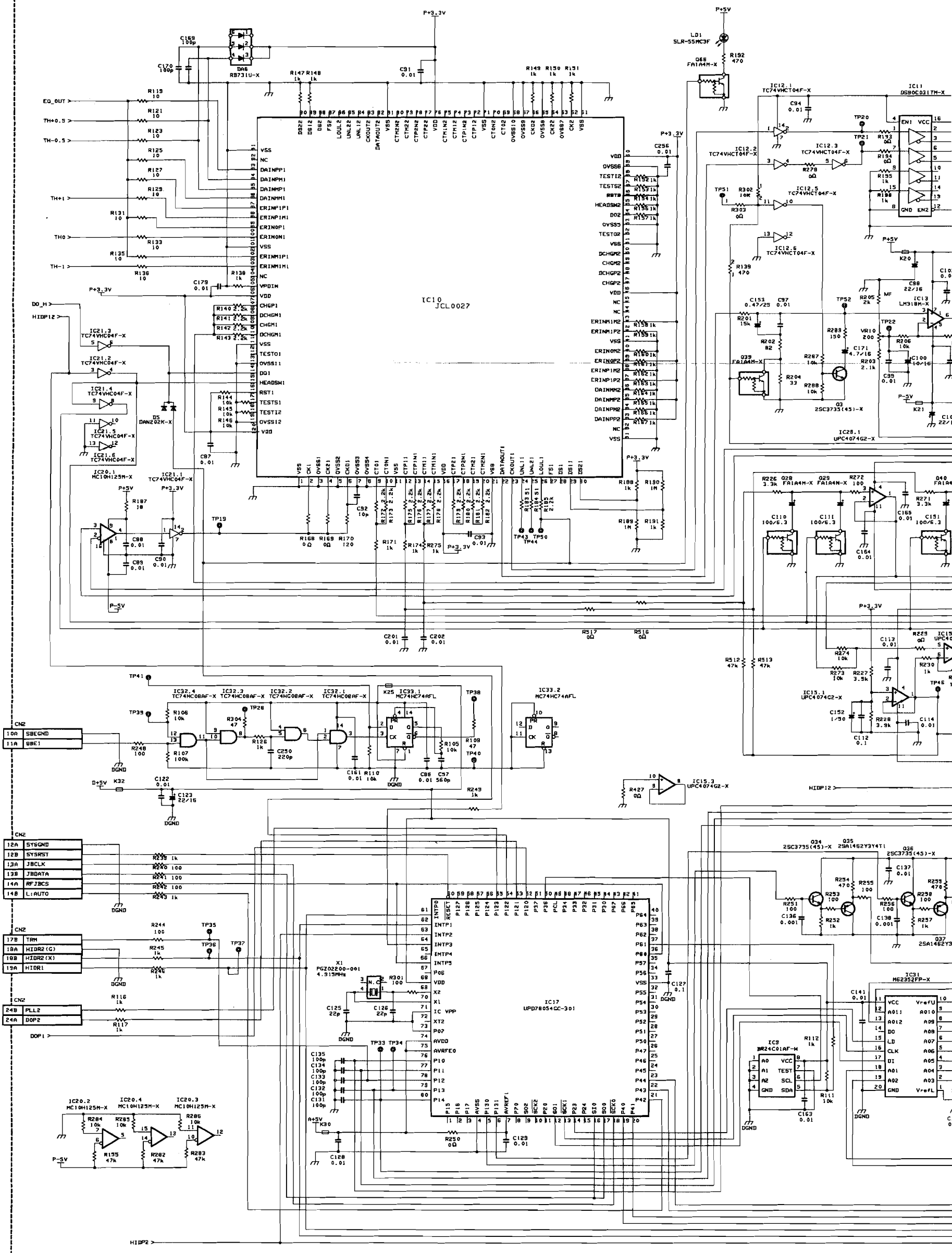
IC10
JCL0027
IC17
UPD78054GC-301
IC31
M62352FP-X
IC9
BR24C01AF-W
IC33.1
MC74HC74AFL
IC33.2
MC74HC74AFL
IC11
DS90C031TM-X
IC12.1
TC74VHCT04F-X
IC12.2
TC74VHCT04F-X
IC12.3
TC74VHCT04F-X
IC12.5
TC74VHCT04F-X
IC12.6
TC74VHCT04F-X
IC13
LM318M-X
IC15.1
UPC4074G2-X
IC15.3
UPC4074G2-X
IC21.1
TC74VHC04F-X
IC21.2
TC74VHC04F-X
IC21.3
TC74VHC04F-X
IC21.4
TC74VHC04F-X
IC21.5
TC74VHC04F-X
IC21.6
TC74VHC04F-X
IC20.1
MC10H125M-X
IC20.2
MC10H125M-X
IC20.3
MC10H125M-X
IC20.4
MC10H125M-X
IC28.1
UPC4074G2-X
IC32.1
TC74HC08AF-X
IC32.2
TC74HC08AF-X
IC32.3
TC74HC08AF-X
IC32.4
TC74HC08AF-X
X1
PGZ02200-001
4.915MHz
D5
DAN202K-X
DA6
RB731U-X
Q88
FA1A4M-X
Q39
FA1A4M-X
Q3
2SC3735(45)-X
Q28
FA1A4M-X
Q29
FA1A4M-X
Q40
FA1A4M-X
Q34
2SC3735(45)-X
Q35
2SA1462Y3Y4T1
Q36
2SC3735(45)-X
Q37
2SA1462Y3
LD1
SLR-55MC3F
CN2
10A SBEGND
11A SBE1
12A SYSGND
12B SYSRST
13A JBCLK
13B JBDATA
14A RFJBCS
14B L:AUTO
17B TRM
18A HIDR2(G)
18B HIDR2(X)
19A HIDR1
24B PLL2
24A DOP2
EQ_OUT
TH+0.5
TH-0.5
TH+1
TH0
TH-1
DO_H
HIDP12
DOP1
HIDP2
P+5V
P+3.3V
P-5V
A+5V
D+5V
DGND
K20
K21
K25
K30
K32
TP19
TP20
TP21
TP22
TP26
TP28
TP33
TP34
TP35
TP36
TP37
TP38
TP39
TP40
TP41
TP43
TP44
TP50
TP51
TP52

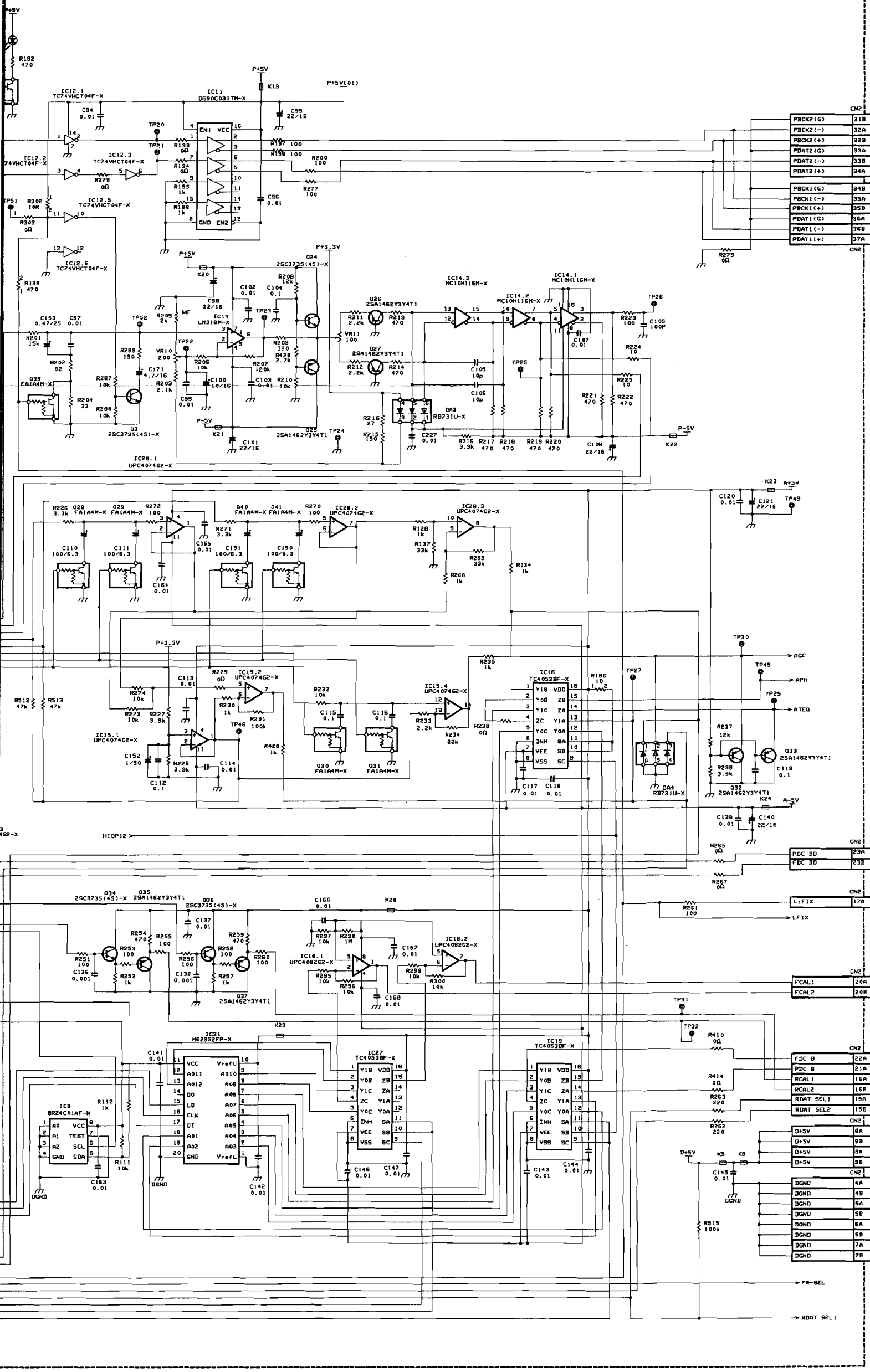
P+5V
R192 470
IC12.1 TC74VHCT04F-X
IC11 DS90C031TM-X
K19
P+5V(01)
C94 0.01
C95 22/16
TP20
TP21
R193 0Ω
R194 0Ω
R195 1k
R196 1k
R197 100
R198 100
R200 100
R277 100
C96 0.01
IC12.3 TC74VHCT04F-X
IC12.2 74VHCT04F-X
R278 0Ω
TP51
R302 10k
R303 0Ω
IC12.5 TC74VHCT04F-X
IC12.6 TC74VHCT04F-X
R139 470
R279 0Ω
CN2
PBCK2(G) 31B
PBCK2(-) 32A
PBCK2(+) 32B
PDAT2(G) 33A
PDAT2(-) 33B
PDAT2(+) 34A
NC
PBCK1(G) 34B
PBCK1(-) 35A
PBCK1(+) 35B
PDAT1(G) 36A
PDAT1(-) 36B
PDAT1(+) 37A
TO 02 CN2 MOTHER-2
12 CN22→CN7 MOTHER-1
15 CN1 PV PROCESS
P+3.3V
K20
Q24 2SC3735(45)-X
R208 12k
C98 22/16
C102 0.01
C104 0.1
TP23
R205 2k
MF
IC13 LM318M-X
C153 0.47/25
C97 0.01
R201 15k
TP52
TP22
VR10 200
R206 10k
R207 120k
R209 390
R428 2.7k
R202 82
R289 150
C171 4.7/16
R203 2.1k
R287 10k
R288 10k
R204 33
Q35 EA1A6M-X
Q3 2SC3735(45)-X
C100 10/16
C103 0.01
R210 10k
C99 0.01
VR11 100
Q26 2SA1462Y3Y4T1
R211 2.2k
R213 470
Q27 2SA1462Y3Y4T1
R212 2.2k
R214 470
IC14.3 MC10H116M-X
IC14.1 MC10H116M-X
IC14.2 MC10H116M-X
C107 0.01
TP26
R223 100
C109 100P
R224 10
TP25
C105 10p
C106 10p
R225 10
R221 470
R222 470
DA3 RB731U-X
R216 27
R215 150
C227 0.01
R316 3.9k
R217 470
R218 470
R219 470
R220 470
C108 22/16
P-5V
K21
K22
C101 22/16
Q25 2SA1462Y3Y4T1
TP24
IC28.1 UPC4074G2-X
R226 3.3k
Q28 FA1A4M-X
Q29 FA1A4M-X
R272 100
C165 0.01
C164 0.01
C110 100/6.3
C111 100/6.3
C151 100/6.3
C150 100/6.3
R271 3.3k
Q40 FA1A4M-X
Q41 FA1A4M-X
R270 100
IC28.2 UPC4074G2-X
IC28.3 UPC4074G2-X
R128 1k
R137 33k
R269 33k
R268 1k
R134 1k
K23
A+5V
C120 0.01
C121 22/16
TP49
P+3.3V
R512 47k
R513 47k
R274 10k
R273 10k
R227 3.9k
C113 0.01
R229 0Ω
IC19.2 UPC4074G2-X
R230 1k
R231 100k
IC15.1 UPC4074G2-X
C152 1/50
C112 0.1
R228 3.9k
C114 0.01
TP46
R428 1k
R232 10k
C115 0.1
C116 0.1
Q30 FA1A4M-X
Q31 FA1A4M-X
IC15.4 UPC4074G2-X
R233 2.2k
R234 22k
R235 1k
IC16 TC4053BF-X
R238 0Ω
R186 10
TP27
DA4 RB731U-X
TP30
TP45
TP29
AGC
APH
ATEQ
R237 12k
R238 3.9k
Q33 2SA1462Y3Y4T1
C119 0.1
Q32 2SA1462Y3Y4T1
K24
A-5V
C139 0.01
C140 22/16
C117 0.01
C118 0.01
HIDP12
R265 0Ω
R267 0Ω
PDC BD 23A
PDC BD 23B
Q34 2SC3735(45)-X
Q35 2SA1462Y3Y4T1
Q36 2SC3735(45)-X
C137 0.01
R254 470
R255 100
R253 100
R256 100
R258 100
R259 470
R260 100
R251 100
R252 1k
C136 0.001
C138 0.001
R257 1k
Q37 2SA1462Y3Y4T1
C166 0.01
K28
R297 10k
R298 1M
IC18.1 UPC4082G2-X
R295 10k
R296 10k
C167 0.01
IC18.2 UPC4082G2-X
R299 10k
R300 10k
C168 0.01
R261 100
L.FIX 17A
LFIX
FCAL1 20A
FCAL2 20B
K29
IC31 M62352FP-X
C141 0.01
IC27 TC4053BF-X
IC19 TC4053BF-X
C146 0.01
C147 0.01
C143 0.01
C144 0.01
TP31
TP32
R410 0Ω
R414 0Ω
R263 220
R262 220
FDC B 22A
FDC B 21A
RCAL1 16A
RCAL2 16B
RDAT SEL1 15A
RDAT SEL2 15B
D+5V 8A
D+5V 8B
D+5V 9A
D+5V 9B
K9
K8
C145 0.01
R515 100k
DGND 4A
DGND 4B
DGND 5A
DGND 5B
DGND 6A
DGND 6B
DGND 7A
DGND 7B
IC9 BR24C01AF-W
R112 1k
R111 10k
C163 0.01
FR-SEL
RDAT SEL1

## 4.27 RF PROCESS-1, -2 CIRCUIT BOARD

**— SIDE A —**

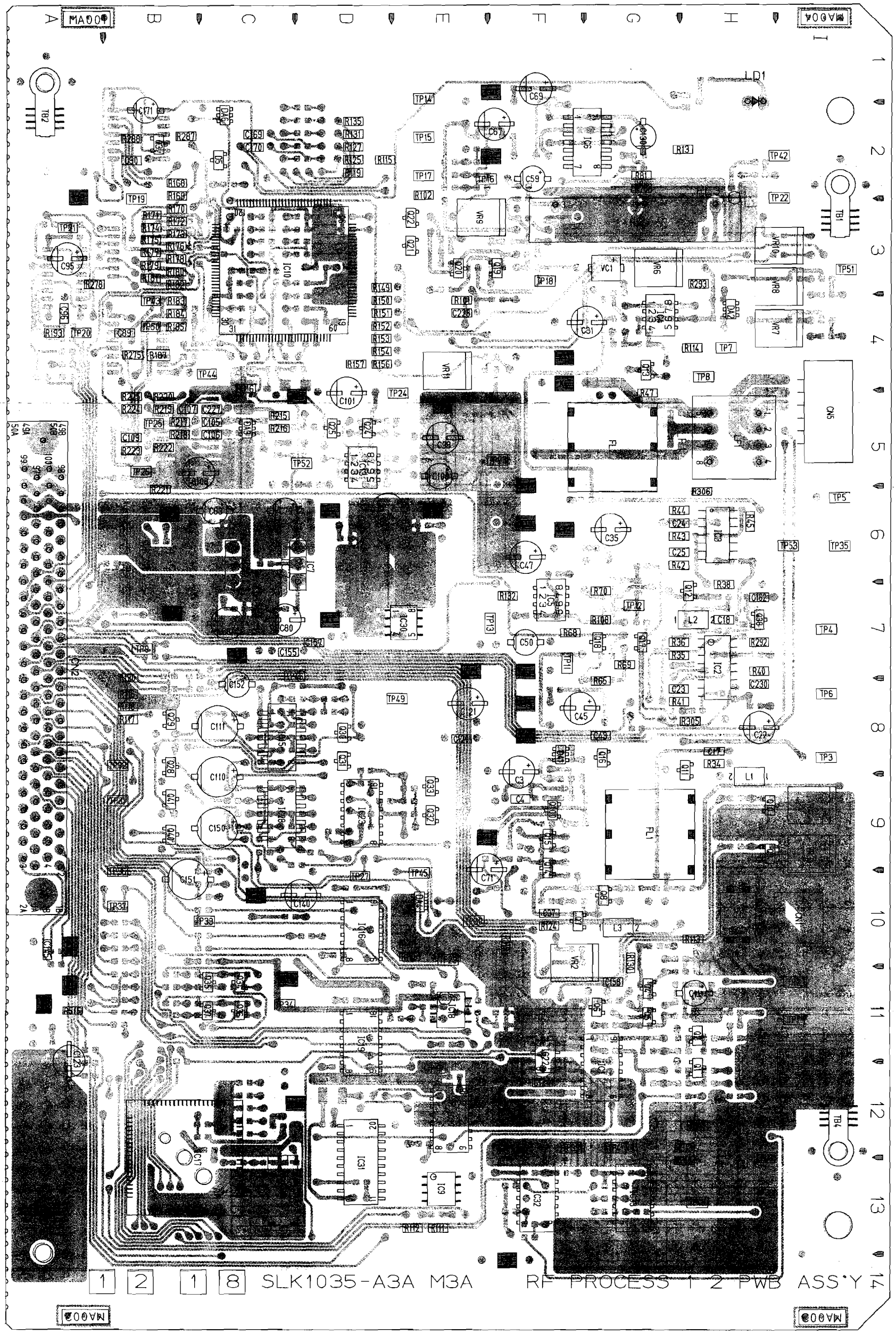

**— SIDE B —**

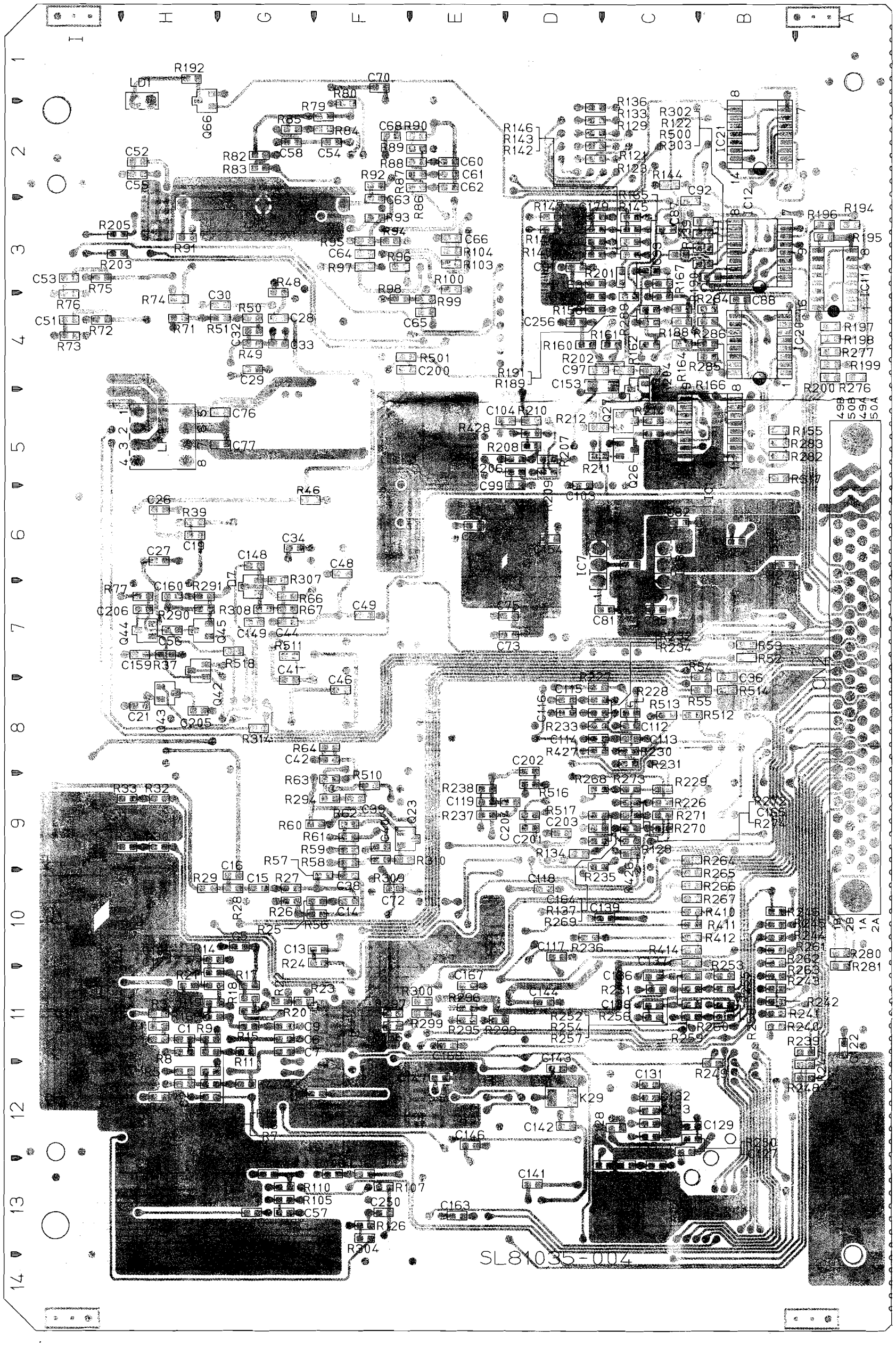

## ● ADDRESS TABLE OF BOARD PARTS

Side — A-1C (Y axis / X axis)

Each address may have an address error by one interval.

| | | | | | | | | | | | | | | | | | | | |
|---|---|---|---|---|---|---|---|---|---|---|---|---|---|---|---|---|---|---|---|
| *IC1 | A- 11G | R2 | B- 11H | R84 | B- 2G | R166 | B- 4B | R248 | B- 12A | R512 | B- 8C | C64 | B- 3F | C146 | B- 13E | TP37 | A- 10B |
| IC2 | A- 7H | R3 | B- 11H | R85 | B- 2G | R167 | B- 3D | R249 | B- 12B | R513 | B- 8C | C65 | B- 4F | C147 | B- 12F | TP38 | A- 13H |
| IC3 | A- 6H | R4 | B- 12H | R86 | B- 2F | R168 | A- 2B | R250 | B- 12C | R514 | B- 8B | C66 | B- 3E | C148 | B- 6G | TP39 | A- 13G |
| IC4 | A- 4G | R5 | B- 12H | R87 | B- 2F | R169 | A- 2B | R251 | B- 11D | R515 | A- 11A | C67 | A- 2F | C149 | B- 7G | TP40 | A- 13H |
| IC5 | A- 7F | R6 | B- 12H | R88 | B- 2F | R170 | A- 3B | R252 | B- 11C | R516 | B- 9E | C68 | B- 2F | C150 | A- 9C | TP41 | A- 13G |
| IC6 | A- 2G | R7 | B- 12H | R89 | B- 2F | R171 | A- 3B | R253 | B- 11B | R517 | B- 9E | C69 | A- 1F | C151 | A- 10B | TP42 | A- 2H |
| IC7 | A- 6D | R8 | B- 12H | R90 | B- 2F | R172 | A- 3B | R254 | B- 11C | R518 | B- 7G | C70 | B- 1F | C152 | A- 8D | TP43 | A- 4B |
| IC8 | A- 6C | R9 | B- 11H | R91 | B- 3H | R173 | A- 3B | R255 | B- 11B | | | C71 | A- 10F | C153 | B- 4D | TP44 | A- 4C |
| IC9 | A- 13E | R10 | B- 12H | R92 | B- 2F | R174 | A- 3B | R256 | B- 11D | VR1 | A- 12I | C72 | B- 10F | C154 | B- 6E | TP45 | A- 10E |
| IC10 | A- 3C | R11 | B- 12G | R93 | B- 3F | R175 | A- 3B | R257 | B- 11C | VR2 | A- 11G | C73 | B- 7E | C155 | A- 7D | TP46 | A- 8D |
| IC11 | B- 4A | R12 | B- 12H | R94 | B- 3F | R176 | A- 3B | R258 | B- 11B | VR3 | A- 9I | C74 | A- 6E | C156 | B- 6B | TP47 | A- 12H |
| IC12 | B- 3B | R13 | A- 2H | R95 | B- 3F | R177 | A- 3B | R259 | B- 11C | VR4 | A- 9I | C75 | B- 7E | C157 | A- 7D | TP48 | A- 13H |
| IC13 | A- 5D | R14 | B- 11H | R96 | B- 3F | R178 | A- 3B | R260 | B- 11B | VR6 | A- 3G | C76 | B- 5H | C158 | A- 11G | TP49 | A- 8E |
| IC14 | B- 5B | R15 | B- 11G | R97 | B- 3F | R179 | A- 3B | R261 | B- 10B | VR7 | A- 4H | C77 | B- 5H | C159 | B- 7H | TP50 | A- 4B |
| IC15 | A- 8C | R16 | B- 11H | R98 | B- 4F | R180 | A- 3B | R262 | B- 11B | VR8 | A- 3H | C78 | B- 6D | C160 | B- 7H | TP51 | A- 3I |
| IC16 | A- 10D | R17 | B- 11G | R99 | B- 4F | R181 | A- 3B | R263 | B- 11B | VR9 | A- 3F | C79 | A- 6D | C161 | B- 13F | TP52 | A- 5D |
| IC17 | A- 13B | R18 | B- 11G | R100 | B- 3E | R182 | A- 3B | R264 | B- 9C | VR10 | A- 3H | C80 | A- 7D | C162 | A- 7H | TP53 | A- 6I |
| IC18 | A- 11E | R19 | B- 11H | R101 | A- 4F | R183 | A- 4B | R265 | B- 10C | VR11 | A- 4E | C81 | B- 7D | C163 | B- 13E | | |
| IC19 | A- 11D | R20 | B- 11G | R102 | A- 2E | R184 | A- 4B | R266 | B- 10C | | | C82 | B- 6C | C164 | B- 9D | FL1 | A- 9G |
| IC20 | B- 4B | R21 | B- 11H | R103 | B- 3E | R185 | A- 4B | R267 | B- 10C | C1 | B- 11H | C83 | A- 6C | C165 | B- 9D | FL2 | A- 5G |
| IC21 | B- 2B | R22 | B- 11G | R104 | B- 3E | R186 | A- 11E | R268 | B- 9D | C2 | B- 12H | C84 | A- 7C | C166 | B- 11F | FL3 | A- 3F |
| IC22 | A- 12F | R23 | B- 11G | R105 | B- 13G | R187 | A- 4B | R269 | B- 9D | C3 | A- 9F | C85 | B- 7D | C167 | B- 11E | | |
| IC23 | A- 9D | R24 | B- 11G | R106 | B- 13G | R188 | B- 4C | R270 | B- 9D | C4 | A- 9F | C86 | B- 13G | C168 | B- 11E | K1 | A- 7D |
| IC27 | A- 12E | R25 | B- 10G | R107 | B- 13F | R189 | B- 4D | R271 | B- 9D | C5 | B- 10G | C87 | B- 3D | C169 | A- 2D | K2 | A- 6D |
| IC28 | A- 9C | R26 | B- 10G | R108 | A- 7G | R190 | B- 4C | R272 | B- 9D | C6 | B- 11G | C88 | B- 4B | C170 | A- 2D | K3 | A- 7D |
| IC30 | A- 7E | R27 | B- 10G | R109 | B- 13G | R191 | B- 4D | R273 | B- 9D | C7 | B- 12G | C89 | A- 4B | C171 | A- 2B | K4 | A- 7B |
| IC31 | A- 12D | R28 | B- 10G | R110 | B- 13G | R192 | B- 1H | R274 | B- 9D | C8 | B- 12G | C90 | A- 2B | C179 | B- 3D | K5 | A- 6E |
| IC32 | A- 13F | R29 | B- 10H | R111 | A- 13E | R193 | A- 4A | R275 | A- 4B | C9 | B- 11G | C91 | B- 3D | C200 | B- 4F | K6 | A- 4G |
| IC33 | A- 13G | R30 | B- 9H | R112 | A- 13E | R194 | B- 3A | R276 | B- 4A | C10 | B- 11H | C92 | B- 3C | C201 | B- 9E | K7 | A- 6F |
| | | R31 | B- 9H | R113 | A- 10H | R195 | B- 3A | R277 | B- 4A | C11 | A- 11H | C93 | B- 3D | C202 | B- 9E | K8 | A- 10A |
| Q1 | A- 12H | R32 | B- 9H | R114 | A- 4H | R196 | B- 3A | R278 | A- 3A | C12 | B- 11H | C94 | B- 3C | C203 | B- 9D | K9 | A- 11A |
| Q2 | A- 11H | R33 | B- 9H | R115 | A- 2E | R197 | B- 4A | R279 | B- 6B | C13 | B- 10G | C95 | A- 3A | C204 | B- 9E | K10 | A- 8F |
| Q3 | A- 2B | R34 | A- 8H | R116 | A- 8B | R198 | B- 4A | R280 | B- 11A | C14 | B- 10F | C96 | A- 4A | C205 | B- 8H | K11 | A- 4G |
| Q4 | A- 11G | R35 | A- 7H | R117 | A- 8B | R199 | B- 4A | R281 | B- 11A | C15 | B- 10G | C97 | B- 4D | C206 | B- 7H | K12 | A- 6G |
| Q5 | A- 11G | R36 | A- 7H | R118 | A- 8B | R200 | B- 4A | R282 | B- 5B | C16 | B- 10G | C98 | A- 5E | C225 | A- 4F | K13 | A- 8F |
| Q6 | A- 11G | R37 | B- 7H | R119 | A- 2E | R201 | B- 3D | R283 | B- 5B | C17 | A- 8H | C99 | B- 6E | C227 | A- 5C | K14 | A- 9F |
| Q7 | A- 10F | R38 | A- 7H | R120 | A- 8B | R202 | B- 4D | R284 | B- 4C | C18 | A- 7H | C100 | A- 5E | C230 | A- 8H | K15 | A- 6F |
| Q8 | A- 10G | R39 | B- 6H | R121 | B- 2D | R203 | B- 3H | R285 | B- 4C | C19 | B- 6H | C101 | A- 5E | C250 | B- 13F | K16 | A- 8F |
| Q9 | A- 9H | R40 | A- 8H | R122 | B- 3B | R204 | B- 4D | R286 | B- 4C | C20 | B- 6E | C102 | B- 5E | C256 | B- 4D | K17 | A- 2F |
| Q10 | A- 9H | R41 | A- 8H | R123 | B- 2D | R205 | B- 3H | R287 | A- 2B | C21 | B- 8H | C103 | B- 6D | | | K18 | A- 1F |
| Q11 | A- 9H | R42 | A- 6H | R124 | A- 10F | R206 | B- 5E | R288 | A- 2B | C22 | A- 8H | C104 | B- 5E | VC1 | A- 3G | K19 | A- 2A |
| Q12 | A- 7H | R43 | A- 6H | R125 | A- 2E | R207 | B- 5E | R289 | B- 4D | C23 | A- 8H | C105 | A- 5C | | | K20 | A- 5E |
| Q13 | A- 4G | R44 | A- 6H | R126 | B- 13F | R208 | B- 5E | R290 | B- 7H | C24 | A- 6H | C106 | A- 5C | L1 | A- 9H | K21 | A- 5D |
| Q14 | A- 10F | R45 | A- 6H | R127 | A- 2E | R209 | B- 5E | R291 | B- 7H | C25 | A- 6H | C107 | A- 5B | L2 | A- 7H | K22 | A- 6B |
| Q15 | A- 9F | R46 | B- 6G | R128 | B- 9D | R210 | B- 5E | R292 | A- 7H | C26 | B- 6H | C108 | A- 5C | L3 | A- 10G | K23 | A- 8F |
| Q16 | A- 8G | R47 | A- 5G | R129 | B- 2D | R211 | B- 5D | R293 | A- 3H | C27 | B- 6H | C109 | A- 5B | | | K24 | A- 10D |
| Q17 | A- 7G | R48 | B- 4G | R130 | A- 11G | R212 | B- 5D | R294 | B- 9G | C28 | B- 4G | C110 | A- 9C | TP1 | A- 11I | K25 | A- 14F |
| Q18 | A- 7G | R49 | B- 4G | R131 | A- 2E | R213 | B- 5D | R295 | B- 11E | C29 | B- 4G | C111 | A- 8C | TP2 | A- 11I | K28 | A- 11D |
| Q19 | A- 3F | R50 | B- 4G | R132 | A- 7F | R214 | B- 5D | R296 | B- 11E | C30 | B- 4H | C112 | B- 8D | TP3 | A- 8I | K29 | B- 12D |
| Q20 | A- 3E | R51 | B- 4H | R133 | B- 2D | R215 | A- 5D | R297 | B- 11F | C31 | A- 4G | C113 | B- 8D | TP4 | A- 7I | K30 | A- 12D |
| Q21 | A- 3E | R52 | B- 7B | R134 | B- 9D | R216 | A- 5D | R298 | B- 11E | C32 | B- 4G | C114 | B- 8D | TP5 | A- 6I | K32 | A- 11A |
| Q22 | A- 3E | R53 | B- 7B | R135 | A- 2E | R217 | A- 5B | R299 | B- 11F | C33 | B- 4G | C115 | B- 8D | TP6 | A- 8I | | |
| Q23 | B- 9F | R54 | B- 8B | R136 | B- 2D | R218 | A- 5B | R300 | B- 11F | C34 | B- 6G | C116 | B- 8D | TP7 | A- 4H | LD1 | A- 2H |
| Q24 | A- 5D | R55 | B- 8B | R137 | B- 9D | R219 | A- 5B | R301 | B- 13D | C35 | A- 6G | C117 | B- 11E | TP8 | A- 4H | | |
| Q25 | A- 5D | R56 | B- 10G | R138 | B- 3D | R220 | A- 5B | R302 | B- 3C | C36 | B- 8B | C118 | B- 10E | TP9 | A- 7B | LF1 | A- 5H |
| Q26 | B- 5D | R57 | B- 10G | R139 | B- 3C | R221 | A- 6B | R303 | B- 3C | C37 | A- 10F | C119 | B- 9E | TP10 | A- 12E | | |
| Q27 | B- 5D | R58 | B- 10F | R140 | B- 3D | R222 | A- 5B | R304 | B- 13F | C38 | B- 10F | C120 | A- 8F | TP11 | A- 7G | T1 | A- 10H |
| Q28 | A- 9B | R59 | B- 9F | R141 | B- 3D | R223 | A- 5B | R305 | A- 8H | C39 | B- 9F | C121 | A- 8F | TP12 | A- 7G | | |
| Q29 | A- 8B | R60 | B- 9G | R142 | B- 3D | R224 | A- 5B | R306 | A- 6H | C40 | B- 9F | C122 | B- 12A | TP13 | A- 7F | TB1 | A- 2I |
| Q30 | A- 8D | R61 | B- 9F | R143 | B- 3D | R225 | A- 5B | R307 | B- 7G | C41 | B- 8G | C123 | A- 12A | TP14 | A- 1E | TB2 | A- 1A |
| Q31 | A- 8D | R62 | B- 9F | R144 | B- 2C | R226 | B- 9D | R308 | B- 7G | C42 | B- 8G | C124 | A- 12F | TP15 | A- 2E | TB3 | A- 14A |
| Q32 | A- 9E | R63 | B- 9G | R145 | B- 3D | R227 | B- 8D | R309 | B- 9F | C43 | A- 8G | C125 | B- 13D | TP16 | A- 2F | TB4 | A- 13I |
| Q33 | A- 9E | R64 | B- 8G | R146 | B- 3D | R228 | B- 8D | R310 | B- 9F | C44 | B- 7G | C126 | B- 13D | TP17 | A- 2E | | |
| Q34 | A- 11C | R65 | A- 8G | R147 | B- 3E | R229 | B- 9D | R311 | A- 10E | C45 | A- 8G | C127 | B- 13C | TP18 | A- 3F | DA1 | A- 8F |
| Q35 | A- 11B | R66 | B- 7G | R148 | B- 3E | R230 | B- 8D | R312 | A- 13H | C46 | B- 8F | C128 | B- 12D | TP19 | A- 3B | DA2 | A- 4H |
| Q36 | A- 11C | R67 | B- 7G | R149 | A- 3E | R231 | B- 8D | R313 | A- 13H | C47 | A- 6F | C129 | B- 12C | TP20 | A- 4A | DA3 | A- 5D |
| Q37 | A- 11B | R68 | A- 7G | R150 | A- 4E | R232 | B- 8D | R314 | B- 8G | C48 | B- 7F | C130 | A- 2G | TP21 | A- 3A | DA4 | A- 10E |
| Q38 | A- 7H | R69 | A- 7G | R151 | A- 4E | R233 | B- 8D | R315 | A- 10F | C49 | B- 7F | C131 | B- 12D | TP22 | A- 3H | DA6 | A- 2C |
| Q39 | B- 5C | R70 | A- 7G | R152 | A- 4E | R234 | B- 8D | R316 | A- 4D | C50 | A- 7F | C132 | B- 12D | TP23 | A- 5F | | |
| Q40 | A- 9B | R71 | B- 4H | R153 | A- 4E | R235 | B- 10D | R317 | B- 6B | C51 | B- 4I | C133 | B- 12D | TP24 | A- 5E | X1 | A- 13D |
| Q41 | A- 9B | R72 | B- 4I | R154 | A- 4E | R236 | B- 10D | R410 | B- 10C | C52 | B- 2H | C134 | B- 12D | TP25 | A- 5B | | |
| Q42 | B- 8H | R73 | B- 4I | R155 | B- 5B | R237 | B- 9E | R411 | B- 10C | C53 | B- 3I | C135 | B- 12D | TP26 | A- 5B | CN1 | A- 10I |
| Q43 | B- 8H | R74 | B- 4H | R156 | A- 4E | R238 | B- 9E | R412 | B- 10C | C54 | B- 2G | C136 | B- 11D | TP27 | A- 10E | CN2 | A- 7A |
| Q44 | B- 7H | R75 | B- 3I | R157 | A- 4E | R239 | B- 12A | R414 | B- 10C | C55 | B- 2H | C137 | B- 11C | TP28 | A- 12H | CN5 | A- 5I |
| Q45 | B- 7H | R76 | B- 4I | R158 | B- 4D | R240 | B- 11B | R424 | B- 12G | C56 | B- 7H | C138 | B- 11D | TP29 | A- 11E | | |
| Q66 | B- 2H | R77 | B- 7H | R159 | B- 4D | R241 | B- 11B | R426 | B- 9D | C57 | B- 13G | C139 | B- 10D | TP30 | A- 10F | | |
| Q100 | A- 9F | R78 | A- 2G | R160 | B- 4D | R242 | B- 11B | R427 | B- 8D | C58 | B- 2G | C140 | A- 10D | TP31 | A- 9B | | |
| | | R79 | B- 2G | R161 | B- 4D | R243 | B- 11B | R428 | B- 5E | C59 | A- 2F | C141 | B- 13E | TP32 | A- 8B | | |
| D5 | A- 2C | R80 | B- 2F | R162 | B- 4D | R244 | B- 10B | R500 | B- 3C | C60 | B- 2E | C142 | B- 12D | TP33 | A- 10B | | |
| D7 | B- 7G | R81 | A- 2G | R163 | B- 3D | R245 | B- 10B | R501 | B- 4F | C61 | B- 2E | C143 | B- 12E | TP34 | A- 11D | | |
| | | R82 | B- 2G | R164 | B- 4C | R246 | B- 10B | R510 | B- 9F | C62 | B- 2E | C144 | B- 11E | TP35 | A- 6I | | |
| R1 | B- 11H | R83 | B- 2G | R165 | B- 4D | R247 | B- 12A | R511 | B- 7G | C63 | B- 3F | C145 | A- 10A | TP36 | A- 10B | | |


4-55

V E-V20471 / Druck 41

## 4.28 RF PROCESS-2 SCHEMATIC DIAGRAMS

### — DIAGRAM 1/2 —

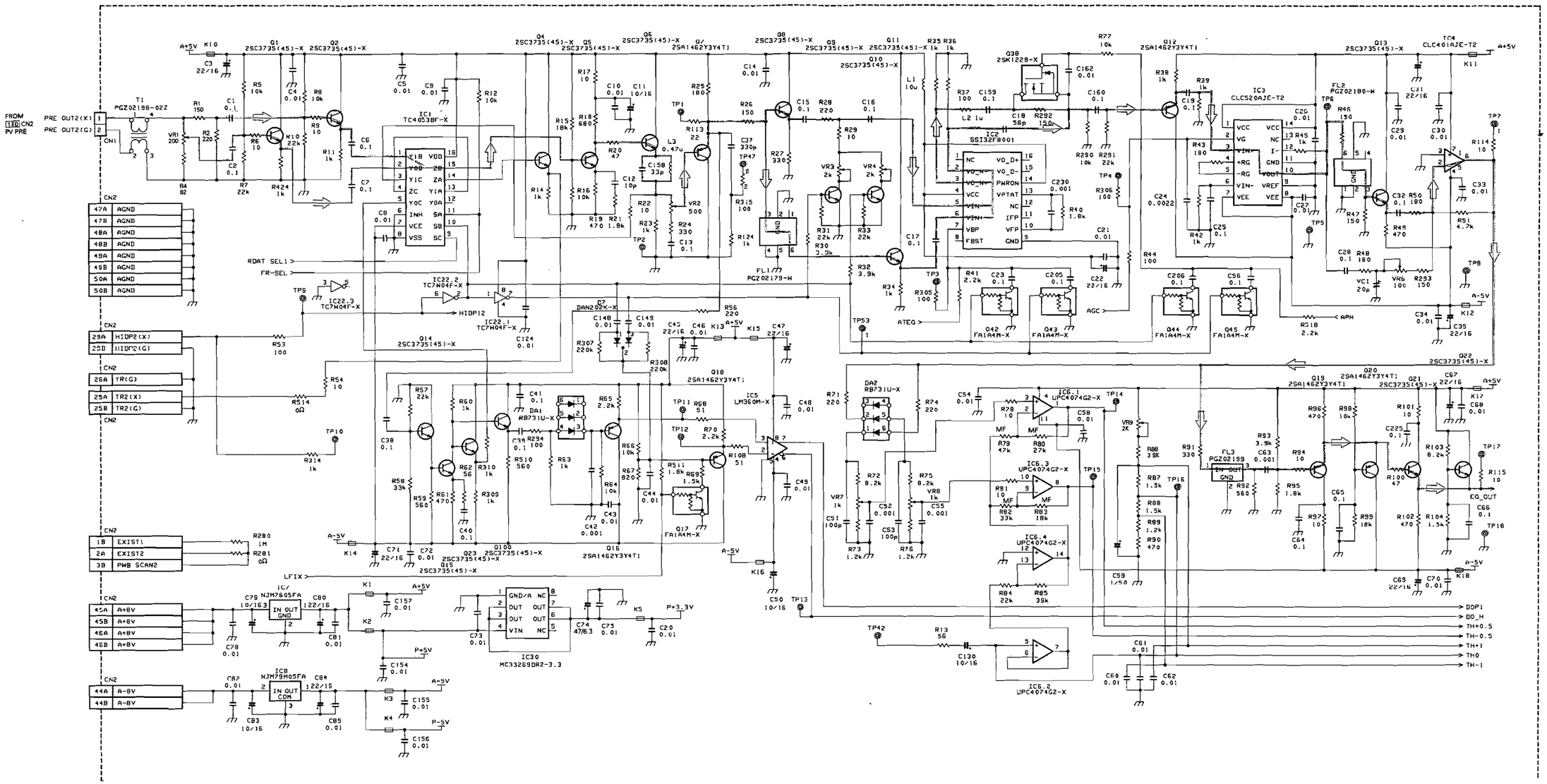

**— DIAGRAM 2/2 —**

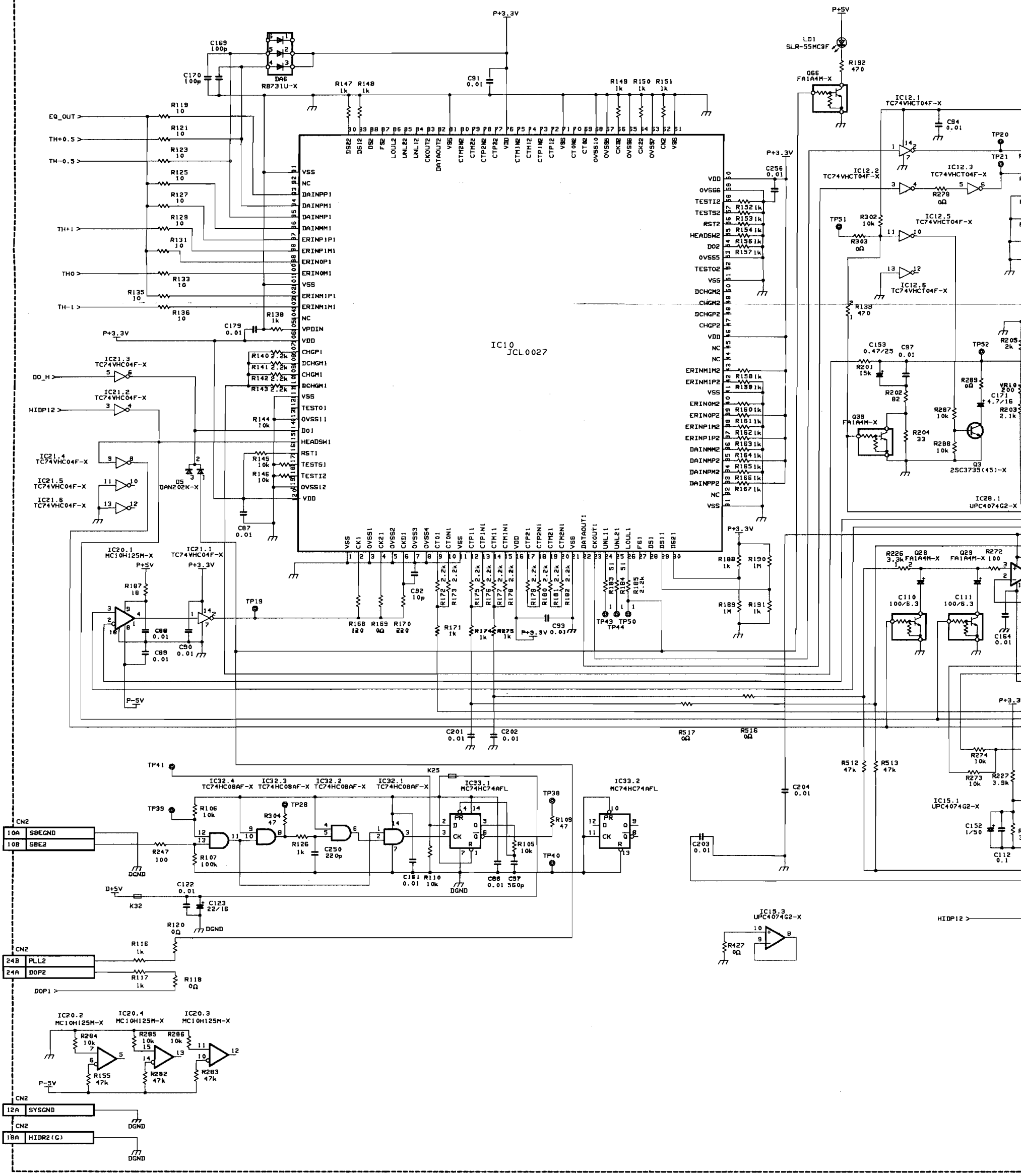
IC10
JCL0027
P+3.3V
P+5V
P-5V
DGND
EQ_OUT
TH+0.5
TH-0.5
TH+1
TH0
TH-1
HIDP12
DO_H
DOP1
D+5V
DA6 RB731U-X
D5 DAN202K-X
K25
K32
IC10 JCL0027
IC20.1 MC10H125M-X
IC20.2 MC10H125M-X
IC20.3 MC10H125M-X
IC20.4 MC10H125M-X
IC21.1 TC74VHC04F-X
IC21.2 TC74VHC04F-X
IC21.3 TC74VHC04F-X
IC21.4 TC74VHC04F-X
IC21.5 TC74VHC04F-X
IC21.6 TC74VHC04F-X
IC32.1 TC74HC08AF-X
IC32.2 TC74HC08AF-X
IC32.3 TC74HC08AF-X
IC32.4 TC74HC08AF-X
IC33.1 MC74HC74AFL
IC33.2 MC74HC74AFL
IC12.1 TC74VHCT04F-X
IC12.2 TC74VHCT04F-X
IC12.3 TC74VHCT04F-X
IC12.5 TC74VHCT04F-X
IC12.6 TC74VHCT04F-X
IC28.1 UPC4074G2-X
IC15.1 UPC4074G2-X
IC15.3 UPC4074G2-X
LD1 SLR-55MC3F
Q66 FA1A4M-X
Q39 FA1A4M-X
Q28 FA1A4M-X
Q29 FA1A4M-X
Q3 2SC3735(45)-X
CN2
10A SBEGND
10B SBE2
24B PLL2
24A DOP2
12A SYSGND
18A HIDR2(G)

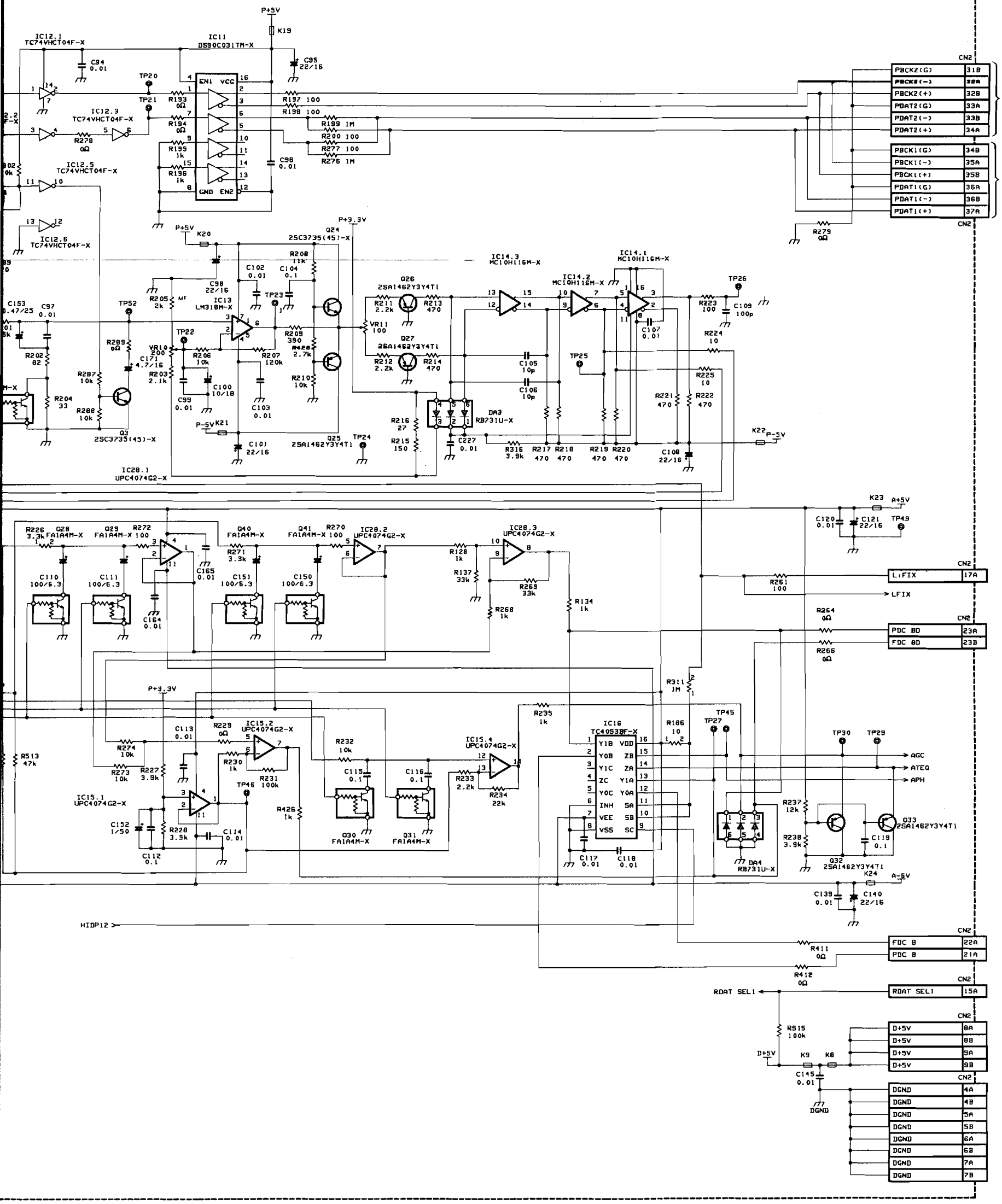
IC12.1 TC74VHCT04F-X
IC11 0590C031TM-X
P+5V
K19
C94 0.01
C95 22/16
TP20
TP21
R193 0Ω
R194 0Ω
R195 1k
R196 1k
R197 100
R198 100
R199 1M
R200 100
R277 100
R276 1M
C96 0.01
EN1 VCC
GND EN2
IC12.3 TC74VHCT04F-X
R228 0Ω
IC12.5 TC74VHCT04F-X
IC12.6 TC74VHCT04F-X
P+5V
K20
Q24 2SC3735(45)-X
P+3.3V
R208 11k
C102 0.01
C104 0.1
C98 22/16
TP23
R205 2k MF
IC13 LM318M-X
TP52
TP22
C153 0.47/25
C97 0.01
R289 0Ω
VR10 200
C171 4.7/16
R206 10k
R207 120k
R203 2.1k
C100 10/18
C99 0.01
C103 0.01
R209 390
R210 10k
R202 82
R204 33
R287 10k
R288 10k
Q3 2SC3735(45)-X
P-5V
K21
C101 22/16
Q25 2SA1462Y3Y4T1
TP24
IC28.1 UPC4074G2-X
IC14.3 MC10H116M-X
IC14.1 MC10H116M-X
IC14.2 MC10H116M-X
Q26 2SA1462Y3Y4T1
Q27 2SA1462Y3Y4T1
R211 2.2k
R213 470
R212 2.2k
R214 470
VR11 100
TP26
R223 100
C109 100p
C107 0.01
R224 10
TP25
C105 10p
C106 10p
R225 10
R221 470
R222 470
R216 27
R215 150
DA3 RB731U-X
C227 0.01
R316 3.9k
R217 470
R218 470
R219 470
R220 470
C108 22/16
K22 P-5V
R279 0Ω
CN2
PBCK2(G) 31B
PBCK2(-) 32B
PBCK2(+) 32B
PDAT2(G) 33A
PDAT2(-) 33B
PDAT2(+) 34A
TO
012 CN3→CN7 MOTHER-2
011 CN22→CN7 MOTHER-1
113 CN1 PV PROCESS
PBCK1(G) 34B
PBCK1(-) 35A
PBCK1(+) 35B
PDAT1(G) 36A
PDAT1(-) 36B
PDAT1(+) 37A
NC
R226 3.3k
Q28 FA1A4M-X
Q29 FA1A4M-X
R272 100
Q40 FA1A4M-X
R271 3.3k
Q41 FA1A4M-X
R270 100
IC28.2 UPC4074G2-X
IC28.3 UPC4074G2-X
C110 100/6.3
C111 100/6.3
C151 100/6.3
C150 100/6.3
C165 0.01
C164 0.01
R128 1k
R137 33k
R269 33k
R268 1k
R134 1k
K23 A+5V
C120 0.01
C121 22/16
TP49
R261 100
L:FIX 17A
LFIX
R264 0Ω
R266 0Ω
PDC BD 23A
FDC BD 23B
R311 1M
R235 1k
IC16 TC4053BF-X
Y1B VDD
Y0B ZB
Y1C ZA
ZC Y1A
Y0C Y0A
INH SA
VEE SB
VSS SC
R186 10
TP27
TP45
TP30
TP29
AGC
ATEQ
APH
R237 12k
R238 3.9k
Q33 2SA1462Y3Y4T1
Q32 2SA1462Y3Y4T1
C119 0.1
DA4 RB731U-X
C117 0.01
C118 0.01
K24 A-5V
C139 0.01
C140 22/16
P+3.3V
R229 0Ω
IC15.2 UPC4074G2-X
IC15.4 UPC4074G2-X
IC15.1 UPC4074G2-X
R274 10k
R273 10k
R227 3.9k
R230 1k
R231 100k
TP46
R232 10k
R233 2.2k
R234 22k
C115 0.1
C116 0.1
Q30 FA1A4M-X
Q31 FA1A4M-X
R426 1k
C113 0.01
C152 1/50
R228 3.9k
C114 0.01
C112 0.1
R513 47k
HIDP12
R411 0Ω
R412 0Ω
RDAT SEL1
RDAT SEL1 15A
R515 100k
D+5V
K9
K8
C145 0.01
DGND
D+5V 8A
D+5V 8B
D+5V 9A
D+5V 9B
DGND 4A
DGND 4B
DGND 5A
DGND 5B
DGND 6A
DGND 6B
DGND 7A
DGND 7B

## 4.29 OUT MEM SCHEMATIC DIAGRAMS

### — DIAGRAM 1/2 —

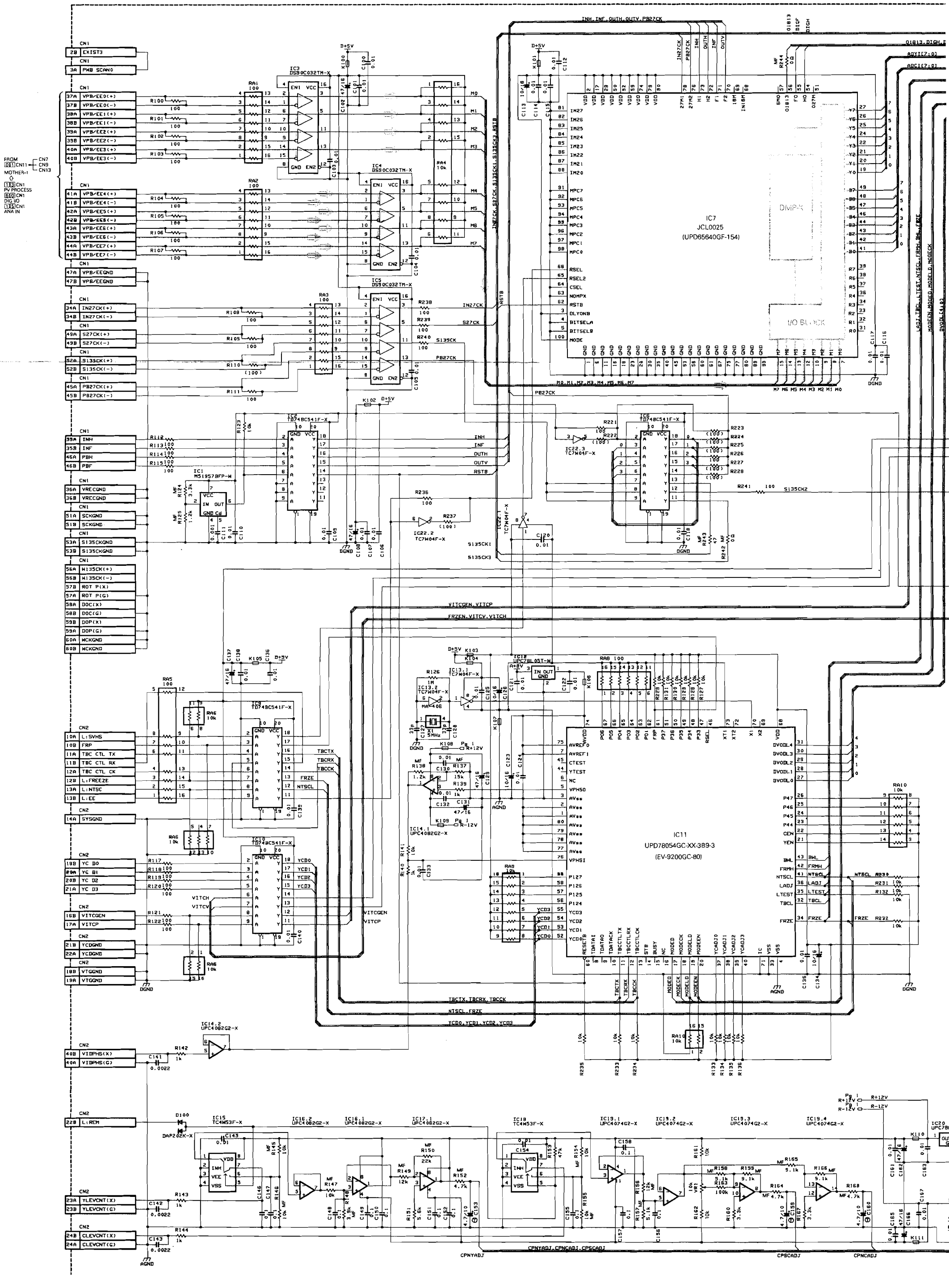

# 14 OUT MEM

| LAST NO. | | VACANT NO. |
|---|---|---|
| IC | 1 - 38 | |
| R | 100 - 244 | R116 |
| C | 100 - 231 | C170,C199 |
| Q | 1 - 15 | |
| TP | 1 - 5 | |
| K | 100 - 120 | |
| RA | 1 - 16 | RA7 |
| VR | 1 | |

## — DIAGRAM 2/2 —

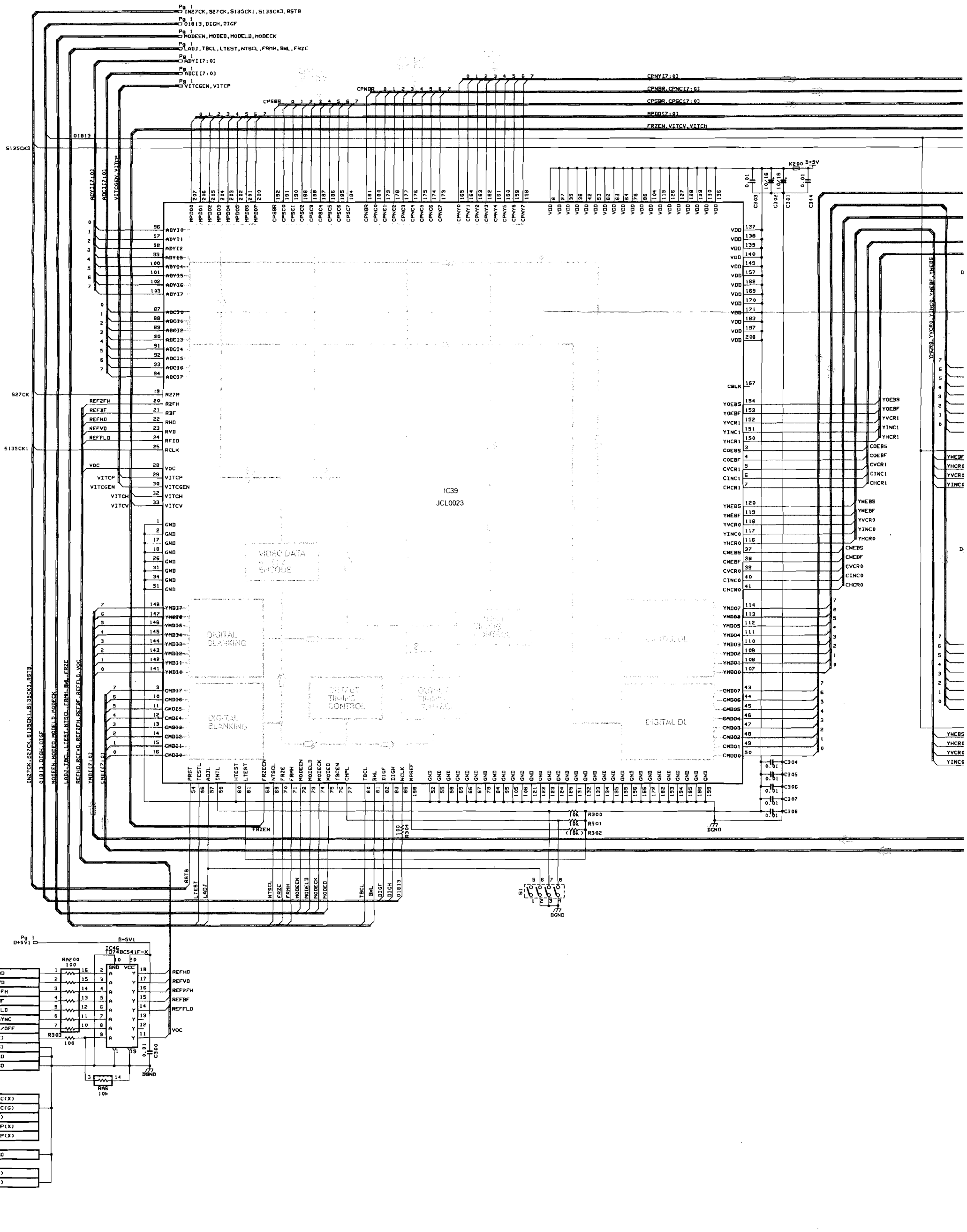
IC39
JCL0023
VIDEO DATA ENCODE
DIGITAL BLANKING
DIGITAL BLANKING
DIGITAL DL
IC46
TD748C541F-X
RA200 100
R303 100
RA6 10k
C300 0.01
CN2
1A REF HD
1B REF VD
2A REF 2FH
2B REF BF
3A REF FLD
3B REF SYNC
4A HIDP1/OFF
5A VOC(X)
5B VOC(G)
4B REFGND
5A REFGND
33A PBSYNC(X)
33B PBSYNC(G)
34A PBV(X)
34B TBC HP(X)
35A TBC VP(X)
35B TBCGND
39A SMP(X)
39B SMP(G)
D+5V1
DGND
S135CK3
01813
S27CK
S135CK1
VOC
VITCP
VITCGEN
VITCH
VITCV
FRZEN
R300 10k
R301 10k
R302 10k
R304 100
C304 0.01
C305 0.01
C306 0.01
C307 0.01
C308 0.01
C303 0.01
C302 10/16
C301 10/16
C344 0.01
K200 D+5V
S1
CPNY[7:0]
CPNBR,CPNC[7:0]
CPSBR,CPSC[7:0]
MPDO[7:0]
FRZEN,VITCV,VITCH
YHCR0,YVCR0,YINC0,YMEBF,YMEBS

# 14 OUT MEM

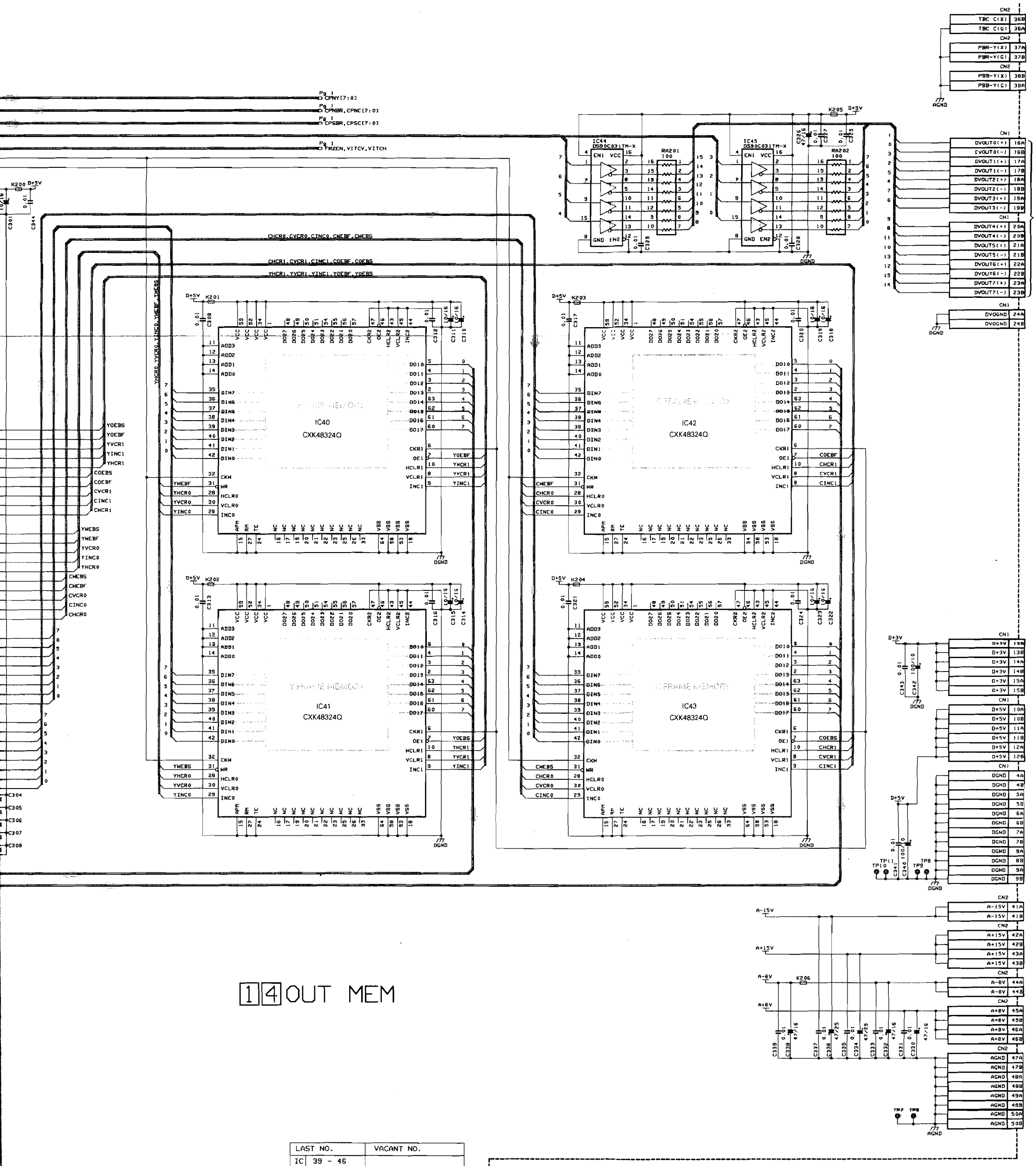


| LAST NO. | | VACANT NO. |
|---|---|---|
| IC | 39 - 46 | |
| R | 300 - 304 | |
| C | 300 - 344 | |
| Q | | |
| TP | 6 - 9 | |
| K | 200 - 206 | |
| RA | 200 - 202 | |
| | | |

## 4.30 OUT MEM CIRCUIT BOARD

— SIDE A —

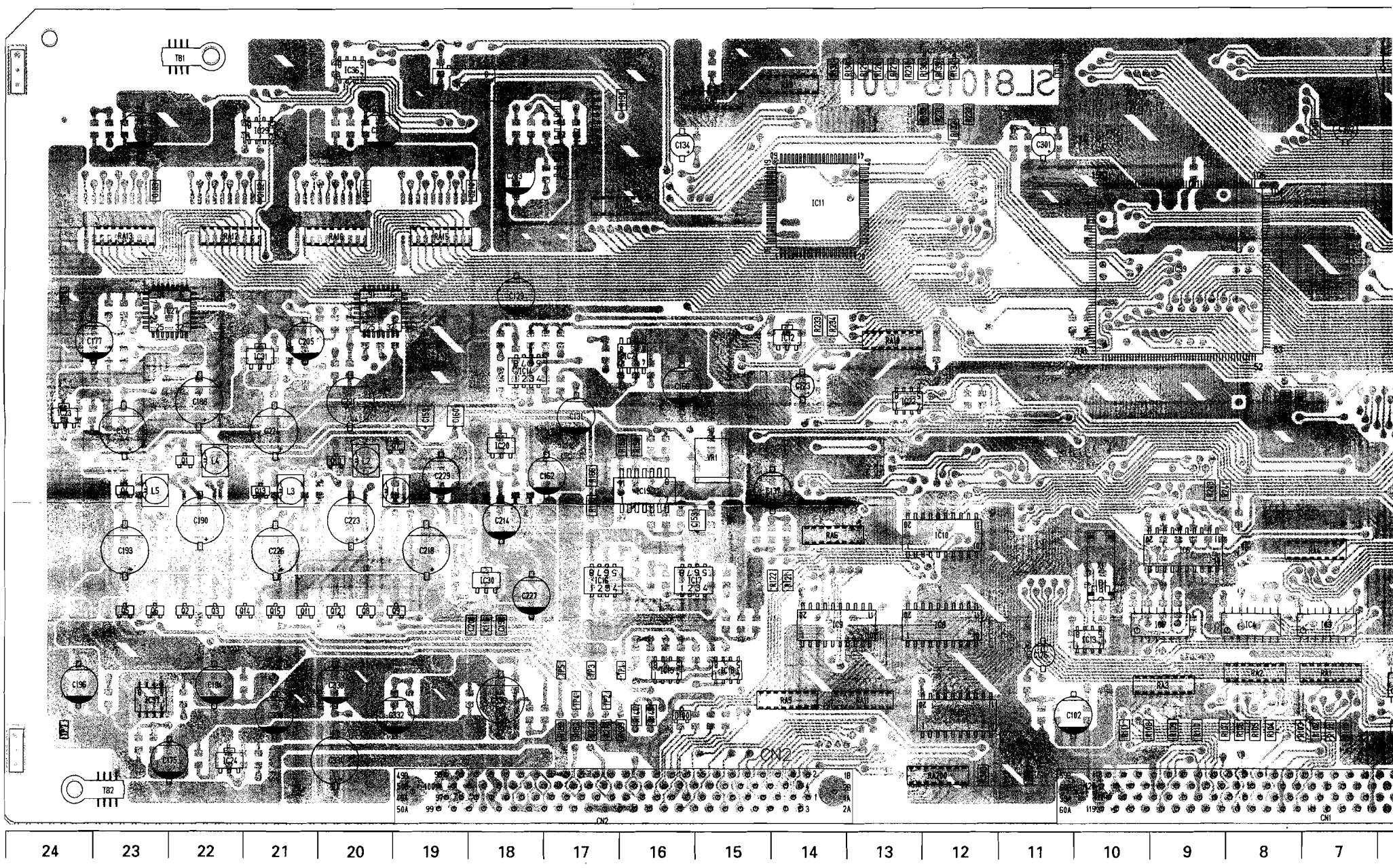


— SIDE B —

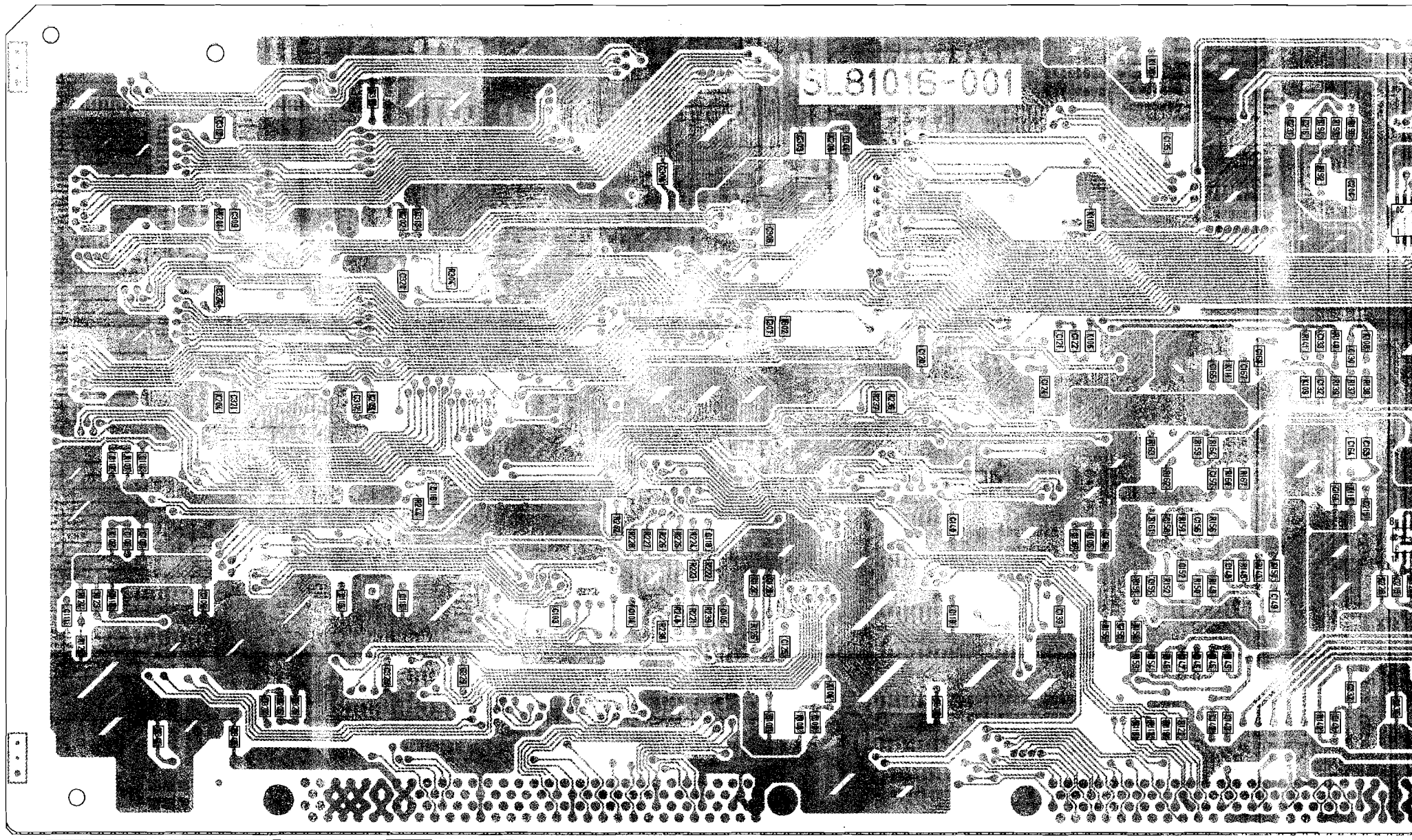

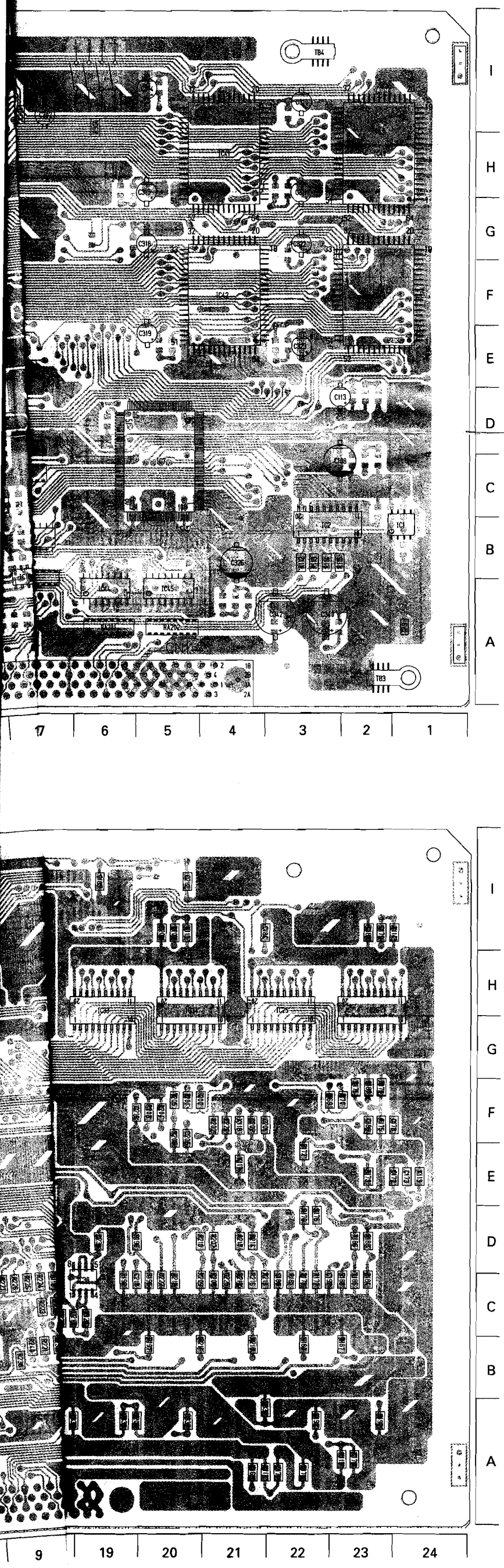


## ● ADDRESS TABLE OF BOARD PARTS

Side — A-1C — Y axis / X axis

Each address may have an address error by one interval.

| | | | | | | | | | | | | | | | |
|---|---|---|---|---|---|---|---|---|---|---|---|---|---|---|---|
| IC1 | A- 2C | R118 | B- 15A | R200 | B- 20F | C129 | A- 18G | C214 | A- 18D | K100 | B- 11A |
| IC2 | A- 3C | R119 | B- 16A | R201 | B- 20F | C130 | B- 18F | C215 | B- 18D | K101 | B- 2E |
| IC3 | A- 8B | R120 | B- 16A | R202 | B- 21F | C131 | A- 17E | C216 | B- 17I | K102 | B- 2D |
| IC4 | A- 9B | R121 | A- 14C | R203 | B- 20F | C132 | B- 17F | C217 | B- 19D | K103 | B- 15I |
| IC5 | A- 10B | R122 | A- 15C | R204 | B- 20F | C133 | B- 17F | C218 | A- 19C | K104 | B- 11B |
| IC6 | A- 10C | R123 | B- 2C | R205 | B- 20F | C134 | A- 16I | C219 | B- 19F | K105 | B- 15D |
| IC7 | A- 5D | R124 | B- 2C | R206 | B- 20F | C135 | B- 16I | C220 | B- 21F | K106 | B- 15F |
| IC8 | A- 13B | R125 | B- 2B | R207 | B- 21D | C136 | B- 15D | C221 | A- 20E | K107 | B- 15H |
| IC9 | A- 14B | R126 | B- 10B | R208 | B- 21D | C137 | A- 15D | C222 | B- 20D | K108 | B- 18F |
| IC10 | A- 13D | R127 | A- 13I | R209 | B- 20D | C138 | B- 14D | C223 | A- 20D | K109 | B- 17F |
| IC11 | A- 14H | R128 | A- 13I | R210 | B- 20D | C139 | B- 14C | C224 | A- 21E | K110 | B- 18D |
| IC12 | A- 14F | R129 | A- 13I | R211 | B- 20C | C140 | B- 13D | C225 | B- 21D | K111 | B- 16F |
| IC13 | A- 10B | R130 | A- 14I | R212 | B- 20D | C141 | B- 18A | C226 | A- 21C | K112 | B- 21A |
| IC14 | A- 18F | R131 | A- 14I | R213 | A- 17A | C142 | B- 16A | C227 | A- 18C | K113 | B- 24E |
| IC15 | A- 16B | R132 | A- 12I | R214 | B- 21D | C143 | B- 16A | C228 | B- 18C | K114 | B- 23I |
| IC16 | A- 17C | R133 | A- 13I | R215 | B- 21D | C145 | B- 16B | C229 | A- 19D | K115 | B- 23A |
| IC17 | A- 16C | R134 | A- 12I | R216 | B- 21D | C146 | B- 16B | C230 | B- 19D | K116 | A- 18B |
| IC18 | A- 15B | R135 | A- 12I | R217 | B- 21D | C147 | B- 16B | C231 | B- 17I | K117 | B- 21E |
| IC19 | A- 16D | R136 | A- 13I | R218 | B- 21C | C148 | B- 16C | C300 | B- 13A | K118 | B- 21F |
| IC20 | A- 18E | R137 | B- 18F | R219 | B- 21D | C149 | B- 17C | C301 | A- 11I | K119 | B- 20I |
| IC21 | A- 16F | R138 | B- 18F | R220 | A- 17A | C150 | B- 17C | C302 | A- 7I | K120 | B- 19C |
| IC22 | A- 13E | R139 | B- 18F | R221 | B- 9C | C151 | B- 15C | C303 | B- 11I | K200 | B- 11I |
| IC23 | A- 24E | R140 | B- 18F | R222 | B- 10C | C152 | B- 16C | C304 | B- 9H | K201 | B- 3H |
| IC24 | A- 22A | R141 | B- 17F | R223 | B- 9C | C153 | A- 16D | C305 | A- 7I | K202 | B- 6H |
| IC25 | B- 21H | R142 | B- 17A | R224 | B- 9D | C154 | B- 15B | C306 | A- 8E | K203 | B- 5E |
| IC26 | B- 23H | R143 | A- 16A | R225 | B- 9D | C155 | B- 15B | C307 | B- 10F | K204 | B- 3E |
| IC27 | A- 22G | R144 | A- 16A | R226 | B- 9D | C156 | B- 16D | C308 | B- 10G | K205 | B- 4A |
| IC28 | A- 19I | R145 | B- 16B | R227 | B- 9D | C157 | B- 16D | C309 | B- 4H | K206 | B- 19A |
| IC29 | A- 21I | R146 | B- 16B | R228 | B- 9D | C158 | B- 16D | C310 | A- 3I | | |
| IC30 | A- 18C | R147 | B- 17C | R229 | A- 15I | C159 | A- 19E | C311 | A- 3H | RA1 | A- 7B |
| IC31 | A- 21F | R148 | B- 16C | R230 | A- 13I | C160 | A- 19E | C312 | B- 3I | RA2 | A- 8B |
| IC32 | A- 17H | R149 | B- 16C | R231 | A- 12I | C161 | B- 18D | C313 | B- 6H | RA3 | A- 9B |
| IC33 | B- 18H | R150 | B- 16C | R232 | A- 12I | C162 | A- 17D | C314 | A- 5I | RA4 | A- 7C |
| IC34 | B- 20H | R151 | B- 15C | R233 | A- 14F | C163 | B- 18E | C315 | A- 5H | RA5 | A- 14A |
| IC35 | A- 20G | R152 | B- 16C | R234 | A- 14F | C164 | B- 18E | C316 | B- 5I | RA6 | A- 14D |
| IC36 | A- 20I | R153 | B- 15B | R235 | A- 15I | C165 | B- 16F | C317 | B- 5E | RA8 | A- 15I |
| IC37 | A- 23A | R154 | B- 15B | R236 | B- 12E | C166 | A- 16F | C318 | A- 5G | RA9 | A- 14I |
| IC38 | B- 18D | R155 | B- 15B | R237 | B- 12E | C167 | B- 16F | C319 | A- 5F | RA10 | A- 13F |
| IC39 | A- 9G | R156 | B- 16D | R238 | B- 9B | C168 | B- 17F | C320 | B- 6G | RA11 | A- 13A |
| IC40 | A- 2H | R157 | B- 16D | R239 | B- 10C | C169 | B- 21A | C321 | B- 4E | RA12 | A- 22G |
| IC41 | A- 4H | R158 | A- 16E | R240 | B- 9C | C171 | B- 22A | C322 | A- 3G | RA13 | A- 23G |
| IC42 | A- 4F | R159 | B- 16E | R241 | A- 9D | C172 | B- 23E | C323 | A- 3E | RA14 | A- 16H |
| IC43 | A- 2F | R160 | B- 16D | R242 | B- 8D | C173 | B- 24E | C324 | B- 3G | RA15 | A- 19G |
| IC44 | A- 6B | R161 | B- 15D | R243 | A- 9D | C174 | B- 22A | C325 | B- 4A | RA16 | A- 20G |
| IC45 | A- 5B | R162 | B- 16D | R244 | B- 6D | C175 | A- 22A | C326 | A- 4B | RA200 | A- 12A |
| IC46 | A- 13A | R163 | B- 15E | R300 | A- 6I | C176 | B- 23A | C327 | B- 4A | RA201 | A- 6A |
| | | R164 | B- 16E | R301 | A- 8E | C177 | A- 23F | C328 | B- 5B | RA202 | A- 5A |
| Q1 | A- 22E | R165 | A- 16E | R302 | B- 11F | C178 | B- 23F | C329 | B- 6B | | |
| Q2 | A- 22C | R166 | A- 17D | R303 | A- 12A | C179 | B- 23I | C330 | A- 21A | S1 | A- 6I |
| Q3 | A- 22C | R167 | B- 16D | R304 | B- 6G | C180 | A- 23I | C331 | B- 21B | | |
| Q4 | A- 23D | R168 | A- 17D | | | C181 | B- 23I | C332 | A- 19A | TB1 | A- 22I |
| Q5 | A- 23C | R169 | B- 22F | VR1 | A- 15E | C182 | A- 21H | C333 | B- 19A | TB2 | A- 24A |
| Q6 | A- 23C | R170 | B- 23F | | | C183 | A- 23H | C334 | A- 20A | TB3 | A- 1A |
| Q7 | A- 19E | R171 | B- 23G | C100 | B- 11A | C184 | B- 21I | C335 | B- 18A | TB4 | A- 3I |
| Q8 | A- 20C | R172 | B- 22F | C101 | B- 10A | C185 | B- 19I | C336 | A- 18A | | |
| Q9 | A- 19C | R173 | B- 23E | C102 | A- 11A | C186 | B- 23F | C337 | B- 18B | CN1 | A- 7A |
| Q10 | A- 20E | R174 | B- 23G | C103 | B- 8C | C187 | B- 23G | C338 | A- 20B | CN2 | A- 16A |
| Q11 | A- 21C | R175 | B- 23F | C104 | B- 9C | C188 | A- 22E | C339 | B- 20A | | |
| Q12 | A- 20C | R176 | B- 22E | C105 | B- 10C | C189 | B- 22D | C340 | A- 3A | X1 | A- 10C |
| Q13 | A- 21D | R177 | B- 22D | C106 | B- 2D | C190 | A- 22D | C341 | B- 3A | | |
| Q14 | A- 21C | R178 | B- 22D | C107 | B- 2D | C191 | A- 23E | C342 | A- 4A | | |
| Q15 | A- 21C | R179 | B- 22E | C108 | A- 3D | C192 | B- 22D | C343 | B- 4A | | |
| | | R180 | B- 22C | C109 | B- 3C | C193 | A- 23C | C344 | B- 11I | | |
| D100 | A- 16A | R181 | B- 22D | C110 | B- 2C | C194 | A- 22B | | | | |
| | | R182 | A- 17A | C111 | B- 1C | C195 | B- 22A | L1 | A- 19D | | |
| R100 | A- 7A | R183 | B- 23D | C112 | B- 2E | C196 | A- 24B | L2 | A- 20E | | |
| R101 | A- 7A | R184 | B- 23D | C113 | A- 3E | C197 | B- 23A | L3 | A- 21D | | |
| R102 | A- 7A | R185 | B- 23D | C114 | B- 2E | C198 | A- 18B | L4 | A- 22E | | |
| R103 | A- 8A | R186 | B- 23D | C115 | B- 6C | C200 | A- 18B | L5 | A- 23D | | |
| R104 | A- 8A | R187 | B- 23C | C116 | B- 6D | C201 | B- 21F | | | | |
| R105 | A- 8A | R188 | B- 23D | C117 | B- 5C | C202 | B- 21F | TP1 | A- 16B | | |
| R106 | A- 8A | R189 | A- 17A | C118 | B- 10D | C203 | A- 18H | TP2 | A- 17A | | |
| R107 | A- 9A | R190 | A- 16I | C119 | B- 13C | C204 | B- 18H | TP3 | A- 17B | | |
| R108 | A- 10A | R191 | B- 18I | C120 | B- 12F | C205 | A- 21F | TP4 | A- 17A | | |
| R109 | A- 9A | R192 | B- 17H | C121 | B- 14F | C206 | B- 20F | TP5 | A- 17B | | |
| R110 | A- 9A | R193 | B- 18I | C122 | B- 14F | C207 | B- 20I | TP6 | A- 24G | | |
| R111 | A- 10A | R194 | B- 17I | C123 | A- 14F | C208 | A- 20I | TP7 | A- 24A | | |
| R112 | A- 3B | R195 | B- 20D | C124 | B- 14F | C209 | B- 20I | TP8 | A- 11A | | |
| R113 | A- 3B | R196 | B- 19D | C125 | B- 11B | C210 | A- 18H | TP9 | A- 2A | | |
| R114 | A- 3B | R197 | B- 20C | C126 | A- 11B | C211 | A- 20H | TP10 | A- 4I | | |
| R115 | A- 3B | R198 | B- 19D | C127 | B- 10C | C212 | B- 20I | TP11 | A- 11I | | |
| R117 | B- 15A | R199 | A- 16A | C128 | B- 10C | C213 | B- 18C | | | | |

## 4.31 ANA IN SCHEMATIC DIAGRAMS (D85/D80)

### — DIAGRAM 1/3 —

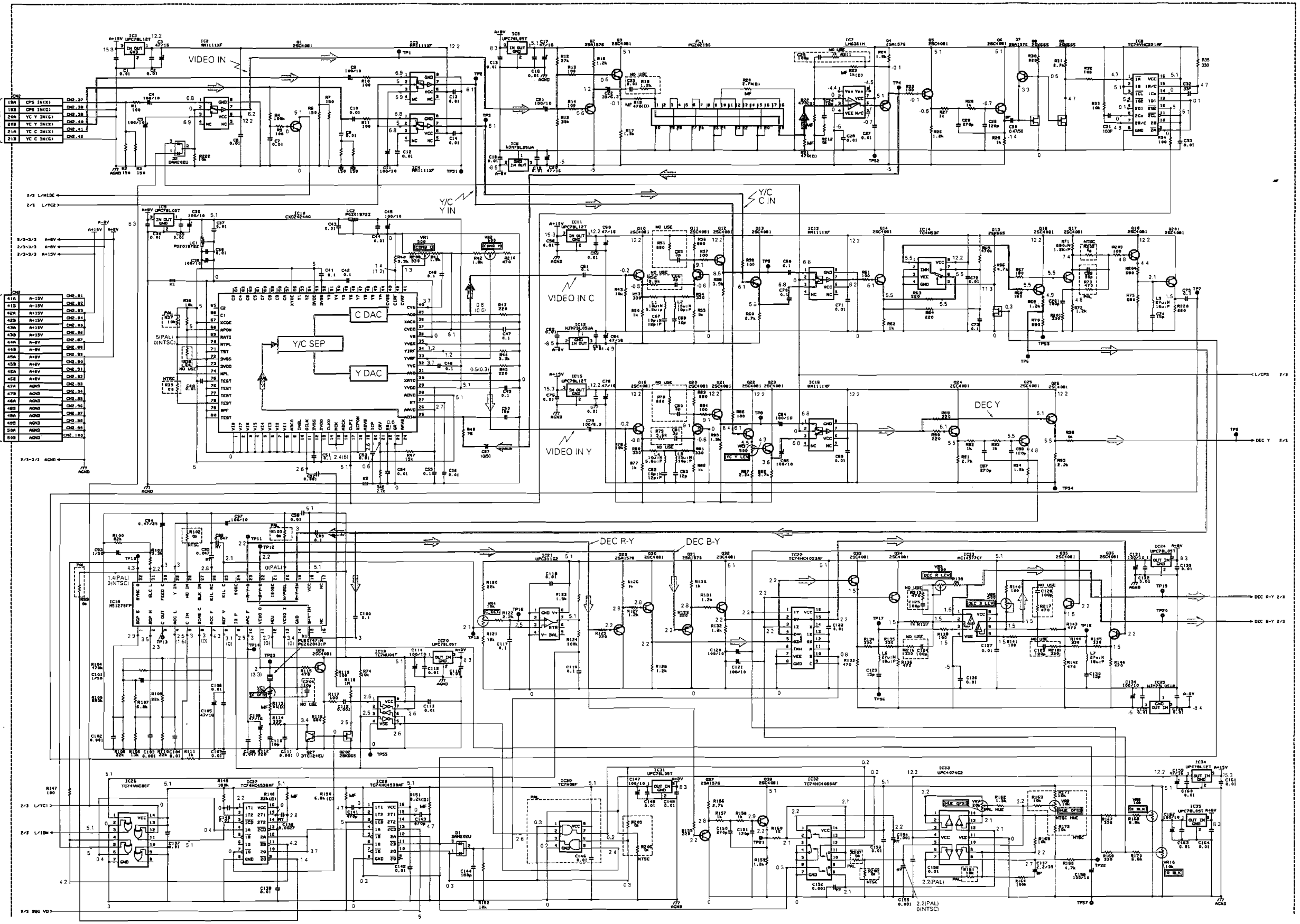

## — DIAGRAM 2/3 —

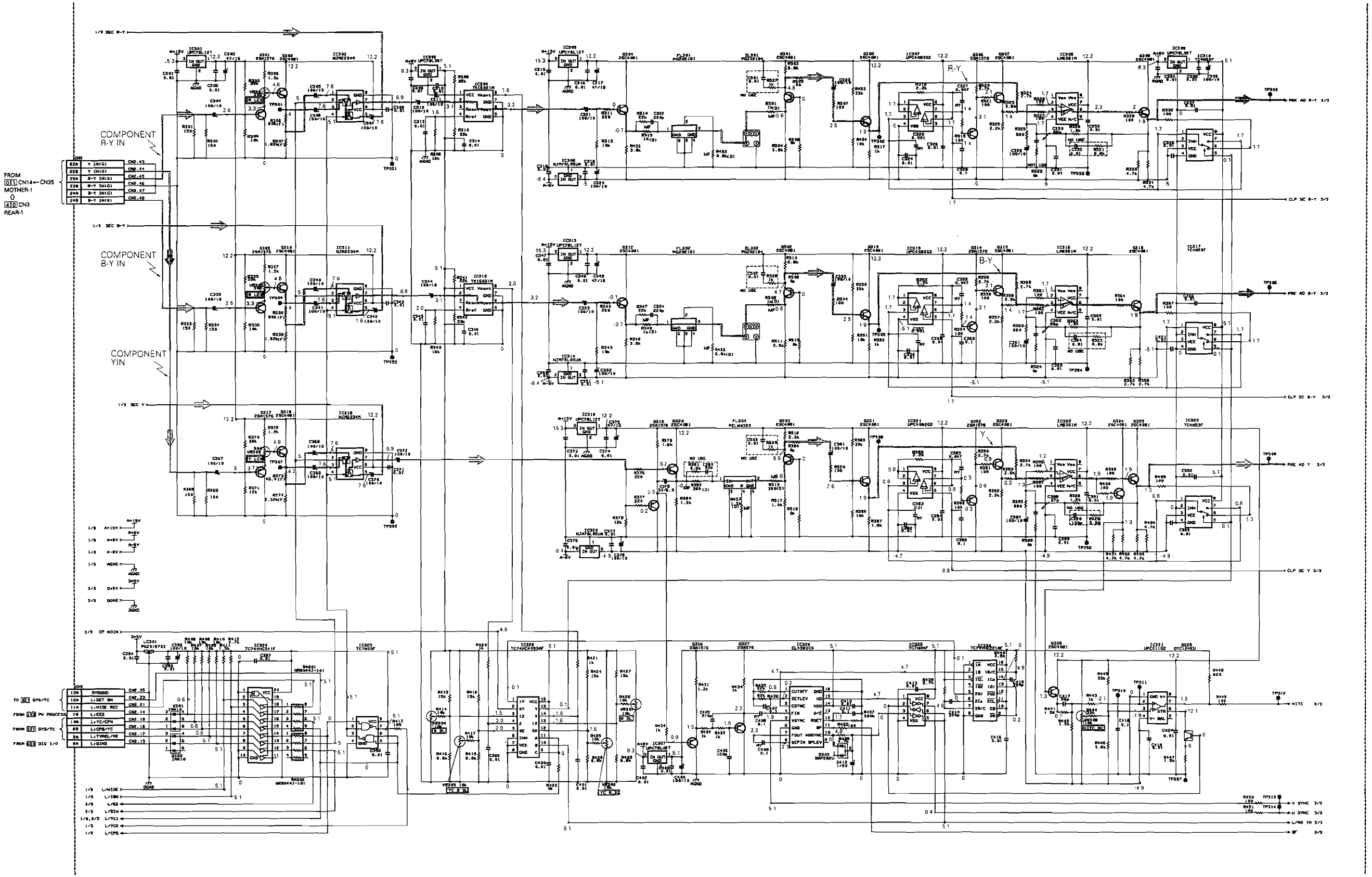
COMPONENT R-Y IN
COMPONENT B-Y IN
COMPONENT YIN
FROM
CN14←CN35
MOTHER-1
CN3
REAR-1
R-Y
B-Y
Y

## — DIAGRAM 3/3 —

- DC Voltage -

| SYMBOL | REC | PB | SYMBOL | REC | PB |
|---|---|---|---|---|---|
| IC610 : 1 | 1.1 | 1.1 | IC611 : 1 | 0.9 | 0.9 |
| 2 | 1.3 | 1.5 | 2 | 1.2 | 1.4 |
| 3 | 1.2 | 1.6 | 3 | 1.5 | 1.5 |
| 4 | 0 | 0 | 4 | 0 | 0 |
| 5 | 1.4 | 1.5 | 5 | 1.6 | 1.5 |
| 6 | 1.3 | 1.5 | 6 | 1.3 | 1.5 |
| 7 | 1.4 | 1.3 | 7 | 0.9 | 1 |
| 8 | 0 | 0 | 8 | 0 | 0 |
| 9 | 1.1 | 1.1 | 9 | 1.3 | 1.3 |
| 10 | 1.3 | 1.5 | 10 | 1.2 | 1.5 |
| 11 | 1.3 | 1.6 | 11 | 1.4 | 1.5 |
| 12 | 0 | 5.1 | 12 | 0 | 5.1 |
| 13 | 1.5 | 1.5 | 13 | 1.4 | 1.5 |
| 14 | 1.2 | 1.5 | 14 | 1.3 | 1.5 |
| 15 | 0.9 | 0.9 | 15 | 1.5 | 1.3 |
| 16 | 5.1 | 5.1 | 16 | 5.1 | 5.1 |

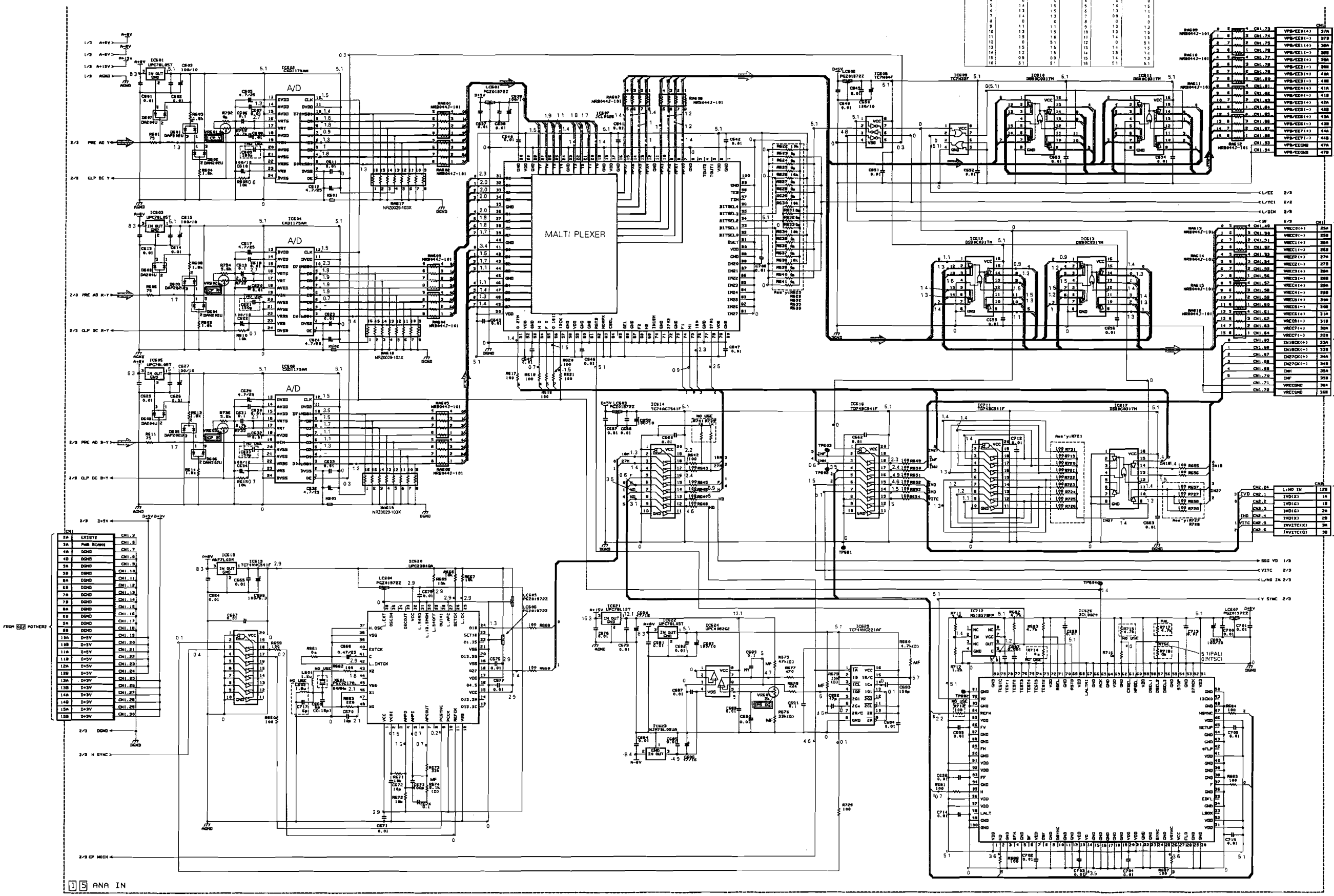

## 4.32 ANA IN CIRCUIT BOARD

**— SIDE A —**

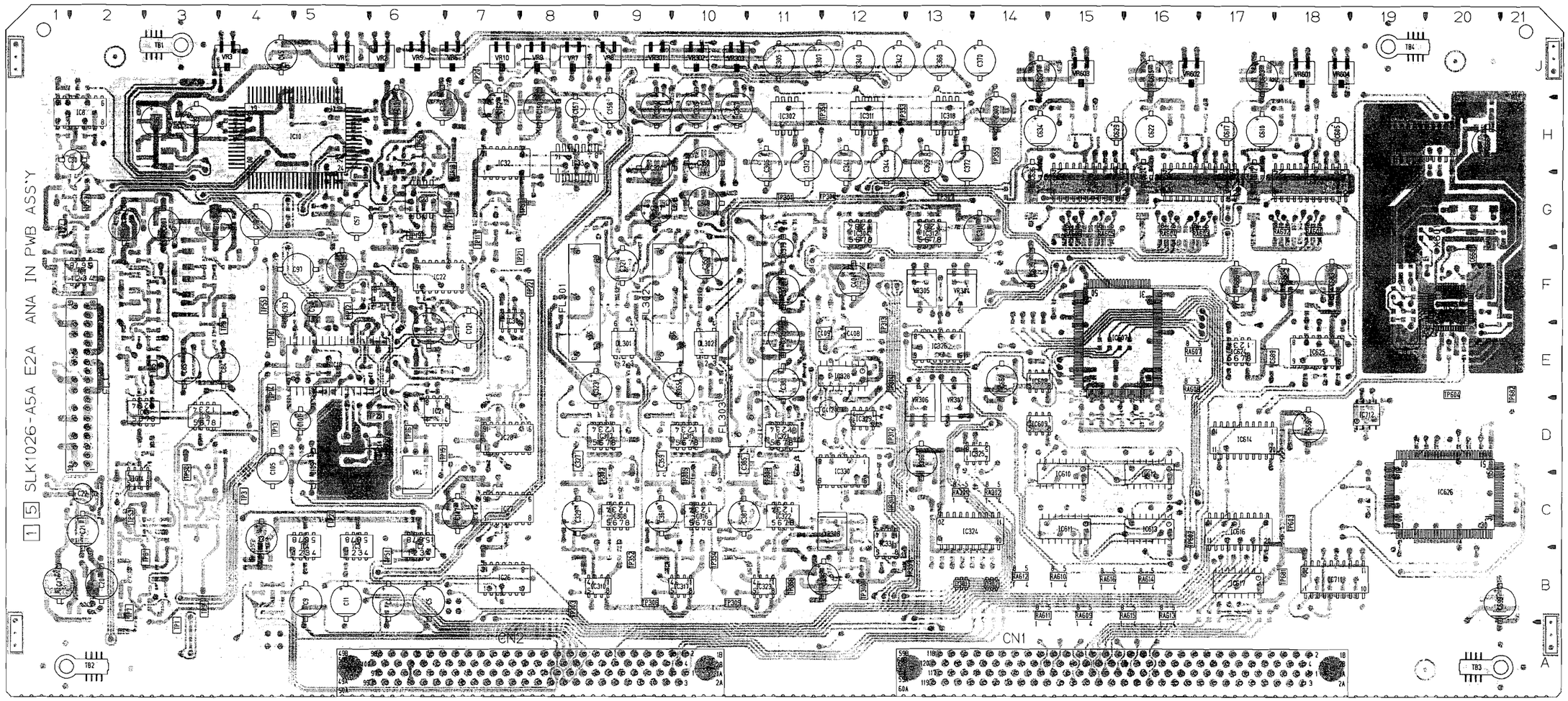


## ● ADDRESS TABLE OF BOARD PARTS

Side — A-1C — Y axis / X axis

Each address may have an address error by one interval.

| | | | | | | | | | | | | | | | | | | | | | | | | | | | | | | | | | | | |
|---|---|---|---|---|---|---|---|---|---|---|---|---|---|---|---|---|---|---|---|---|---|---|---|---|---|---|---|---|---|---|---|---|---|---|---|
| IC1 | B-4C | IC33 | A-8H | IC328 | A-12E | IC712 | A-19E | Q29 | B-6E | Q321 | B-11E | R3 | B-6B | R33 | B-2H | R63 | B-2D | R93 | B-3D | R125 | B-7E | R157 | B-7G | R217 | B-6G | R329 | B-9B | R360 | B-9D | R392 | B-11D | R422 | B-12E | R452 | B-9F | R529 | B-11E | R634 | B-15E |
| IC2 | A-6C | IC34 | B-8H | IC329 | A-12E | | | Q30 | B-6F | Q322 | B-10D | R4 | B-4B | R34 | B-2H | R64 | B-2D | R94 | B-3B | R126 | B-6E | R158 | B-7G | R218 | B-6H | R330 | B-8B | R361 | B-10D | R393 | B-11D | R423 | B-13E | R453 | B-9E | R601 | B-17G | R635 | B-15E |
| IC3 | A-5C | IC35 | B-7H | IC330 | A-12D | Q1 | B-4B | Q31 | B-6F | Q323 | B-11D | R5 | B-4B | R35 | B-1H | R65 | B-2D | R95 | B-3B | R127 | B-6E | R159 | B-7G | R220 | B-2B | R331 | B-8B | R362 | B-10D | R394 | B-11D | R424 | B-13E | R454 | B-9E | R603 | B-18H | R636 | B-15E |
| IC4 | A-4C | IC301 | B-14H | IC331 | A-12B | Q2 | B-2D | Q32 | B-6F | Q324 | B-12B | R6 | B-5B | R36 | B-4H | R66 | B-2D | R96 | B-3B | R128 | B-6F | R160 | B-7G | R222 | B-6B | R332 | B-8B | R363 | B-9B | R395 | B-10D | R425 | B-13E | R455 | B-8F | R604 | B-18H | R637 | B-15E |
| IC5 | B-1B | IC302 | A-11H | IC601 | B-17A | Q3 | B-1D | Q33 | B-6G | Q325 | B-11B | R7 | B-4B | R37 | B-3H | R67 | B-2D | R99 | B-6D | R129 | B-6F | R161 | B-8H | R301 | B-9H | R333 | B-10H | R364 | B-10B | R396 | B-11D | R426 | B-13E | R456 | B-9F | R605 | B-18H | R638 | B-15E |
| IC6 | B-2B | IC303 | B-14G | IC602 | A-18G | Q4 | B-2G | Q34 | B-6G | Q326 | B-12F | R8 | B-4B | R38 | B-4H | R68 | B-3D | R100 | B-4F | R130 | B-6F | R162 | B-8J | R302 | B-9H | R334 | B-10H | R365 | B-9B | R397 | B-11D | R427 | B-13E | R457 | B-11F | R606 | B-15G | R639 | B-15E |
| IC7 | A-1F | IC304 | A-12G | IC603 | B-16J | Q5 | B-1G | Q35 | B-6H | Q327 | B-12F | R9 | B-4B | R39 | B-3H | R69 | B-2D | R101 | B-4F | R131 | B-6F | R163 | B-9J | R303 | B-9H | R335 | B-10H | R366 | B-9B | R398 | B-10B | R428 | B-13E | R501 | B-9E | R608 | B-16H | R640 | B-15E |
| IC8 | A-1H | IC305 | B-9G | IC604 | A-16G | Q6 | B-1G | Q36 | B-6G | Q328 | B-12B | R10 | B-5B | R40 | B-5H | R70 | B-2D | R102 | B-5F | R132 | B-6F | R164 | B-8H | R304 | B-9H | R336 | B-10H | R367 | B-10B | R399 | B-11B | R429 | B-13E | R503 | B-9E | R609 | B-17H | R641 | B-16E |
| IC9 | B-3H | IC306 | B-9H | IC605 | B-14J | Q7 | B-2H | Q37 | B-7G | Q329 | B-12B | R11 | B-4B | R41 | B-5J | R71 | B-3B | R103 | B-5F | R133 | B-6G | R165 | B-8J | R305 | B-9J | R337 | B-10J | R368 | B-10H | R400 | B-11B | R430 | B-12F | R504 | B-9F | R610 | B-16H | R642 | B-15F |
| IC10 | A-4H | IC307 | A-9E | IC606 | A-15G | Q8 | B-1H | Q38 | B-7G | Q501 | B-9F | R12 | B-1B | R42 | B-5J | R72 | B-2B | R104 | B-4E | R134 | B-6G | R166 | B-8H | R306 | B-11H | R338 | B-12H | R369 | B-10H | R401 | B-12B | R431 | B-12F | R505 | B-8E | R611 | B-14G | R643 | B-15F |
| IC11 | B-3G | IC308 | A-9D | IC607 | A-15F | Q9 | B-1H | Q201 | B-3B | Q502 | B-10F | R13 | B-1D | R43 | B-5H | R73 | B-2B | R105 | B-4E | R135 | B-6G | R167 | B-8J | R307 | B-11H | R339 | B-12H | R370 | B-10H | R402 | B-11B | R432 | B-12F | R506 | B-9F | R613 | B-15H | R645 | B-16F |
| IC12 | B-2G | IC309 | B-12B | IC608 | A-14E | Q10 | B-3F | Q202 | B-5F | Q503 | B-10F | R14 | B-2D | R44 | B-6H | R74 | B-5E | R106 | B-4E | R136 | B-6G | R168 | B-8J | R308 | B-12G | R340 | B-13G | R371 | B-10H | R403 | B-10B | R433 | B-12F | R507 | B-9E | R614 | B-15H | R646 | B-16F |
| IC13 | A-2E | IC310 | A-8B | IC609 | A-14E | Q11 | B-2F | Q301 | B-9H | | | R15 | B-2B | R45 | B-5H | R75 | B-2B | R107 | B-4E | R137 | B-6G | R169 | B-7J | R309 | B-12G | R341 | B-13G | R372 | B-10J | R404 | B-10B | R434 | B-11F | R508 | B-10E | R615 | B-15H | R647 | B-17D |
| IC14 | A-2D | IC311 | A-12H | IC610 | A-15D | Q12 | B-2E | Q302 | B-11H | D1 | B-7E | R16 | B-1B | R46 | B-5G | R76 | B-4F | R108 | B-4E | R138 | B-6G | R170 | B-7J | R310 | B-12G | R342 | B-13G | R373 | B-13H | R405 | B-11B | R435 | B-12E | R509 | B-10E | R617 | B-14F | R648 | B-17D |
| IC15 | B-3G | IC312 | A-13G | IC611 | A-15B | Q13 | B-2E | Q304 | B-9F | D2 | B-6B | R17 | B-2D | R47 | B-5G | R77 | B-3G | R109 | B-5E | R139 | B-6J | R171 | B-8J | R311 | B-9G | R343 | B-10G | R374 | B-13H | R406 | B-13B | R436 | B-12E | R510 | B-10E | R618 | B-14F | R649 | B-17B |
| IC16 | A-3E | IC313 | B-10G | IC612 | A-16D | Q14 | B-2D | Q305 | B-9E | D301 | A-13B | R18 | B-1D | R48 | B-5G | R78 | B-3F | R110 | B-5E | R140 | B-7J | R172 | B-9J | R313 | B-9G | R344 | B-10E | R376 | B-11G | R407 | B-13B | R437 | B-12E | R511 | B-10F | R619 | B-14F | R650 | B-17B |
| IC18 | A-4E | IC314 | B-10H | IC613 | A-16B | Q15 | B-2D | Q306 | B-8D | D302 | A-14B | R19 | B-1D | R49 | B-2G | R79 | B-3F | R111 | B-4D | R141 | B-6G | R201 | B-2B | R314 | B-9G | R345 | B-10G | R377 | B-11G | R408 | B-14B | R438 | B-11E | R513 | B-10F | R620 | B-15F | R651 | B-14B |
| IC19 | A-6F | IC315 | A-10E | IC614 | A-18D | Q16 | B-3D | Q307 | B-9D | D303 | B-11E | R20 | B-1E | R50 | B-2F | R80 | B-3F | R112 | B-5D | R142 | B-6H | R202 | B-3B | R315 | B-9G | R346 | B-10F | R378 | B-12G | R409 | B-14B | R439 | B-12D | R515 | B-10E | R621 | B-15F | R652 | B-14B |
| IC20 | B-5F | IC316 | A-10D | IC615 | A-18B | Q17 | B-2B | Q308 | B-8B | D601 | B-18H | R21 | B-1F | R51 | B-3F | R81 | B-3F | R113 | B-6D | R143 | B-8H | R203 | B-3B | R317 | B-8E | R347 | B-9F | R379 | B-11G | R410 | B-14B | R440 | B-12D | R516 | B-11E | R622 | B-16E | R653 | B-14B |
| IC21 | A-6E | IC317 | A-10B | IC617 | A-17B | Q18 | B-2B | Q309 | B-10H | D602 | B-18H | R22 | B-1F | R52 | B-3F | R82 | B-3F | R114 | B-6E | R144 | B-8H | R204 | B-2B | R318 | B-9E | R348 | B-10G | R380 | B-11G | R411 | B-13B | R441 | B-12B | R517 | B-10E | R623 | B-16E | R654 | B-14B |
| IC22 | A-5F | IC318 | A-13H | IC618 | B-20H | Q19 | B-3F | Q310 | B-12H | D603 | B-16H | R23 | B-1G | R53 | B-2F | R83 | B-3F | R115 | B-5E | R145 | B-6G | R205 | B-7F | R319 | B-8D | R350 | B-10E | R381 | B-11G | R412 | B-13B | R442 | B-12B | R518 | B-11F | R624 | B-16E | R655 | B-18B |
| IC23 | A-6G | IC319 | B-11F | IC619 | A-20H | Q20 | B-3F | Q312 | B-10G | D604 | B-17H | R24 | B-1G | R54 | B-2F | R84 | B-3F | R116 | B-6F | R146 | B-6H | R206 | B-7F | R320 | B-9D | R351 | B-10E | R382 | B-11G | R413 | B-14D | R443 | B-12B | R520 | B-11E | R625 | B-16E | R656 | B-17B |
| IC24 | B-6H | IC320 | B-11F | IC620 | A-20F | Q21 | B-3E | Q313 | B-10E | D605 | B-15H | R25 | B-1G | R55 | B-2F | R85 | B-3F | R117 | B-6F | R147 | B-7B | R207 | B-8G | R321 | B-9D | R352 | B-9E | R384 | B-11E | R414 | B-13F | R444 | B-12B | R521 | B-8B | R626 | B-16E | R657 | B-17B |
| IC25 | B-6H | IC321 | A-11E | IC621 | B-18F | Q22 | B-3J | Q314 | B-9D | D606 | B-15H | R26 | B-2G | R56 | B-2E | R86 | B-3J | R118 | B-5F | R148 | B-7D | R208 | B-8G | R322 | B-8D | R353 | B-10E | R385 | B-11E | R415 | B-13F | R445 | B-12B | R522 | B-8B | R627 | B-16E | R658 | B-17B |
| IC26 | A-7B | IC322 | A-11D | IC622 | B-18F | Q23 | B-3E | Q315 | B-10D | D607 | B-17H | R27 | B-1G | R57 | B-3E | R87 | B-4J | R119 | B-5F | R149 | B-7B | R209 | B-5J | R323 | B-8D | R354 | B-9D | R386 | B-11E | R416 | B-13F | R446 | B-12B | R523 | B-9B | R628 | B-16E | R659 | B-20H |
| IC27 | A-7D | IC323 | A-11B | IC623 | B-17F | Q24 | B-3D | Q316 | B-10B | D608 | B-16H | R28 | B-1G | R58 | B-2E | R88 | B-3E | R120 | B-6E | R150 | B-7D | R210 | B-6J | R324 | B-9D | R355 | B-10D | R387 | B-11D | R417 | B-13F | R447 | B-12B | R524 | B-10B | R629 | B-16E | R660 | B-20H |
| IC28 | A-7D | IC324 | A-13B | IC624 | A-17E | Q25 | B-3D | Q317 | B-10H | D609 | B-14H | R29 | B-2G | R59 | B-2E | R89 | B-3D | R121 | B-6D | R151 | B-7E | R211 | B-1G | R325 | B-8D | R356 | B-10D | R388 | B-11E | R418 | B-13F | R448 | B-12D | R525 | B-10B | R630 | B-15E | R661 | B-20F |
| IC30 | A-7F | IC325 | A-14D | IC625 | A-18E | Q26 | B-3D | Q318 | B-13H | | | R30 | B-1H | R60 | B-2E | R90 | B-3D | R122 | B-6D | R152 | B-7E | R212 | B-2F | R326 | B-9D | R357 | B-10D | R389 | B-10D | R419 | B-13F | R449 | B-12D | R526 | B-11D | R631 | B-15E | R662 | B-20F |
| IC31 | B-7D | IC326 | A-13F | IC626 | A-20D | Q27 | B-6E | Q319 | B-11G | R1 | B-6B | R31 | B-1H | R61 | B-2D | R91 | B-3D | R123 | B-6E | R155 | B-7G | R215 | B-6G | R327 | B-9D | R358 | B-10D | R390 | B-11D | R420 | B-13F | R450 | B-12F | R527 | B-8F | R632 | B-15E | R663 | B-20G |
| IC32 | A-7H | IC327 | B-12F | IC711 | A-18B | Q28 | B-6F | Q320 | B-11G | R2 | B-6B | R32 | B-1H | R62 | B-2D | R92 | B-3D | R124 | B-6E | R156 | B-7G | R216 | B-6G | R328 | B-8B | R359 | B-10D | R391 | B-11D | R421 | B-13E | R451 | B-12E | R528 | B-9F | R633 | B-15E | R665 | B-20F |



4-64

— SIDE B —

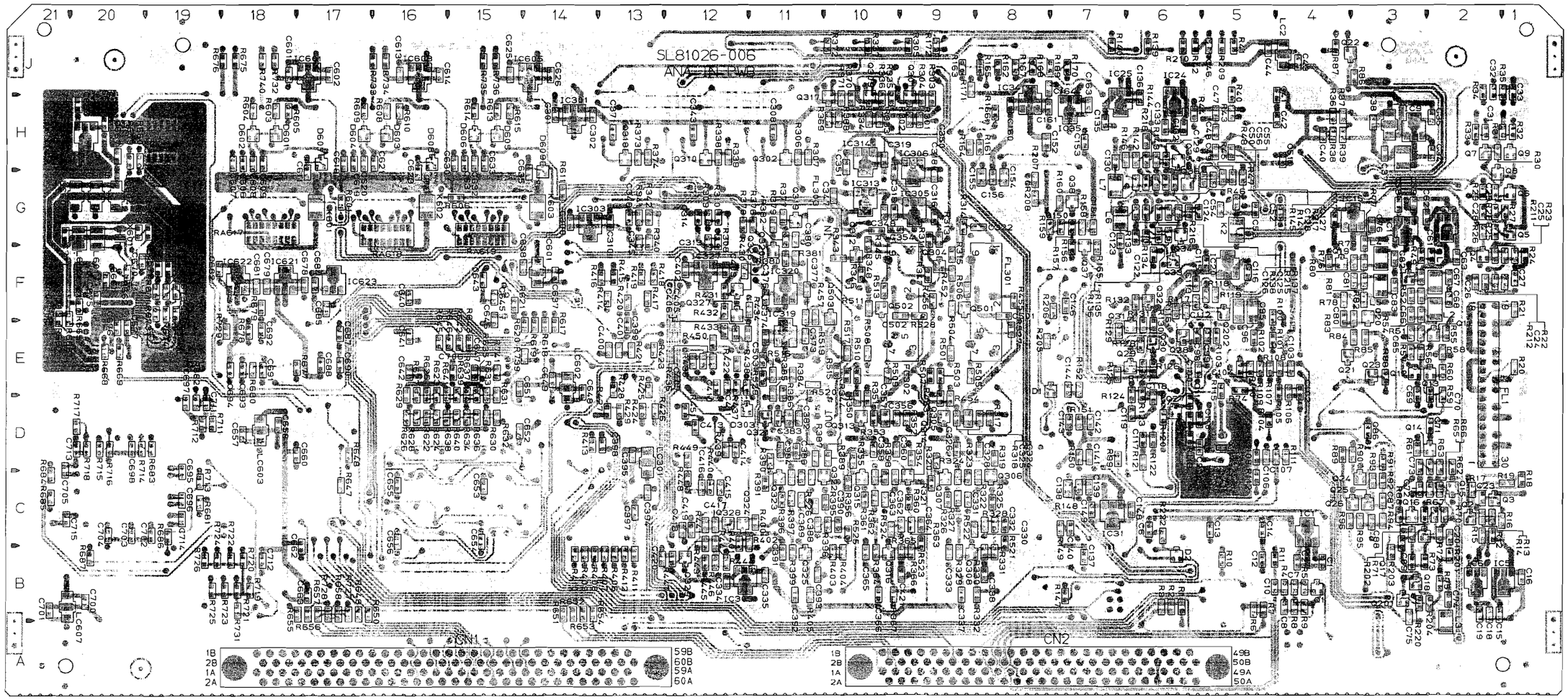


| | | | | | | | | | | | | | | | | | | | | | | | | | | | | | |
|---|---|---|---|---|---|---|---|---|---|---|---|---|---|---|---|---|---|---|---|---|---|---|---|---|---|---|---|---|---|
| R666 | B-21F | R720 | B-18B | VR301 | A-9J | C18 | B-1B | C48 | B-5H | C78 | A-3G | C111 | B-6E | C141 | B-7D | C306 | A-11H | C336 | A-12B | C366 | B-10B | C396 | A-13D | C602 | B-17J | C635 | B-14H | C667 | B-20H | C697 | B-19E | DL302 | A-10F | TP56 | A-6H | K2 | B-5G | RA613 | A-16B |
| R667 | B-21F | R721 | B-18B | VR302 | A-10J | C19 | B-2B | C49 | B-5H | C79 | A-4G | C112 | B-5F | C142 | B-7E | C307 | A-11J | C337 | B-9B | C367 | A-10H | C397 | B-13D | C603 | A-17J | C636 | A-14H | C668 | A-20G | C698 | B-20D | | | TP57 | A-7G | K601 | B-17G | RA614 | A-16B |
| R668 | B-20E | R722 | B-18B | VR303 | A-10J | C20 | A-2B | C50 | B-5G | C80 | B-3F | C113 | B-5F | C143 | B-7E | C308 | B-11H | C338 | B-8B | C368 | A-12J | C398 | B-13D | C605 | A-18H | C637 | B-14F | C669 | B-20G | C699 | A-21B | TP1 | A-3A | TP301 | A-11G | K602 | B-16G | RA615 | A-16B |
| R669 | B-20E | R723 | B-19B | VR304 | A-13F | C21 | A-2B | C51 | B-4H | C81 | B-3F | C114 | A-5F | C144 | B-7E | C309 | B-14G | C339 | A-10H | C369 | A-13H | C399 | B-13F | C606 | B-18H | C638 | B-15F | C670 | B-20F | C700 | B-20B | TP2 | A-5D | TP302 | A-8D | K603 | B-14G | RA616 | A-15B |
| R671 | B-19F | R724 | B-19B | VR305 | A-13F | C22 | A-2D | C52 | B-4G | C82 | B-3G | C115 | B-5F | C146 | B-7F | C310 | B-13G | C340 | A-12J | C370 | A-14J | C400 | B-13E | C607 | B-18H | C639 | A-14F | C671 | B-19F | C701 | B-21B | TP3 | A-4D | TP303 | A-8B | | | RA617 | B-18G |
| R672 | B-19F | R725 | B-19B | VR306 | A-13E | C23 | B-2D | C53 | B-5G | C83 | B-3F | C116 | B-5F | C147 | A-7D | C311 | A-14G | C341 | A-12H | C371 | B-13H | C401 | B-13E | C608 | B-18H | C640 | B-16F | C672 | B-19F | C702 | B-20B | TP4 | A-1G | TP304 | A-12G | LC1 | B-3H | RA618 | B-16G |
| R673 | B-19F | R726 | B-19B | VR307 | A-13E | C24 | B-1F | C54 | B-5G | C84 | A-3E | C117 | B-6D | C148 | B-6D | C312 | A-11H | C342 | A-13J | C372 | A-13H | C402 | B-12F | C609 | B-18H | C641 | B-16F | C673 | B-19F | C703 | B-20B | TP5 | A-2E | TP305 | A-10D | LC2 | B-4J | RA619 | B-15G |
| R674 | B-19F | R727 | B-17B | VR308 | A-12B | C25 | B-1G | C55 | B-5G | C85 | A-3E | C118 | B-6E | C149 | B-7D | C313 | B-12G | C343 | B-12H | C373 | B-11F | C403 | B-12F | C610 | A-17H | C642 | B-16E | C674 | B-19F | C704 | B-20B | TP6 | A-2B | TP306 | A-9B | LC301 | B-13D | | |
| R675 | B-18J | R728 | B-17B | VR601 | A-18J | C26 | B-2F | C56 | B-5G | C86 | B-3E | C119 | B-6E | C150 | B-7G | C314 | B-12G | C344 | A-12H | C374 | B-11F | C404 | A-12F | C611 | B-17H | C643 | B-15F | C675 | B-20F | C705 | B-21D | TP7 | A-2B | TP307 | A-13G | LC601 | B-14F | TB1 | A-3J |
| R676 | B-19J | R729 | B-19F | VR602 | A-16J | C27 | B-1F | C57 | A-5G | C87 | B-3D | C120 | A-6F | C151 | B-7G | C315 | B-10G | C345 | B-13G | C375 | A-11F | C405 | B-11F | C612 | A-17H | C645 | B-15F | C676 | B-20F | C706 | B-15E | TP8 | A-3F | TP308 | A-11D | LC602 | B-14E | TB2 | A-1A |
| R677 | B-18E | R731 | B-18B | VR603 | A-15J | C28 | B-2G | C58 | B-3G | C88 | B-3B | C121 | A-7F | C152 | B-7H | C316 | B-9G | C346 | B-13G | C376 | B-11F | C406 | B-12F | C613 | B-16J | C646 | B-15F | C677 | B-20F | C711 | B-19E | TP9 | A-3B | TP309 | A-10B | LC603 | B-18E | TB3 | A-21A |
| R678 | B-18F | R732 | B-18J | VR604 | A-18J | C29 | B-1G | C59 | B-3G | C89 | B-3B | C122 | B-6G | C153 | B-7H | C317 | A-9G | C347 | B-10G | C377 | B-11F | C407 | B-12E | C614 | B-16J | C647 | B-15E | C678 | B-17F | C712 | B-18B | TP10 | A-4F | TP310 | A-12B | LC604 | B-20G | TB4 | A-19J |
| R679 | B-18F | R733 | B-17J | | | C30 | A-1H | C60 | A-3G | C93 | A-4F | C123 | B-6G | C154 | B-8G | C318 | B-9H | C348 | B-10G | C378 | A-11F | C408 | A-12F | C615 | A-16J | C648 | B-14E | C679 | B-18F | C713 | B-21D | TP11 | A-7G | TP311 | A-12D | LC605 | B-21G | | |
| R680 | B-18E | R734 | B-16J | C1 | B-4B | C31 | B-2H | C61 | B-2G | C94 | A-5F | C124 | B-5G | C155 | B-8G | C319 | B-10H | C349 | A-10G | C379 | A-11G | C409 | A-12F | C617 | A-17H | C649 | B-14E | C680 | A-18F | C714 | B-19D | TP12 | A-5F | TP312 | A-12E | LC606 | B-20G | FL1 | A-2D |
| R681 | B-19D | R735 | B-15J | C2 | B-4B | C32 | B-1H | C62 | B-2G | C95 | B-5F | C125 | B-6G | C156 | B-8G | C320 | A-9H | C350 | B-10H | C380 | B-11G | C410 | B-12E | C618 | B-17H | C650 | A-14E | C681 | B-18F | C715 | B-21D | TP13 | A-4E | TP313 | A-12F | LC607 | B-21B | FL301 | A-8G |
| R682 | B-19E | R736 | B-15J | C3 | A-4B | C33 | B-1H | C63 | B-2G | C96 | B-5F | C126 | B-6G | C157 | A-8H | C321 | A-9F | C351 | B-10H | C381 | A-11E | C411 | B-12E | C619 | B-17H | C651 | B-15E | C682 | B-19F | C717 | B-21G | TP14 | A-4E | TP314 | A-12E | | | FL302 | A-9G |
| R683 | B-20D | R739 | B-15E | C4 | A-6B | C34 | B-2H | C64 | A-2G | C97 | A-4F | C127 | B-6G | C158 | A-9H | C322 | B-8G | C352 | A-10H | C382 | B-11E | C412 | A-12E | C620 | B-17H | C652 | B-15E | C683 | A-18F | | | TP15 | A-6D | TP351 | A-11H | RA301 | A-13D | FL303 | A-10G |
| R684 | B-21D | R740 | B-18J | C5 | A-6B | C35 | B-2H | C65 | B-2F | C98 | B-5F | C128 | B-6G | C159 | A-8H | C323 | A-8E | C353 | A-10F | C383 | B-11E | C413 | B-12E | C621 | B-17H | C653 | B-15D | C684 | B-17F | VC1 | A-6D | TP16 | A-6E | TP352 | A-9B | RA302 | A-14D | | |
| R685 | B-21D | R741 | B-15E | C6 | B-6B | C36 | A-3H | C66 | B-3F | C99 | B-5F | C129 | B-6H | C160 | B-8H | C324 | B-8E | C354 | B-10G | C384 | B-11D | C414 | B-12D | C622 | A-16H | C654 | B-15B | C685 | B-17F | | | TP17 | A-6G | TP353 | A-13H | RA601 | A-18G | | |
| R686 | B-19B | | | C7 | B-4B | C37 | B-3H | C67 | B-2F | C100 | B-5E | C130 | B-7H | C161 | B-7H | C325 | B-8E | C355 | A-10E | C385 | A-10D | C415 | B-12D | C623 | B-16H | C655 | B-16D | C686 | A-17F | L1 | B-2F | TP18 | A-7H | TP354 | A-10B | RA602 | A-18G | | |
| R687 | B-20B | VR1 | A-5J | C8 | B-4B | C38 | B-3H | C68 | B-2F | C101 | A-4E | C131 | A-6H | C162 | A-7H | C326 | B-9D | C356 | B-10E | C386 | B-11D | C416 | B-12D | C624 | A-16H | C656 | B-16B | C687 | B-17F | L2 | B-2F | TP19 | A-6G | TP355 | A-14H | RA603 | A-17G | | |
| R711 | B-19E | VR2 | A-6J | C9 | A-4B | C39 | A-3H | C69 | B-2E | C102 | B-4E | C132 | B-6H | C163 | B-7H | C327 | A-8D | C357 | B-10E | C387 | A-10D | C417 | B-12B | C625 | B-15J | C657 | B-18E | C688 | B-17E | L3 | B-2B | TP20 | A-7J | TP356 | A-11B | RA604 | A-16G | | |
| R712 | B-19E | VR3 | A-3J | C10 | B-4B | C40 | B-4H | C70 | B-2E | C103 | B-4E | C133 | B-6H | C164 | B-7J | C328 | B-8D | C358 | B-10D | C388 | B-11B | C418 | B-12B | C626 | B-14J | C658 | B-18E | C689 | A-18E | L4 | B-3G | TP21 | A-7G | TP357 | A-13B | RA605 | A-15G | | |
| R713 | B-19D | VR4 | A-6D | C11 | A-5B | C41 | B-4H | C71 | B-2E | C104 | B-5E | C134 | A-6H | C201 | B-2B | C329 | A-8D | C359 | A-9D | C389 | B-11D | C419 | B-12B | C627 | A-14J | C659 | A-18E | C690 | B-17E | L5 | B-3F | TP22 | A-8F | TP602 | A-16B | RA606 | A-15G | | |
| R714 | B-20D | VR5 | A-6J | C12 | B-5B | C42 | B-4H | C72 | B-2D | C105 | A-4D | C135 | B-7H | C204 | B-5D | C330 | B-8B | C360 | B-10D | C390 | B-10B | C420 | A-13B | C628 | A-15H | C660 | B-18D | C691 | B-18E | L6 | B-6G | TP23 | A-5E | TP603 | A-18B | RA607 | A-16E | | |
| R715 | B-20D | VR6 | A-7J | C13 | B-5B | C43 | B-4J | C73 | B-2D | C106 | B-4D | C136 | B-6H | C301 | B-14H | C331 | B-8D | C361 | A-9D | C391 | B-11B | C421 | B-9B | C630 | B-15H | C662 | B-18B | C692 | B-18F | L7 | B-7G | TP51 | A-6B | TP604 | A-20E | RA608 | A-16E | | |
| R716 | B-20D | VR7 | A-8J | C14 | B-5B | C44 | B-4J | C74 | B-2B | C107 | B-4D | C137 | B-7B | C302 | B-14H | C332 | B-8B | C362 | B-9B | C392 | B-11B | C501 | B-8F | C631 | B-15H | C663 | B-17B | C693 | B-18E | L601 | B-20G | TP52 | A-2G | TP681 | A-18B | RA609 | A-15B | | |
| R717 | B-21E | VR8 | A-9J | C15 | B-1B | C45 | A-4J | C75 | B-3B | C108 | B-5D | C138 | B-7D | C303 | A-14H | C333 | B-9B | C363 | B-10D | C393 | B-11B | C502 | B-9F | C632 | B-15H | C664 | B-20H | C694 | B-18E | L602 | B-20G | TP53 | A-2D | TP682 | A-21E | RA610 | A-15B | | |
| R718 | B-20D | VR9 | A-8J | C16 | B-1B | C46 | B-5J | C76 | B-3G | C109 | A-5D | C139 | B-7D | C304 | A-9H | C334 | B-12B | C364 | B-9B | C394 | B-13D | C503 | B-11E | C633 | B-15H | C665 | B-20H | C695 | B-19D | | | TP54 | A-3D | | | RA611 | A-14B | | |
| R719 | B-18B | VR10 | A-7J | C17 | A-1B | C47 | B-5H | C77 | B-4G | C110 | B-5E | C140 | B-7B | C305 | A-11J | C335 | B-11B | C365 | B-10B | C395 | B-13D | C601 | B-18J | C634 | A-14H | C666 | A-20H | C696 | B-19D | DL301 | A-9F | TP55 | A-4F | K1 | B-3H | RA612 | A-14B | | |


4-65

## MAIN WAVE FORMS OF "ANA IN" CIRCUIT [NTSC]

| TP1 | TP2 | TP3 | TP4 | TP5 | TP6 |
|---|---|---|---|---|---|
| | | 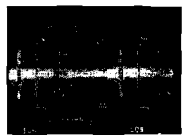 | | 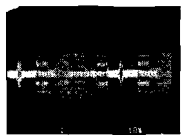 | 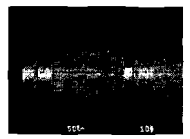 |
| [REC] 0.97Vp-p | [REC] 0.96Vp-p | [REC] 0.29V (Burst level) | [REC] 1.4Vp-p | [REC] 0.38V (Burst level) | [REC] 0.1V (Burst level) |
| **TP7** | **TP8,TP9** | **TP10** | **TP11** | **TP12** | **TP13** |
| 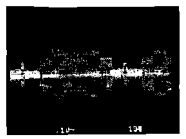 | | | 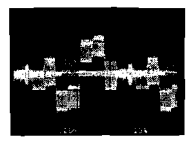 | 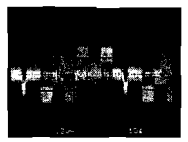 | |
| [REC] 0.33V (Burst level) | [REC] 0.85Vp-p | [REC] 4.75Vp-p | [REC] 0.95Vp-p | [REC] 0.7Vp-p | [REC] 0.3Vp-p |
| **TP15** | **TP17** | **TP18** | **TP19** | **TP20** | **TP21** |
| 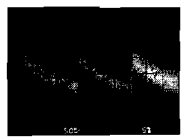 | 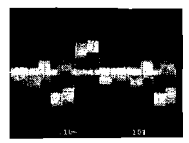 | | | 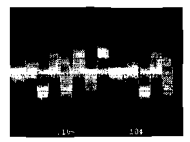 | |
| [REC] 0.15Vp-p | [REC] 0.4Vp-p | [REC] 0.3Vp-p | [REC] 0.5Vp-p | [REC] 0.5Vp-p | [REC] 0.7Vp-p |
| **TP23** | **TP302** | **TP303** | **TP305** | **TP306** | **TP308** |
| | | | | | 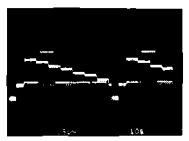 |
| [REC] 1Vp-p/14.3MHz | [REC] 0.6Vp-p | [REC] 1.2Vp-p | [REC] 0.6Vp-p | [REC] 1.2Vp-p | [REC] 1.4Vp-p |
| **TP309** | **TP311** | **TP313** | **TP314** | **TP302** | **TP603** |
| 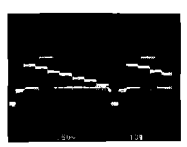 | 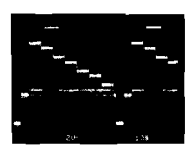 | 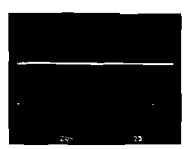 | | 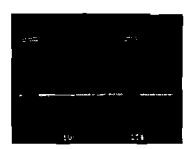 | |
| [REC] 2.4Vp-p | [REC] 1.2Vp-p | [REC] 5Vp-p/60Hz | [REC] 5Vp-p/15.75KHz | [REC] 3.5Vp-p | [REC] 3.5Vp-p/30Hz |
| **TP604** | | | | | |
| 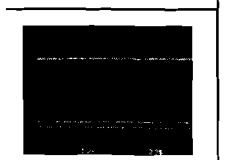 | | | | | |
| [REC] 4.5Vp-p/13.75MHz | | | | | |

## MAIN WAVE FORMS OF "ANA IN" CIRCUIT [PAL]

| TP1 | TP2 | TP3 | TP4 | TP5 | TP6 |
|---|---|---|---|---|---|
| | | 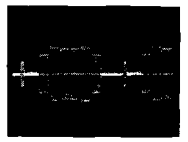 | | 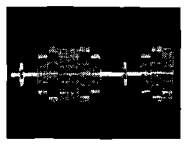 | 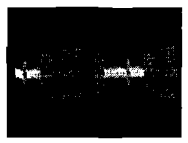 |
| [REC] 1Vp-p | [REC] 1Vp-p | [REC] 0.69Vp-p (0.3V: Burst level) | [REC] 1.4Vp-p | [REC] 0.7Vp-p (0.3V: Burst level) | [REC] 0.2Vp-p (0.1V: Burst level) |
| **TP7** | **TP8** | **TP9** | **TP10** | **TP11** | **TP12** |
| | 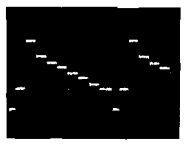 | | | 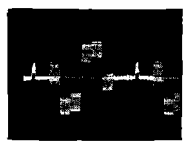 | |
| [REC] 0.7Vp-p (0.3V: Burst level) | [REC] 0.86Vp-p | [REC] 0.86Vp-p | [REC] 4.6Vp-p | [REC] 0.9Vp-p | [REC] 0.66Vp-p |
| **TP13** | **TP17** | **TP18** | **TP19** | **TP20** | **TP21** |
| | | | | | 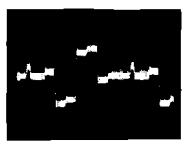 |
| [REC] 0.25Vp-p (0.13V: Burst level) | [REC] 0.4Vp-p | [REC] 0.3Vp-p | [REC] 0.54Vp-p | [REC] 0.55Vp-p | [REC] 0.76Vp-p |
| **TP23** | **TP302** | **TP303** | **TP305** | **TP306** | **TP308** |
| | | | | 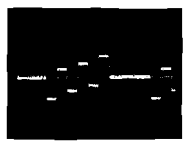 | |
| [REC] 1Vp-p/14.3MHz | [REC] 0.67Vp-p | [REC] 1.4Vp-p | [REC] 0.69Vp-p | [REC] 1.4Vp-p | [REC] 1.5Vp-p |
| **TP309** | **TP311** | **TP312** | **TP313** | **TP314** | **TP602** |
| | | 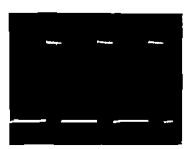 | 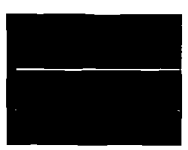 | 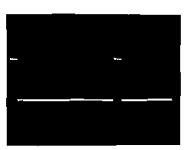 | |
| [REC] 2.6Vp-p | [REC] 1.3Vp-p | [REC] 5Vp-p | [REC] 5Vp-p (Vsync) | [REC] 5Vp-p | [REC] 3.7Vp-p |
| **TP603** | **TP604** | | | | |
| 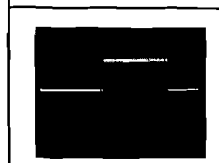 | 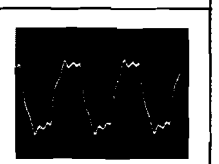 | | | | |
| [REC] 3.7Vp-p | [REC] 4.6Vp-p/13.5MHz | | | | |


4-66

## 4.33 OUT/GEN SCHEMATIC DIAGRAMS

### — DIAGRAM 1/3 —

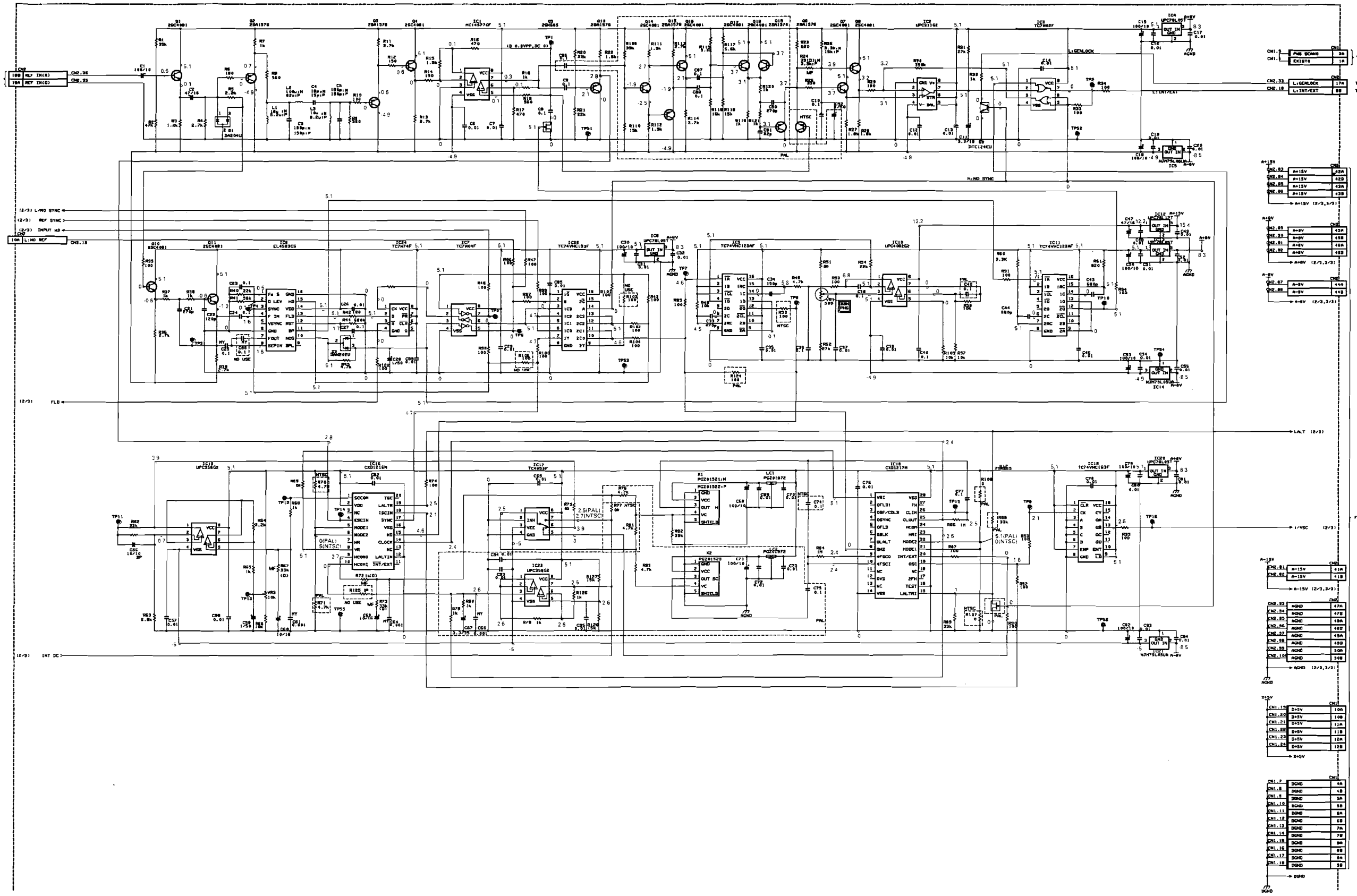

## — DIAGRAM 2/3 —

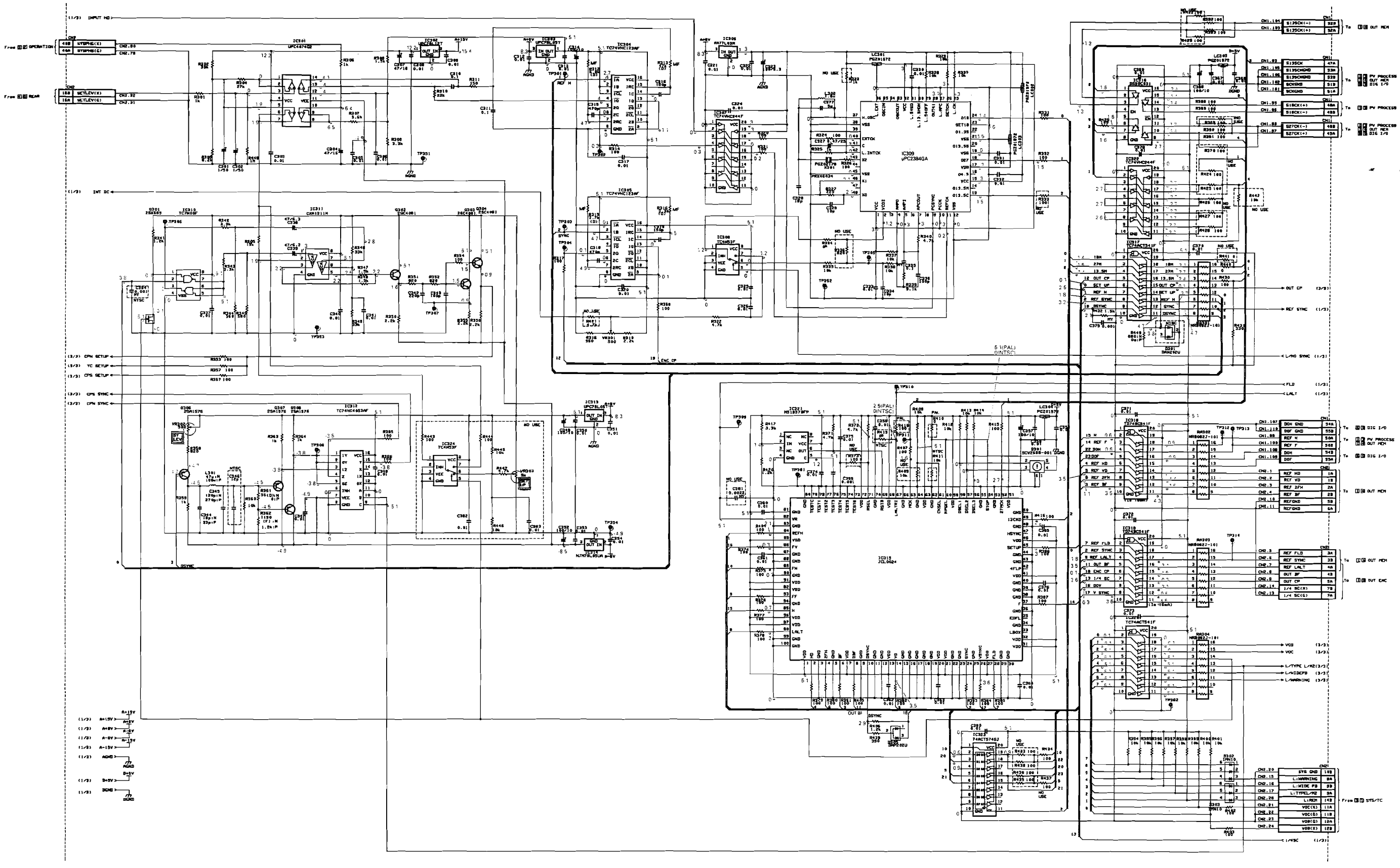

## — DIAGRAM 3/3 —

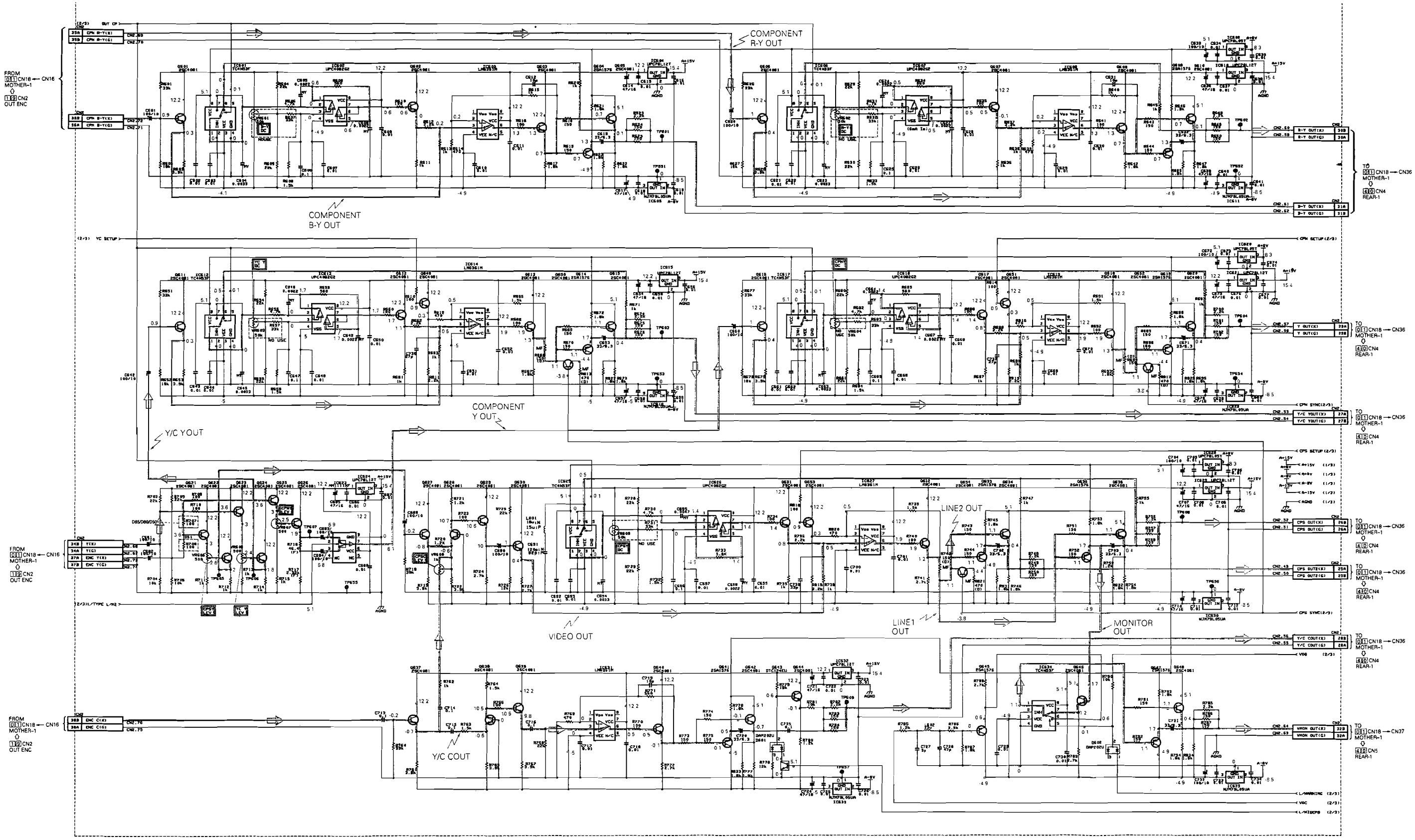
FROM 01 CN18 ← CN16 MOTHER-1
19 CN2 OUT ENC
COMPONENT B-Y OUT
COMPONENT R-Y OUT
TO 01 CN18 → CN36 MOTHER-1
40 CN4 REAR-1
COMPONENT Y OUT
Y/C YOUT
Y/C COUT
VIDEO OUT
LINE2 OUT
LINE1 OUT
MONITOR OUT
NO USE

## 4.34 OUT/GEN CIRCUIT BOARD

**— SIDE A —**

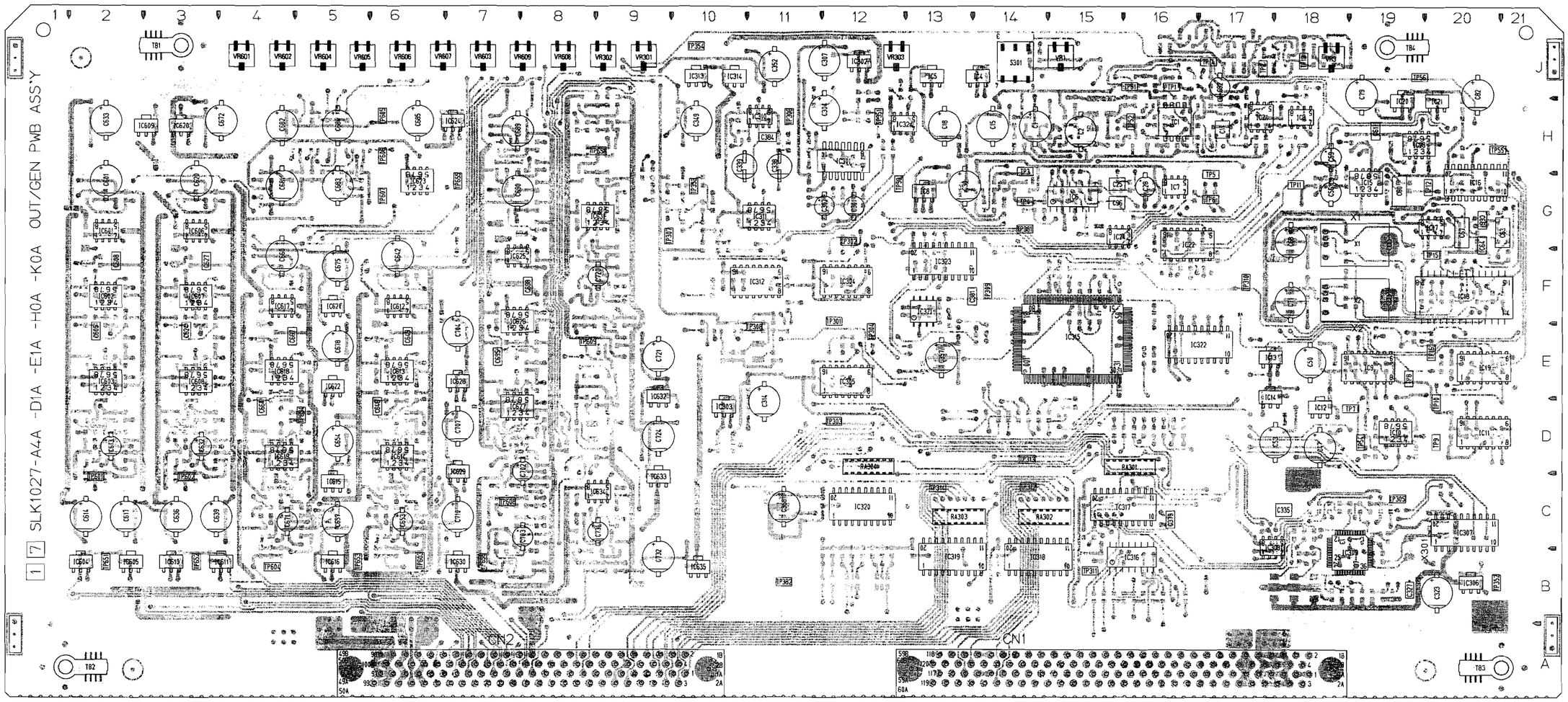


### ● ADDRESS TABLE OF BOARD PARTS

Side — A-1C — Y axis / X axis

Each address may have an address error by one interval.

| | | | | | | | | | | | | | | | | | | | | | | | | | | | | | | | |
|---|---|---|---|---|---|---|---|---|---|---|---|---|---|---|---|---|---|---|---|---|---|---|---|---|---|---|---|---|---|---|---|
| IC1 | A- 16H | IC305 | A- 12E | IC609 | A- 2H | Q1 | B- 14H | Q603 | B- 2E | Q631 | B- 7E | D302 | B- 12B | R23 | B- 17J | R51 | B- 14J | R82 | B- 19G | R110 | B- 16J | R310 | B- 12H | R338 | B- 19D | R366 | B- 10F | R394 | B- 12B | R422 | B- 16B | R601 | B- 2G | R629 | B- 3F | R657 | B- 6E | R686 | B- 4E |
| IC2 | A- 17H | IC306 | A- 20B | IC610 | A- 3B | Q2 | B- 15H | Q604 | B- 2D | Q632 | B- 7D | D303 | B- 12B | R24 | B- 17H | R52 | B- 14J | R83 | B- 19F | R111 | B- 17J | R311 | B- 12H | R339 | B- 19D | R367 | B- 9H | R395 | B- 12B | R423 | B- 16B | R602 | B- 2G | R630 | B- 3F | R658 | B- 6E | R687 | B- 4E |
| IC3 | A- 18H | IC307 | A- 20B | IC611 | A- 3B | Q3 | B- 16H | Q605 | B- 2D | Q633 | B- 7C | D305 | B- 15E | R25 | B- 17H | R53 | B- 19E | R84 | B- 19F | R112 | B- 17J | R312 | B- 12F | R340 | B- 18D | R368 | B- 12E | R396 | B- 12B | R424 | B- 16E | R603 | B- 2G | R631 | B- 3F | R659 | B- 6E | R688 | B- 4E |
| IC4 | A- 14J | IC308 | A- 18B | IC612 | A- 6F | Q4 | B- 16H | Q606 | B- 3G | Q634 | B- 7C | D601 | B- 9E | R26 | B- 17H | R54 | B- 19D | R85 | B- 20F | R113 | B- 17J | R313 | B- 12G | R341 | B- 11H | R369 | B- 16B | R397 | B- 12B | R425 | B- 16F | R604 | B- 2F | R632 | B- 3F | R660 | B- 6E | R689 | B- 4E |
| IC5 | A- 13J | IC309 | A- 19B | IC613 | A- 6E | Q5 | B- 17J | Q607 | B- 3E | Q635 | B- 7B | D602 | B- 8C | R27 | B- 17H | R57 | B- 20E | R86 | B- 20F | R114 | B- 17J | R314 | B- 12G | R342 | B- 11H | R370 | B- 16B | R398 | B- 12B | R426 | B- 17F | R605 | B- 2F | R633 | B- 3F | R661 | B- 6E | R691 | B- 4D |
| IC6 | A- 15G | IC310 | A- 11H | IC614 | A- 6D | Q6 | B- 17H | Q608 | B- 3E | Q636 | B- 7B | | | R28 | B- 17H | R58 | B- 19E | R87 | B- 20F | R115 | B- 17J | R315 | B- 12E | R343 | B- 11H | R371 | B- 15F | R399 | B- 12B | R427 | B- 17F | R606 | B- 2F | R634 | B- 3F | R662 | B- 6E | R692 | B- 4D |
| IC7 | A- 16G | IC311 | A- 11G | IC615 | A- 5C | Q7 | B- 17H | Q609 | B- 3D | Q637 | B- 8H | R1 | B- 14H | R29 | B- 17H | R60 | B- 21E | R88 | B- 21F | R116 | B- 17J | R316 | B- 12F | R344 | B- 11H | R372 | B- 15F | R400 | B- 12B | R428 | B- 17F | R607 | B- 2F | R635 | B- 3E | R663 | B- 6E | R693 | B- 4D |
| IC8 | A- 13G | IC312 | A- 10F | IC616 | A- 5B | Q8 | B- 17H | Q610 | B- 3D | Q638 | B- 9H | R2 | B- 14H | R30 | B- 17H | R61 | B- 20E | R89 | B- 21F | R117 | B- 18J | R317 | B- 12F | R345 | B- 11H | R373 | B- 15F | R401 | B- 12B | R429 | B- 16B | R608 | B- 2F | R636 | B- 3E | R665 | B- 6D | R694 | B- 4D |
| IC9 | A- 19E | IC313 | A- 10J | IC617 | A- 4F | Q9 | B- 18H | Q611 | B- 6F | Q639 | B- 8H | R3 | B- 14H | R31 | B- 17H | R62 | B- 18G | R90 | B- 20F | R118 | B- 18J | R318 | B- 10D | R346 | B- 11G | R374 | B- 14F | R402 | B- 12B | R430 | B- 16E | R609 | B- 2F | R637 | B- 3E | R666 | B- 6D | R695 | B- 4D |
| IC10 | A- 19E | IC314 | A- 10J | IC618 | A- 4E | Q10 | B- 14G | Q612 | B- 6E | Q640 | B- 8G | R4 | B- 14H | R32 | B- 18H | R63 | B- 18G | R91 | B- 20E | R119 | B- 18J | R319 | B- 10D | R347 | B- 10G | R375 | B- 14F | R403 | B- 12B | R431 | B- 16E | R610 | B- 2E | R638 | B- 3F | R667 | B- 6D | R696 | B- 4D |
| IC11 | A- 20E | IC315 | A- 15F | IC619 | A- 4D | Q11 | B- 14G | Q613 | B- 6C | Q641 | B- 9F | R5 | B- 15H | R33 | B- 18J | R64 | B- 19H | R92 | B- 21E | R120 | B- 18J | R320 | B- 20D | R348 | B- 10G | R376 | B- 14E | R404 | B- 13F | R432 | B- 16D | R611 | B- 2E | R639 | B- 3E | R668 | B- 6D | R697 | B- 4D |
| IC12 | A- 18E | IC316 | A- 15B | IC620 | A- 3H | Q12 | B- 20F | Q614 | B- 6B | Q642 | B- 8F | R6 | B- 15H | R34 | B- 18J | R65 | B- 19H | R93 | B- 20E | R121 | B- 18J | R321 | B- 20D | R349 | B- 11G | R377 | B- 14E | R405 | B- 14E | R433 | B- 13F | R612 | B- 2E | R640 | B- 3E | R669 | B- 6D | R698 | B- 4D |
| IC13 | A- 18E | IC317 | A- 15C | IC621 | A- 5F | Q13 | B- 16J | Q615 | B- 6B | Q643 | B- 8E | R7 | B- 15H | R35 | B- 14G | R66 | B- 18G | R94 | B- 21E | R122 | B- 15G | R322 | B- 17B | R350 | B- 10G | R378 | B- 14E | R406 | B- 15E | R434 | B- 13F | R613 | B- 2F | R641 | B- 3E | R670 | B- 6D | R699 | B- 4B |
| IC14 | A- 18E | IC318 | A- 14B | IC622 | A- 5E | Q14 | B- 16J | Q616 | B- 4F | Q644 | B- 9F | R8 | B- 15H | R36 | B- 13G | R67 | B- 19G | R95 | B- 20E | R123 | B- 16G | R323 | B- 19B | R351 | B- 10G | R379 | B- 14E | R407 | B- 15F | R435 | B- 13G | R614 | B- 2E | R642 | B- 3E | R671 | B- 6D | R700 | B- 4B |
| IC15 | A- 19G | IC319 | A- 13B | IC623 | A- 6G | Q15 | B- 17J | Q617 | B- 4E | Q645 | B- 9E | R9 | B- 16H | R37 | B- 14G | R68 | B- 19G | R96 | B- 17G | R124 | B- 19F | R324 | B- 19B | R352 | B- 10G | R380 | B- 15E | R408 | B- 15F | R436 | B- 13G | R615 | B- 2E | R643 | B- 3E | R672 | B- 6D | R701 | B- 4B |
| IC16 | A- 20G | IC320 | A- 12C | IC624 | A- 7H | Q16 | B- 17J | Q618 | B- 4C | Q646 | B- 8D | R10 | B- 15H | R38 | B- 14G | R69 | B- 21G | R97 | B- 16F | R125 | B- 21G | R325 | B- 19B | R353 | B- 9G | R381 | B- 16E | R409 | B- 15F | R437 | B- 13F | R616 | B- 2E | R644 | B- 3E | R673 | B- 6B | R702 | B- 4B |
| IC17 | A- 20G | IC321 | A- 13F | IC625 | A- 7G | Q17 | B- 18J | Q619 | B- 4B | Q647 | B- 9B | R11 | B- 16H | R39 | B- 14G | R70 | B- 20G | R98 | B- 16F | R126 | B- 19H | R326 | B- 19B | R354 | B- 10G | R382 | B- 16E | R410 | B- 15F | R438 | B- 13G | R617 | B- 2E | R645 | B- 3E | R674 | B- 6B | R703 | B- 4G |
| IC18 | A- 20F | IC322 | A- 16F | IC626 | A- 7F | Q18 | B- 18J | Q620 | B- 4B | Q648 | B- 8B | R12 | B- 16H | R40 | B- 15G | R71 | B- 20G | R99 | B- 16F | R127 | B- 19H | R327 | B- 19B | R355 | B- 9G | R383 | B- 16E | R411 | B- 15F | R439 | B- 15E | R618 | B- 2E | R646 | B- 3E | R675 | B- 6B | R704 | B- 4G |
| IC19 | A- 20E | IC323 | A- 13G | IC627 | A- 7E | Q19 | B- 18J | Q621 | B- 4H | Q649 | B- 6C | R13 | B- 16H | R41 | B- 14G | R72 | B- 21G | R100 | B- 17F | R128 | B- 19H | R328 | B- 19B | R356 | B- 9G | R384 | B- 16E | R412 | B- 15F | R440 | B- 15B | R619 | B- 2E | R647 | B- 3D | R676 | B- 6B | R705 | B- 4H |
| IC20 | A- 19H | IC324 | A- 13H | IC628 | A- 7E | Q301 | B- 10H | Q622 | B- 4H | Q650 | B- 6C | R14 | B- 16H | R42 | B- 15G | R73 | B- 20G | R101 | B- 16G | R301 | B- 12G | R329 | B- 19B | R357 | B- 9H | R385 | B- 16E | R413 | B- 15F | R441 | B- 15B | R620 | B- 2E | R648 | B- 3D | R677 | B- 4F | R706 | B- 4H |
| IC21 | A- 20H | IC601 | A- 2G | IC629 | A- 7D | Q302 | B- 10G | Q623 | B- 5H | Q651 | B- 4D | R15 | B- 16H | R43 | B- 15G | R74 | B- 20H | R102 | B- 16G | R302 | B- 12G | R330 | B- 19B | R358 | B- 11F | R386 | B- 16E | R414 | B- 15F | R442 | B- 15D | R621 | B- 2E | R649 | B- 3D | R678 | B- 4F | R707 | B- 4H |
| IC22 | A- 16G | IC602 | A- 2F | IC630 | A- 7B | Q303 | B- 10G | Q624 | B- 5H | Q652 | B- 5C | R16 | B- 16H | R44 | B- 15G | R75 | B- 20G | R103 | B- 16G | R303 | B- 12G | R331 | B- 18B | R359 | B- 11F | R387 | B- 16E | R415 | B- 16F | R443 | B- 12H | R622 | B- 2D | R650 | B- 3D | R679 | B- 4F | R708 | B- 4H |
| IC23 | A- 19H | IC603 | A- 2E | IC631 | A- 8G | Q304 | B- 10G | Q625 | B- 5H | Q653 | B- 7E | R17 | B- 16J | R45 | B- 16G | R76 | B- 21G | R104 | B- 17G | R304 | B- 12G | R332 | B- 18B | R360 | B- 10E | R388 | B- 15B | R416 | B- 16F | R444 | B- 12H | R623 | B- 2D | R651 | B- 6F | R680 | B- 4E | R709 | B- 5H |
| IC24 | A- 15G | IC604 | A- 2B | IC632 | A- 9E | Q306 | B- 11F | Q626 | B- 5H | Q654 | B- 8E | R18 | B- 16J | R46 | B- 17G | R77 | B- 21G | R105 | B- 15J | R305 | B- 12G | R333 | B- 18B | R361 | B- 11F | R389 | B- 15B | R417 | B- 13F | R445 | B- 12H | R624 | B- 2D | R652 | B- 6F | R681 | B- 4E | R710 | B- 5H |
| IC301 | A- 12H | IC605 | A- 2B | IC633 | A- 9D | Q307 | B- 10F | Q627 | B- 7H | | | R19 | B- 16H | R47 | B- 17G | R78 | B- 19H | R106 | B- 17G | R306 | B- 11H | R334 | B- 18D | R362 | B- 11F | R390 | B- 16B | R418 | B- 15F | R446 | B- 13H | R625 | B- 2D | R653 | B- 6F | R682 | B- 4E | R711 | B- 5H |
| IC302 | A- 12J | IC606 | A- 3G | IC634 | A- 8C | Q308 | B- 10F | Q628 | B- 7H | D1 | B- 15H | R20 | B- 16H | R48 | B- 19E | R79 | B- 20G | R107 | B- 20F | R307 | B- 12H | R335 | B- 18D | R363 | B- 10F | R391 | B- 16B | R419 | B- 15F | R447 | B- 13H | R626 | B- 3G | R654 | B- 6E | R683 | B- 4E | R712 | B- 5H |
| IC303 | A- 10E | IC607 | A- 3F | IC635 | A- 10B | Q601 | B- 2G | Q629 | B- 7G | D3 | B- 15G | R21 | B- 16H | R49 | B- 19E | R80 | B- 20G | R108 | B- 20F | R308 | B- 12H | R336 | B- 19D | R364 | B- 10F | R392 | B- 16B | R420 | B- 13F | R448 | B- 12G | R627 | B- 3G | R655 | B- 6E | R684 | B- 4E | R713 | B- 5H |
| IC304 | A- 12F | IC608 | A- 3E | | | Q602 | B- 2E | Q630 | B- 7G | D301 | B- 16C | R22 | B- 15J | R50 | B- 19F | R81 | B- 19G | R109 | B- 16J | R309 | B- 12H | R337 | B- 19D | R365 | B- 10F | R393 | B- 15B | R421 | B- 9J | R449 | B- 16D | R628 | B- 3G | R656 | B- 6E | R685 | B- 4E | R714 | B- 5H |

## MAIN WAVE FORMS OF "OUT/GEN" CIRCUIT [PAL]

| TP1 | TP3 | TP4 | TP5 | TP7 | TP8 |
|---|---|---|---|---|---|
| | 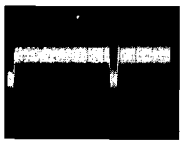 | 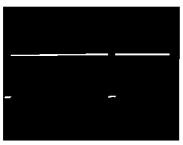 | | | 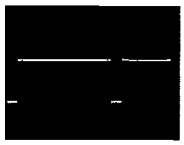 |
| [REC]<br>3Vp-p | [REC]<br>0.3Vp-p | [REC]<br>5.2Vp-p | [REC]<br>5.1Vp-p | [REC]<br>5.2Vp-p | [REC]<br>5.2Vp-p |
| **TP9** | **TP10** | **TP12** | **TP14** | **TP15** | **TP16** |
| 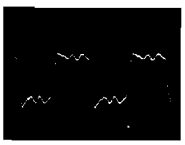 | 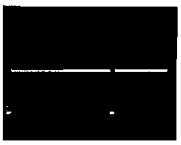 | 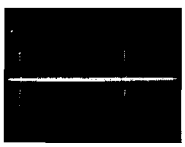 | 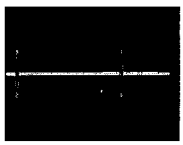 | 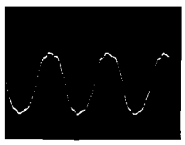 | |
| [REC]<br>6.8Vp-p | [REC]<br>5.1Vp-p | [REC]<br>8Vp-p | [REC]<br>3Vp-p | [REC]<br>8.8Vp-p/14.3MHz | [REC]<br>7.4Vp-p/1MHz |
| **TP603** | **TP604** | **TP605** | **TP606** | **TP607** | **TP301** |
| | | 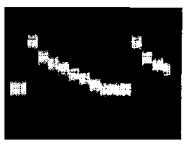 | 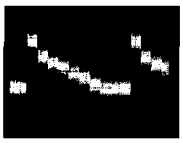 | 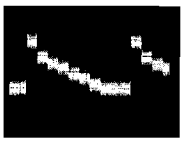 | |
| [REC]<br>2.1Vp-p | [REC]<br>2.1Vp-p | [REC]<br>0.7Vp-p | [REC]<br>0.6Vp-p | [REC]<br>0.6Vp-p | [REC]<br>5.2Vp-p |
| **TP302** | **TP303** | **TP304** | **TP308** | **TP309** | **TP310** |
| 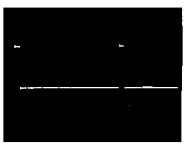 | 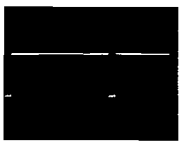 | | | | |
| [REC]<br>5.2Vp-p | [REC]<br>5.2Vp-p | [REC]<br>5.2Vp-p | [REC]<br>2.1Vp-p | [REC]<br>5.1Vp-p/25Hz | [REC]<br>5.1Vp-p |
| **TP311** | **TP312** | **TP313** | **TP314** | **TP601** | **TP602** |
| 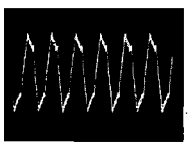 | 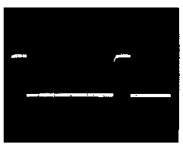 | | | | |
| [REC]<br>4.8Vp-p/13.5MHz | [REC]<br>5Vp-p | [REC]<br>5.1Vp-p/25Hz | [REC]<br>4.3Vp-p | [REC]<br>1.2Vp-p | [REC]<br>0.35Vp-p |
| **TP608** | **TP609** | | | | |
| | 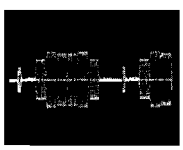 | | | | |
| [REC]<br>2.2Vp-p | [REC]<br>1.5Vp-p<br>(0.74V: Burst level) | | | | |

## MAIN WAVE FORMS OF "OUT/GEN" CIRCUIT [NTSC]

| TP1,TP2 | TP3 | TP4 | TP5 | TP7,TP8 | TP9 |
|---|---|---|---|---|---|
| | 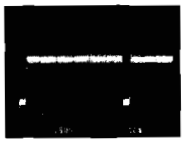 | | 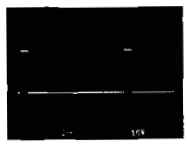 | | 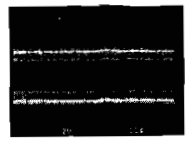 |
| [REC]<br>0.3Vp-p | [REC]<br>1.4Vp-p | [REC]<br>5Vp-p | [REC]<br>5.2Vp-p | [REC]<br>5Vp-p | [REC]<br>7.2Vp-p |
| **TP10** | **TP15** | **TP16** | **TP301** | **TP302** | **TP303** |
| | 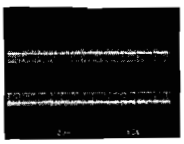 | 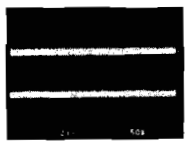 | | | |
| [REC]<br>5.2Vp-p | [REC]<br>6.5Vp-p | [REC]<br>6.1Vp-p | [REC]<br>5Vp-p | [REC]<br>5.2Vp-p | [REC]<br>5Vp-p |
| **TP304** | **TP306,TP307** | **TP309** | **TP311** | **TP312** | **TP313** |
| | 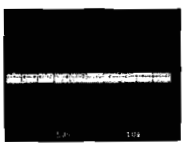 | | 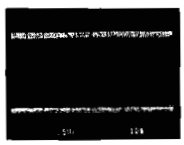 | | 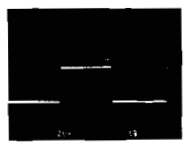 |
| [REC]<br>5Vp-p | [REC]<br>0.3Vp-p | [REC]<br>5Vp-p/30Hz | [REC]<br>2.7Vp-p | [REC]<br>4.9Vp-p | [REC]<br>5.5Vp-p/30Hz |
| **TP314** | **TP601** | **TP602** | **TP603,TP604** | **TP605,TP606,TP607** | **TP608** |
| 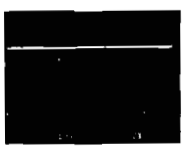 | | | | | |
| [REC]<br>4Vp-p | [REC]<br>1Vp-p | [REC]<br>1Vp-p | [REC]<br>2Vp-p | [REC]<br>0.7Vp-p | [REC]<br>2.1Vp-p |
| **TP609** | | | | | |
| 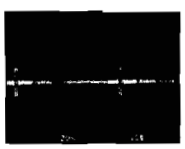 | | | | | |
| [REC]<br>0.7V<br>(Burst level) | | | | | |

— SIDE B —

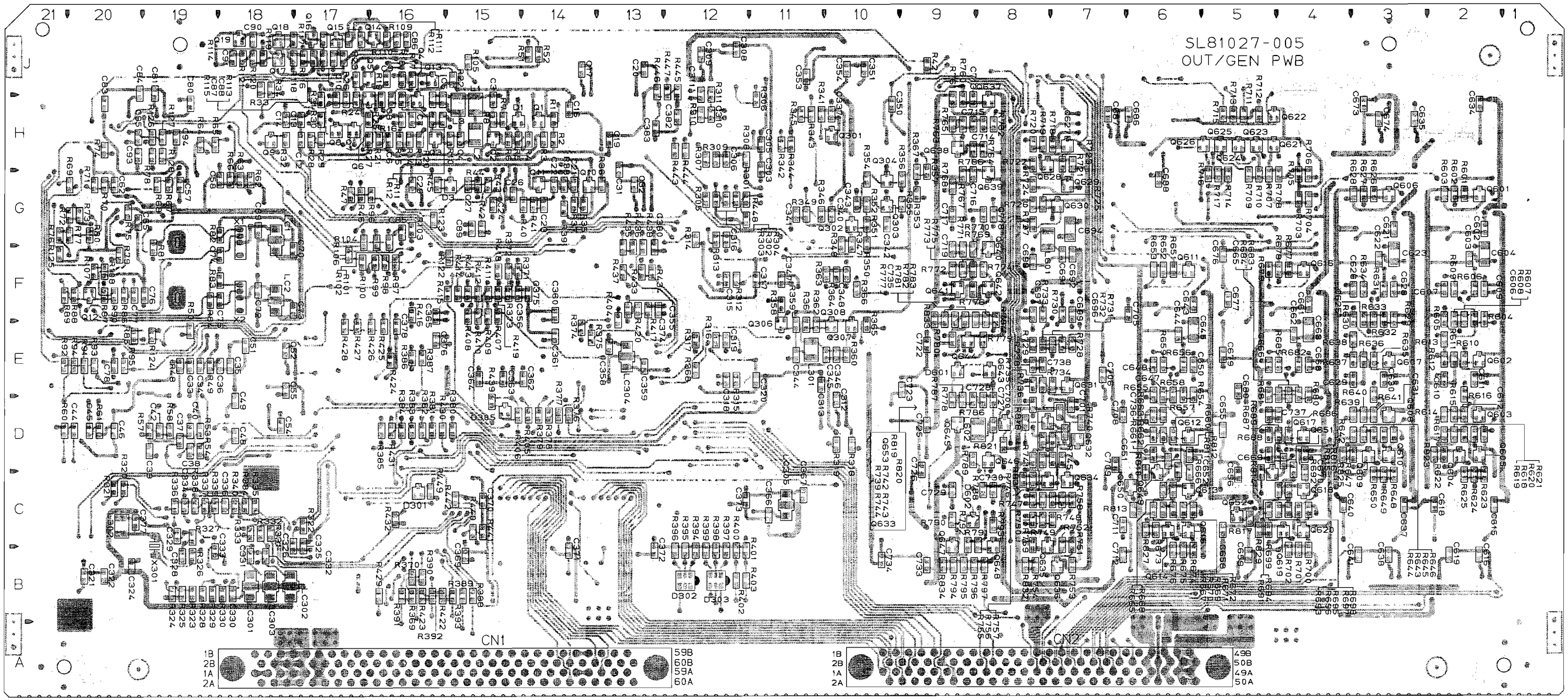


| | | | | | | | | | | | | | | | | | | | | | | | | | | | | | |
|---|---|---|---|---|---|---|---|---|---|---|---|---|---|---|---|---|---|---|---|---|---|---|---|---|---|---|---|---|---|
| R715 | B- 5H | R744 | B- 8D | R772 | B- 9F | R812 | B- 6D | VR605 | A- 5J | C23 | B- 14G | C53 | A- 18D | C81 | B- 19H | C313 | B- 11E | C341 | B- 11G | C369 | B- 15B | C613 | A- 2D | C641 | B- 3B | C669 | B- 4D | C697 | B- 8F | C725 | B- 9E | TP6 | A- 17G | TP312 | A- 14D | LC301 | B- 18B |
| R716 | B- 5H | R745 | B- 7D | R773 | B- 9F | R813 | B- 6D | VR606 | A- 6J | C24 | B- 15G | C54 | B- 18E | C82 | A- 20H | C314 | A- 11E | C342 | B- 10G | C370 | B- 15D | C614 | A- 2D | C642 | A- 6G | C670 | B- 4D | C698 | A- 8F | C726 | B- 9D | TP7 | A- 19E | TP313 | A- 14D | LC302 | B- 18B |
| R717 | B- 5H | R746 | B- 8D | R774 | B- 8F | R814 | B- 5D | VR607 | A- 6J | C25 | A- 15G | C55 | B- 18E | C83 | B- 20H | C315 | B- 12F | C343 | B- 10G | C371 | B- 14B | C615 | B- 1D | C643 | B- 6F | C671 | A- 4D | C699 | B- 7F | C727 | B- 8E | TP8 | A- 19E | TP314 | A- 13D | LC303 | B- 18B |
| R718 | B- 7H | R747 | B- 8D | R775 | B- 8F | R815 | B- 4D | VR608 | A- 8J | C26 | B- 15G | C56 | A- 18G | C84 | B- 20H | C316 | B- 12G | C344 | B- 11E | C372 | B- 13B | C616 | B- 2B | C644 | B- 6F | C672 | A- 3H | C700 | B- 8E | C728 | B- 8E | TP9 | A- 20D | TP351 | A- 12H | LC304 | B- 13E |
| R719 | B- 8H | R748 | B- 7D | R776 | B- 9F | R816 | B- 4D | VR609 | A- 7J | C27 | B- 15G | C57 | B- 19G | C85 | B- 16G | C317 | B- 11F | C345 | B- 10E | C373 | B- 12D | C617 | A- 2D | C645 | B- 6F | C673 | B- 3H | C701 | B- 7E | C729 | B- 9D | TP10 | A- 20E | TP352 | A- 21B | LC305 | B- 11D |
| R720 | B- 8H | R749 | B- 8D | R777 | B- 9F | R817 | B- 5D | | | C28 | A- 16G | C58 | B- 19G | C86 | B- 16J | C318 | B- 12E | C346 | B- 10E | C374 | B- 13F | C618 | B- 2D | C646 | A- 6E | C674 | B- 3H | C702 | A- 7D | C730 | B- 8D | TP11 | A- 18G | TP353 | A- 10G | | | |
| R721 | B- 7H | R750 | B- 8D | R778 | B- 9E | R818 | B- 8E | C1 | A- 14H | C29 | B- 16G | C59 | A- 18H | C87 | B- 17J | C319 | B- 12F | C347 | B- 11F | C375 | B- 14F | C619 | B- 2B | C647 | B- 6E | C675 | A- 5F | C703 | A- 7B | C731 | A- 8B | TP12 | A- 20G | TP354 | A- 10J | RA301 | A- 16D |
| R722 | B- 8H | R751 | B- 7B | R779 | B- 8F | R819 | B- 7E | C2 | A- 15H | C30 | A- 13G | C60 | A- 19G | C88 | B- 17J | C320 | B- 11E | C348 | B- 10F | C376 | B- 16F | C620 | A- 3G | C648 | B- 6E | C676 | B- 5G | C704 | A- 7F | C732 | A- 9B | TP13 | A- 18J | TP381 | A- 14G | RA302 | A- 15D |
| R723 | B- 7H | R752 | B- 7B | R780 | B- 9F | R820 | B- 7E | C3 | B- 15H | C31 | B- 13H | C61 | A- 19H | C89 | B- 15G | C321 | B- 20B | C349 | A- 10H | C377 | B- 20B | C621 | B- 3G | C649 | A- 6F | C677 | B- 5F | C705 | B- 6F | C733 | B- 9B | TP14 | A- 17J | TP382 | A- 11B | RA303 | A- 13D |
| R724 | B- 8G | R753 | B- 7B | R781 | B- 9F | R821 | B- 8D | C4 | B- 15H | C32 | B- 13G | C62 | B- 20G | C90 | B- 18J | C322 | B- 20B | C350 | B- 10H | C378 | B- 16F | C622 | B- 3G | C650 | B- 6E | C678 | A- 5F | C706 | B- 7E | C734 | B- 10B | TP15 | A- 20G | TP601 | A- 2D | RA304 | A- 12D |
| R725 | B- 8G | R754 | B- 8B | R782 | B- 8F | R823 | B- 2D | C5 | B- 16H | C33 | B- 19E | C63 | A- 21G | C91 | B- 18J | C323 | A- 20B | C351 | B- 10J | C379 | A- 16D | C623 | B- 3G | C651 | B- 6D | C679 | B- 5E | C707 | A- 7E | C735 | B- 9F | TP16 | A- 20E | TP602 | A- 3D | | |
| R726 | B- 8G | R755 | B- 8D | R783 | B- 8F | R825 | B- 3D | C6 | B- 16H | C34 | B- 19E | C64 | A- 20G | C92 | A- 17J | C324 | B- 20B | C352 | A- 11J | C380 | B- 13G | C624 | A- 3F | C652 | B- 6D | C680 | B- 5E | C708 | B- 6E | C736 | B- 6E | TP51 | A- 16J | TP603 | A- 6B | S301 | A- 14J |
| R727 | B- 8G | R756 | B- 7D | R784 | B- 8F | R827 | B- 6B | C7 | B- 16H | C35 | B- 18E | C65 | B- 20G | C93 | B- 20H | C325 | B- 17B | C353 | B- 11J | C381 | A- 14F | C625 | B- 3F | C653 | A- 6D | C681 | A- 4G | C709 | B- 7D | C737 | B- 4E | TP52 | A- 16H | TP604 | A- 4B | | |
| R728 | B- 7F | R757 | B- 7D | R785 | B- 8E | R829 | B- 5B | C8 | B- 16H | C36 | B- 19E | C66 | A- 20G | C94 | B- 19H | C326 | B- 18B | C354 | B- 10J | C382 | B- 12H | C626 | B- 3F | C654 | A- 5D | C682 | A- 4H | C710 | A- 7D | C738 | B- 8E | TP53 | A- 13G | TP605 | A- 6H | TB1 | A- 3J |
| R729 | B- 8F | R758 | B- 7D | R786 | B- 8E | R831 | B- 8D | C9 | B- 16J | C37 | B- 19D | C67 | A- 20G | C95 | B- 20H | C327 | A- 19B | C355 | B- 13F | C383 | B- 13H | C627 | A- 3G | C655 | B- 5E | C683 | A- 5G | C711 | B- 6B | | | TP54 | A- 19D | TP606 | A- 6H | TB2 | A- 1A |
| R730 | B- 7F | R759 | B- 8B | R787 | B- 9E | R832 | B- 8B | C10 | B- 17H | C38 | B- 19D | C68 | A- 18G | C96 | A- 15G | C328 | B- 19B | C356 | B- 15F | C384 | A- 11H | C628 | B- 3F | C656 | B- 5D | C684 | A- 5H | C712 | B- 6B | L1 | B- 15H | TP55 | A- 21H | TP607 | A- 6G | TB3 | A- 21A |
| R731 | B- 7F | R760 | B- 9H | R788 | B- 8D | R833 | B- 9F | C11 | A- 17H | C39 | B- 20D | C69 | B- 18G | C301 | A- 12G | C329 | B- 19B | C357 | A- 13E | C601 | A- 2G | C629 | B- 3E | C657 | A- 5D | C685 | A- 6H | C713 | B- 8H | L2 | B- 15H | TP56 | A- 20J | TP608 | A- 7D | TB4 | A- 19J |
| R732 | B- 7F | R761 | B- 9H | R789 | B- 8D | R834 | B- 9B | C12 | B- 18H | C40 | B- 19E | C70 | B- 18G | C302 | A- 12G | C330 | B- 18B | C358 | B- 13E | C602 | B- 2G | C630 | B- 3E | C658 | B- 5B | C686 | B- 6H | C714 | B- 8H | L3 | B- 15H | TP301 | A- 12F | TP609 | A- 8F | | |
| R733 | B- 8F | R762 | B- 8H | R790 | B- 9D | | | C13 | B- 18H | C42 | B- 19E | C71 | A- 18F | C303 | B- 11H | C331 | B- 18B | C359 | B- 13E | C603 | B- 2G | C631 | B- 3E | C659 | B- 5B | C687 | B- 7H | C715 | B- 8H | L301 | B- 11E | TP302 | A- 12G | TP651 | A- 2B | CN1 | A- 16A |
| R734 | B- 7E | R763 | B- 9H | R791 | B- 8B | VR1 | A- 15J | C14 | B- 18H | C44 | B- 21E | C72 | B- 18F | C304 | A- 12H | C332 | B- 18B | C360 | B- 14F | C604 | B- 2G | C632 | A- 3D | C660 | A- 4G | C688 | B- 6G | C716 | B- 8H | L302 | B- 20B | TP303 | A- 12E | TP652 | A- 3B | CN2 | A- 8A |
| R735 | B- 8E | R764 | B- 8H | R792 | B- 9B | VR3 | A- 18J | C15 | A- 14H | C45 | B- 20E | C73 | B- 18F | C305 | B- 11H | C333 | B- 19B | C361 | B- 14F | C605 | A- 2F | C633 | A- 2H | C661 | B- 4F | C689 | A- 7H | C717 | B- 9G | L601 | B- 7G | TP304 | A- 12F | TP653 | A- 5B | | |
| R736 | B- 8E | R765 | B- 9H | R793 | B- 8B | VR301 | A- 9J | C16 | B- 14H | C46 | B- 20E | C74 | B- 19G | C306 | B- 12H | C334 | B- 19D | C362 | B- 15E | C606 | B- 2F | C634 | B- 2H | C662 | B- 4F | C690 | A- 7G | C718 | B- 8G | L602 | B- 8E | TP305 | A- 19D | TP654 | A- 4E | X1 | A- 18G |
| R738 | B- 8E | R766 | B- 8H | R794 | B- 9B | VR302 | A- 9J | C17 | B- 14J | C47 | A- 18D | C75 | B- 19F | C307 | A- 12J | C335 | A- 18D | C363 | B- 15E | C607 | B- 2F | C635 | B- 3H | C663 | B- 4F | C691 | B- 7G | C719 | B- 9G | | | TP306 | A- 11H | TP655 | A- 7G | X2 | A- 18F |
| R739 | B- 8D | R767 | B- 9H | R795 | B- 9B | VR303 | A- 12J | C18 | A- 13H | C48 | B- 18E | C76 | B- 20F | C308 | B- 12J | C336 | B- 19D | C364 | B- 15E | C608 | A- 2G | C636 | A- 3D | C664 | A- 4E | C692 | B- 7G | C720 | A- 8F | TP1 | A- 16J | TP307 | A- 9G | TP656 | A- 7B | X301 | A- 19B |
| R740 | B- 7E | R768 | B- 9G | R796 | B- 8B | VR601 | A- 4J | C19 | B- 13H | C49 | B- 18E | C77 | B- 20F | C309 | B- 12J | C337 | B- 10H | C365 | B- 16F | C609 | B- 2F | C637 | B- 3D | C665 | B- 4E | C693 | B- 8F | C721 | A- 9E | TP2 | A- 17J | TP308 | A- 11F | TP657 | A- 8H | | |
| R741 | B- 8D | R769 | B- 8G | R797 | B- 8B | VR602 | A- 4J | C20 | B- 13J | C50 | A- 18E | C78 | B- 20E | C310 | B- 12H | C338 | A- 11H | C366 | B- 11D | C610 | B- 2E | C638 | B- 3B | C666 | B- 4E | C694 | B- 7G | C722 | B- 9F | TP3 | A- 14H | TP309 | A- 14F | | | | |
| R742 | B- 7D | R770 | B- 8G | R810 | B- 6D | VR603 | A- 7J | C21 | B- 14G | C51 | B- 18F | C79 | A- 19H | C311 | B- 12H | C339 | A- 10H | C367 | B- 11D | C611 | B- 2E | C639 | A- 3D | C667 | A- 4F | C695 | A- 7E | C723 | B- 9E | TP4 | A- 14G | TP310 | A- 17F | LC1 | B- 18G | | |
| R743 | B- 7D | R771 | B- 9G | R811 | B- 6D | VR604 | A- 5J | C22 | B- 14G | C52 | B- 18E | C80 | B- 19H | C312 | B- 10E | C340 | B- 10G | C368 | A- 11D | C612 | B- 2E | C640 | B- 3D | C668 | B- 4E | C696 | B- 8F | C724 | A- 9E | TP5 | A- 17H | TP311 | A- 15B | LC2 | B- 18F | | |

## 4.35 OUT ENC SCHEMATIC DIAGRAMS

### — DIAGRAM 1/2 —

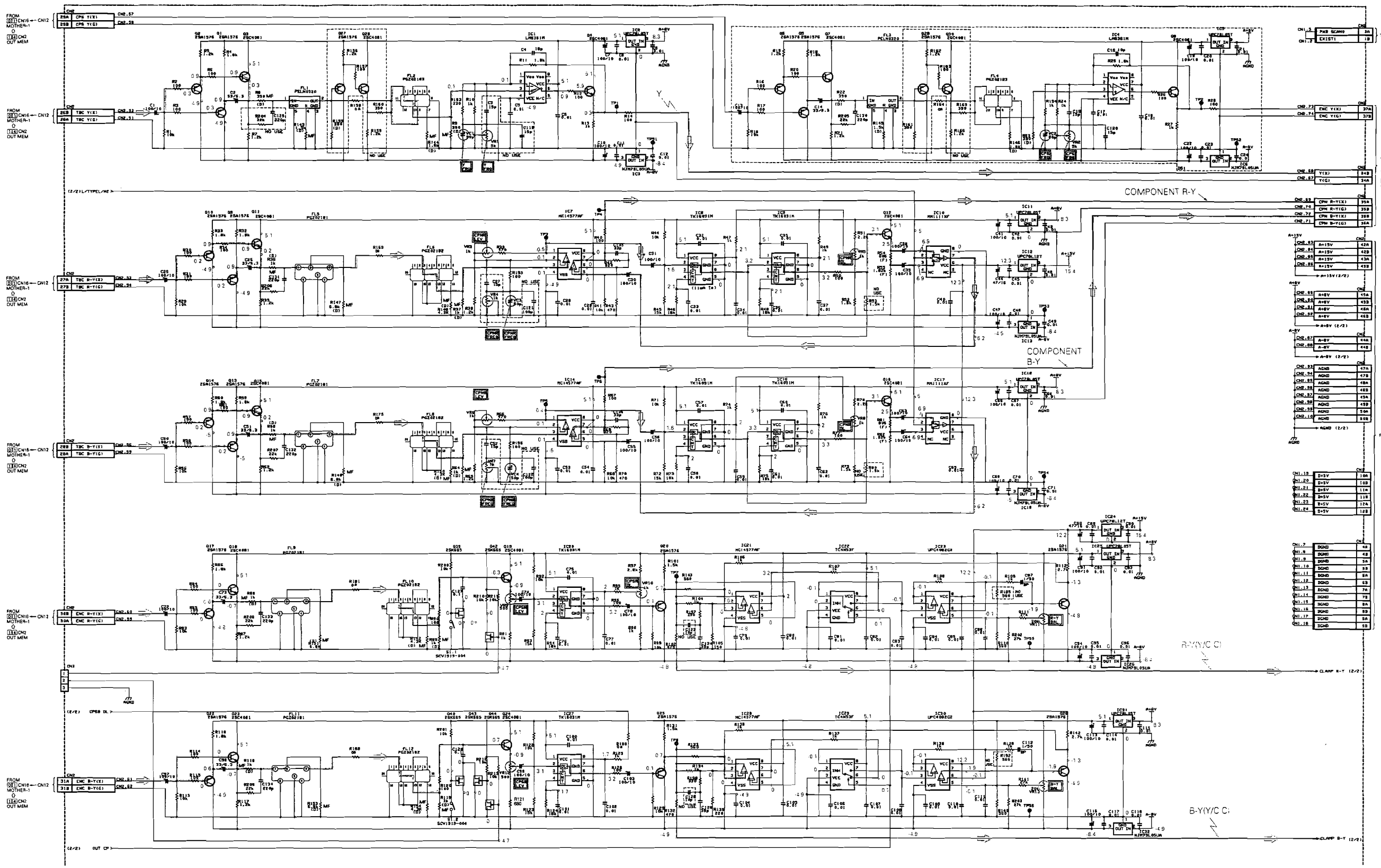


NOTE:UNLESS OTERWISE SPECIFIED:
ALL RESISTANCE VALUES ARE IN OHMS.
ALL INDUCTANCE VALUES ARE IN H.
ALL CAPACITANCE VALUES ARE IN uF


4-74

VIDE-V20471 / Druck 54

# — DIAGRAM 2/2 —

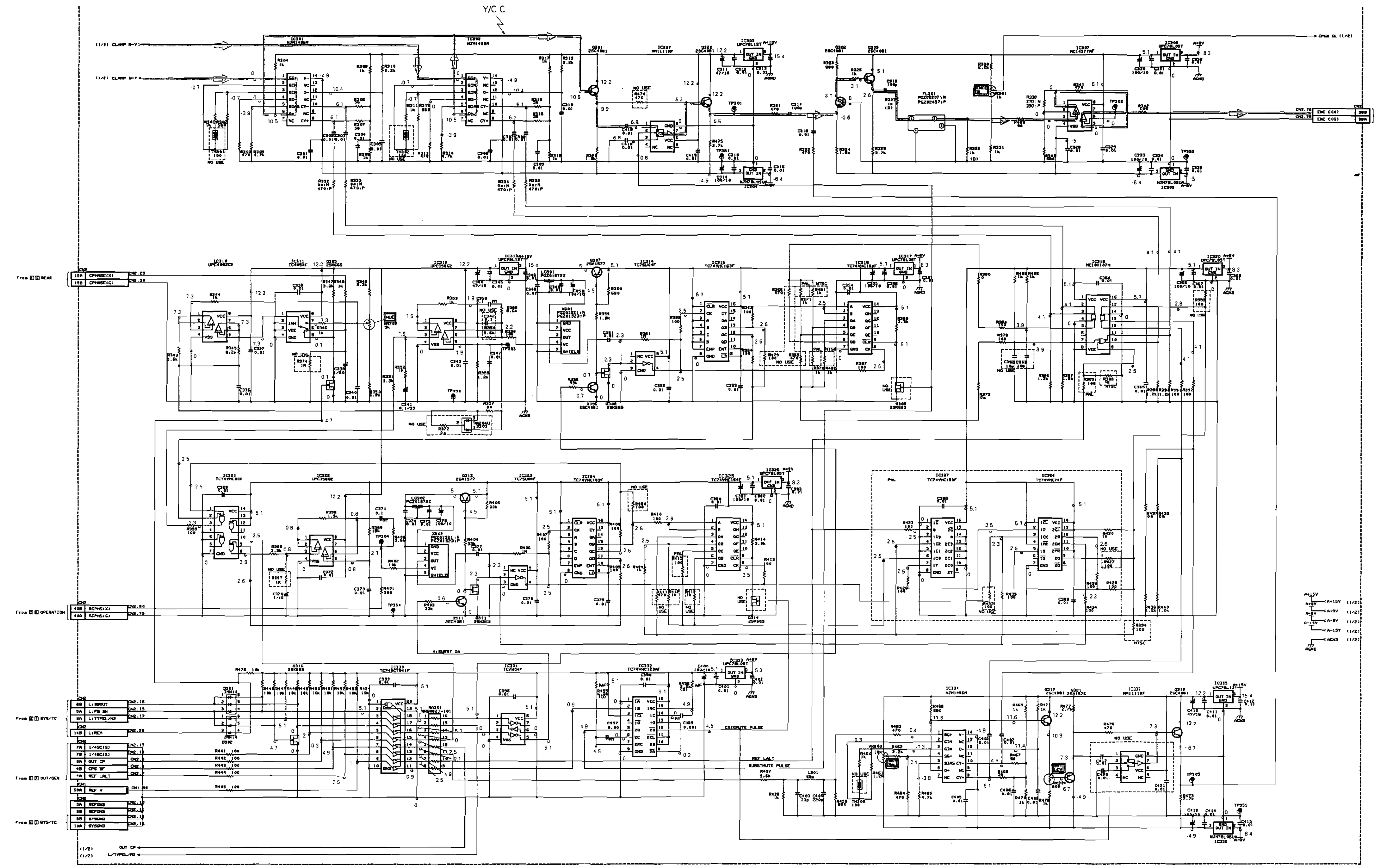




V IE-V20471 / Druck 55

## 4.36 OUT ENC CIRCUIT BOARD

— SIDE A —

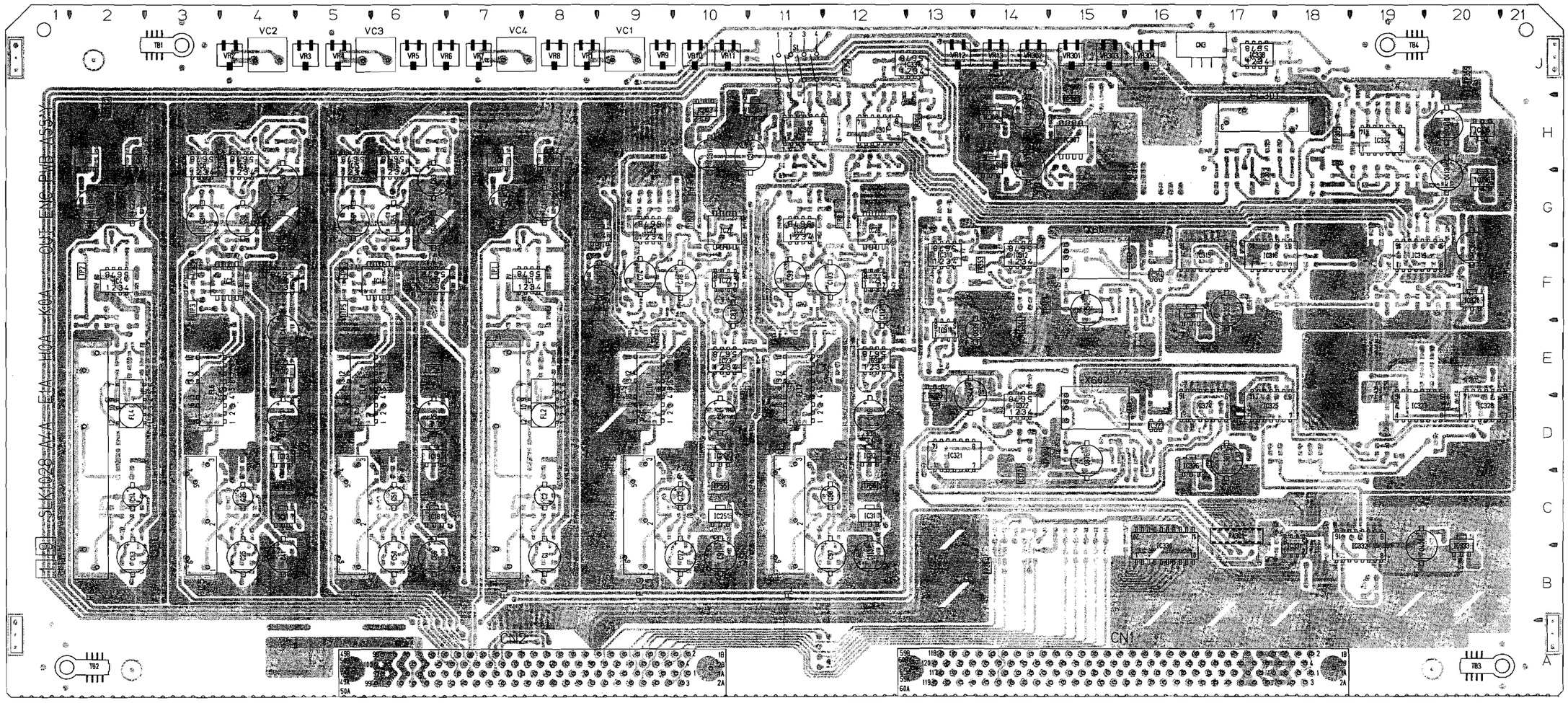


## ● ADDRESS TABLE OF BOARD PARTS

Each address may have an address error by one interval.

Side — A-1C — Y axis / X axis

| | | | | | | | | | | | | | | | | | | | | | | | | | | | | | | | | | | | |
|---|---|---|---|---|---|---|---|---|---|---|---|---|---|---|---|---|---|---|---|---|---|---|---|---|---|---|---|---|---|---|---|---|---|---|---|
| IC1 | A- 7F | IC28 | A- 12G | IC326 | A- 16D | Q15 | B- 6C | Q307 | B- 15F | R11 | B- 7F | R38 | B- 3F | R65 | B- 5F | R92 | B- 9F | R120 | B- 12F | R150 | B- 6F | R197 | B- 10G | R311 | B- 11H | R342 | B- 15H | R369 | B- 14F | R403 | B- 16C | R441 | B- 15B | R468 | B- 19H | VR8 | A- 8J | C17 | B- 2F |
| IC2 | A- 7H | IC29 | A- 12F | IC327 | A- 19E | Q16 | B- 6H | Q308 | B- 16F | R12 | B- 8G | R39 | B- 3F | R66 | B- 5F | R93 | B- 9F | R121 | B- 11G | R151 | B- 9C | R198 | B- 12G | R312 | B- 11H | R343 | B- 13F | R370 | B- 18F | R404 | B- 15C | R442 | B- 15B | R469 | B- 19H | VR9 | A- 9J | C18 | B- 2F |
| IC3 | A- 8H | IC30 | A- 12E | IC328 | A- 20E | Q17 | B- 9B | Q309 | B- 18G | R13 | B- 8G | R40 | B- 3G | R67 | B- 5G | R94 | B- 9G | R122 | B- 11F | R152 | B- 9F | R199 | B- 15J | R313 | B- 11H | R344 | B- 13F | R371 | B- 18G | R405 | B- 15C | R443 | B- 15B | R470 | B- 19H | VR10 | A- 10J | C19 | A- 2G |
| IC4 | A- 2F | IC31 | A- 12C | IC330 | A- 16B | Q18 | B- 10B | Q311 | B- 16D | R14 | B- 7G | R41 | B- 4G | R68 | B- 6G | R95 | B- 9G | R123 | B- 11F | R153 | B- 11C | R200 | B- 11J | R314 | B- 12H | R345 | B- 13G | R372 | B- 13G | R406 | B- 15E | R444 | B- 15B | R471 | B- 19H | VR11 | A- 10J | C20 | B- 2G |
| IC5 | A- 2H | IC32 | A- 12D | IC331 | A- 18B | Q19 | B- 9F | Q312 | B- 15C | R15 | B- 2B | R42 | B- 3G | R69 | B- 6G | R96 | B- 9G | R124 | B- 11G | R154 | B- 11F | R201 | B- 11J | R315 | B- 11J | R346 | B- 13F | R373 | B- 19F | R407 | B- 16E | R445 | B- 15B | R472 | B- 16J | VR12 | A- 13J | C21 | B- 2H |
| IC6 | A- 2H | IC301 | A- 12H | IC332 | A- 18B | Q20 | B- 10F | Q313 | B- 16C | R16 | B- 2B | R43 | B- 4G | R70 | B- 6G | R97 | B- 9G | R125 | B- 11G | R155 | B- 8E | R202 | B- 10E | R316 | B- 11J | R347 | B- 13F | R374 | B- 13F | R408 | B- 17E | R446 | B- 14B | R473 | B- 18H | VR13 | A- 14J | C22 | A- 2G |
| IC7 | A- 3F | IC302 | A- 11H | IC333 | A- 20B | Q21 | B- 10F | Q314 | B- 18E | R17 | B- 2B | R44 | B- 3G | R71 | B- 5G | R98 | B- 9G | R126 | B- 11G | R156 | B- 8E | R203 | B- 12E | R317 | B- 11J | R348 | B- 13E | R376 | B- 19F | R409 | B- 17E | R447 | B- 14B | R474 | B- 13H | VR301 | A- 15J | C23 | B- 2G |
| IC8 | A- 3H | IC303 | A- 10H | IC334 | A- 19H | Q22 | B- 11B | Q316 | B- 14B | R18 | B- 2C | R45 | B- 3G | R72 | B- 5G | R99 | B- 10F | R129 | B- 12F | R157 | B- 8E | R204 | B- 7C | R318 | B- 12J | R349 | B- 13G | R380 | B- 18G | R410 | B- 17E | R448 | B- 15B | R475 | B- 13H | VR302 | A- 14J | C24 | B- 2H |
| IC9 | A- 4H | IC304 | A- 11H | IC335 | A- 20H | Q23 | B- 12B | Q317 | B- 20H | R19 | B- 2C | R46 | B- 3G | R73 | B- 5G | R101 | B- 10F | R131 | B- 12F | R158 | B- 8E | R205 | B- 2C | R319 | B- 11J | R350 | B- 13G | R384 | B- 20F | R411 | B- 18C | R449 | B- 14B | R476 | B- 15B | VR303 | A- 15J | C25 | A- 4B |
| IC10 | A- 4F | IC307 | A- 15H | IC336 | A- 20G | Q24 | B- 11F | Q318 | B- 19H | R20 | B- 2C | R47 | B- 3H | R74 | B- 5H | R102 | B- 10G | R132 | B- 12G | R159 | B- 8E | R206 | B- 3C | R320 | B- 13H | R351 | B- 14F | R385 | B- 19F | R412 | B- 18C | R450 | B- 15B | R477 | B- 18J | VR304 | A- 16J | C26 | A- 4C |
| IC11 | A- 4C | IC308 | A- 14H | IC337 | A- 13J | Q25 | B- 12F | Q320 | B- 13H | R21 | B- 2C | R48 | B- 4G | R75 | B- 6G | R103 | B- 10F | R133 | B- 12F | R160 | B- 7E | R207 | B- 6C | R321 | B- 17G | R352 | B- 14F | R386 | B- 20G | R413 | B- 18E | R451 | B- 15B | R478 | B- 18J | | | C27 | B- 3F |
| IC12 | A- 4E | IC309 | A- 14H | IC338 | A- 17J | Q26 | B- 12F | Q321 | B- 18J | R22 | B- 2C | R49 | B- 4H | R76 | B- 6H | R104 | B- 10G | R134 | B- 12G | R161 | B- 2E | R208 | B- 10C | R322 | B- 17G | R353 | B- 14F | R387 | B- 20G | R414 | B- 18E | R452 | B- 15B | R479 | B- 17F | C1 | A- 8B | C28 | B- 4F |
| IC13 | A- 4D | IC310 | A- 13G | | | Q27 | B- 8E | | | R23 | B- 2F | R50 | B- 4H | R77 | B- 6H | R105 | B- 10G | R135 | B- 12G | R162 | B- 2E | R209 | B- 12C | R323 | B- 17G | R354 | B- 14F | R388 | B- 20F | R415 | B- 18C | R453 | B- 15B | R480 | B- 17E | C2 | A- 8C | C29 | B- 3G |
| IC14 | A- 5F | IC311 | A- 13F | Q1 | B- 8B | Q28 | B- 8E | D301 | B- 14B | R24 | B- 2F | R51 | B- 4H | R78 | B- 6H | R106 | B- 10F | R136 | B- 12F | R163 | B- 2E | R210 | B- 9F | R324 | B- 18H | R355 | B- 14G | R389 | B- 20G | R416 | B- 18C | R454 | B- 15B | R481 | B- 18G | C3 | B- 7F | C30 | A- 4G |
| IC15 | A- 5H | IC312 | A- 14G | Q2 | B- 8B | Q29 | B- 2E | D302 | B- 14B | R25 | B- 1F | R52 | B- 4H | R79 | B- 6H | R107 | B- 10G | R137 | B- 12G | R164 | B- 2E | R211 | B- 9F | R325 | B- 17G | R356 | B- 14F | R390 | B- 20G | R423 | B- 19C | R455 | B- 19B | R482 | B- 18F | C4 | B- 7F | C31 | A- 3G |
| IC16 | A- 6H | IC313 | A- 13E | Q3 | B- 8C | Q30 | B- 2E | D303 | B- 14G | R26 | B- 2G | R53 | B- 4H | R80 | B- 6H | R108 | B- 10E | R138 | B- 12E | R165 | B- 2E | R212 | B- 11F | R326 | B- 18H | R357 | B- 13G | R391 | B- 20G | R426 | B- 20C | R456 | B- 19B | R483 | B- 17H | C5 | B- 8F | C32 | B- 3H |
| IC17 | A- 6F | IC314 | A- 16F | Q4 | B- 7G | Q39 | B- 9F | | | R27 | B- 2G | R54 | B- 4H | R81 | B- 6H | R109 | B- 10F | R139 | B- 12F | R166 | B- 2E | R213 | B- 11F | R327 | B- 18H | R358 | B- 16F | R392 | B- 20G | R427 | B- 21E | R457 | B- 18G | R484 | B- 18C | C6 | B- 7F | C33 | B- 3G |
| IC18 | A- 6C | IC315 | A- 16G | Q5 | B- 2B | Q40 | B- 11F | R1 | B- 8B | R28 | B- 2G | R55 | B- 4H | R82 | B- 6H | R110 | B- 11F | R140 | B- 12F | R169 | B- 3E | R301 | B- 12H | R328 | B- 17G | R359 | B- 15F | R393 | B- 19G | R428 | B- 21E | R458 | B- 18H | R485 | B- 20F | C7 | A- 7G | C34 | B- 3H |
| IC19 | A- 6D | IC316 | A- 17G | Q6 | B- 2B | Q41 | B- 9F | R2 | B- 8B | R29 | B- 4B | R56 | B- 6B | R83 | B- 10B | R111 | B- 11F | R141 | B- 13F | R175 | B- 5E | R302 | B- 12H | R330 | B- 15H | R360 | B- 15F | R394 | B- 19G | R429 | B- 20E | R459 | B- 19G | R486 | B- 20F | C8 | B- 7G | C35 | B- 4H |
| IC20 | A- 9G | IC317 | A- 16F | Q7 | B- 2C | Q42 | B- 9F | R3 | B- 8B | R30 | B- 4B | R57 | B- 6B | R84 | B- 10B | R112 | B- 10F | R142 | B- 12F | R181 | B- 9E | R303 | B- 12H | R331 | B- 15H | R361 | B- 15G | R395 | B- 13C | R430 | B- 19E | R460 | B- 19G | | | C9 | B- 7H | C36 | B- 4G |
| IC21 | A- 10G | IC319 | A- 19G | Q8 | B- 2G | Q43 | B- 11F | R4 | B- 8C | R31 | B- 4B | R58 | B- 6B | R85 | B- 9B | R113 | B- 12B | R143 | B- 8C | R185 | B- 11E | R304 | B- 12J | R332 | B- 12H | R362 | B- 16F | R396 | B- 14C | R433 | B- 19C | R461 | B- 19G | VR1 | A- 8J | C10 | A- 8G | C37 | B- 4H |
| IC22 | A- 10F | IC320 | A- 20F | Q9 | B- 4B | Q44 | B- 11F | R5 | B- 8C | R32 | B- 4C | R59 | B- 6C | R86 | B- 10C | R114 | B- 12B | R144 | B- 8C | R188 | B- 11E | R305 | B- 13H | R333 | B- 12H | R363 | B- 17F | R397 | B- 14C | R434 | B- 19C | R462 | B- 19G | VR2 | A- 3J | C11 | B- 8G | C38 | A- 4G |
| IC23 | A- 10E | IC321 | A- 13D | Q10 | B- 4B | Q301 | B- 13H | R6 | B- 8C | R33 | B- 4C | R60 | B- 6C | R87 | B- 10C | R115 | B- 11B | R145 | B- 2C | R306 | B- 12J | R334 | B- 12H | R364 | B- 17F | R398 | B- 14E | R435 | B- 19C | R463 | B- 19G | VR3 | A- 4J | C12 | B- 8H | C39 | A- 4G |
| IC24 | A- 8G | IC322 | A- 14E | Q11 | B- 4C | Q302 | B- 17H | R7 | B- 8C | R34 | B- 4C | R61 | B- 6C | R88 | B- 9C | R116 | B- 12C | R146 | B- 2C | R193 | B- 8F | R307 | B- 12J | R335 | B- 11H | R365 | B- 18F | R399 | B- 14E | R437 | B- 20E | R464 | B- 19G | VR4 | A- 5J | C13 | A- 2B | C40 | B- 4F |
| IC25 | A- 10C | IC323 | A- 16E | Q12 | B- 4H | Q303 | B- 18G | R8 | B- 8C | R35 | B- 4C | R62 | B- 6C | R89 | B- 10F | R117 | B- 12C | R147 | B- 3C | R194 | B- 2F | R308 | B- 12J | R338 | B- 15G | R366 | B- 18G | R400 | B- 14E | R438 | B- 20E | R465 | B- 20G | VR5 | A- 6J | C14 | A- 2C | C41 | A- 4B |
| IC26 | A- 10D | IC324 | A- 16E | Q13 | B- 6B | Q305 | B- 13E | R9 | B- 8F | R36 | B- 4C | R63 | B- 6C | R90 | B- 10F | R118 | B- 11C | R148 | B- 4F | R195 | B- 3F | R309 | B- 13J | R340 | B- 15G | R367 | B- 18G | R401 | B- 14E | R439 | B- 20E | R466 | B- 20H | VR6 | A- 6J | C15 | B- 2F | C42 | B- 4B |
| IC27 | A- 11G | IC325 | A- 17E | Q14 | B- 6B | Q306 | B- 16F | R10 | B- 7F | R37 | B- 4F | R64 | B- 6F | R91 | B- 9G | R119 | B- 12F | R149 | B- 5C | R196 | B- 5F | R310 | B- 12J | R341 | B- 15G | R368 | B- 18G | R402 | B- 14E | R440 | B- 20E | R467 | B- 19H | VR7 | A- 7J | C16 | B- 2F | C43 | B- 4C |


4-76

— SIDE B —

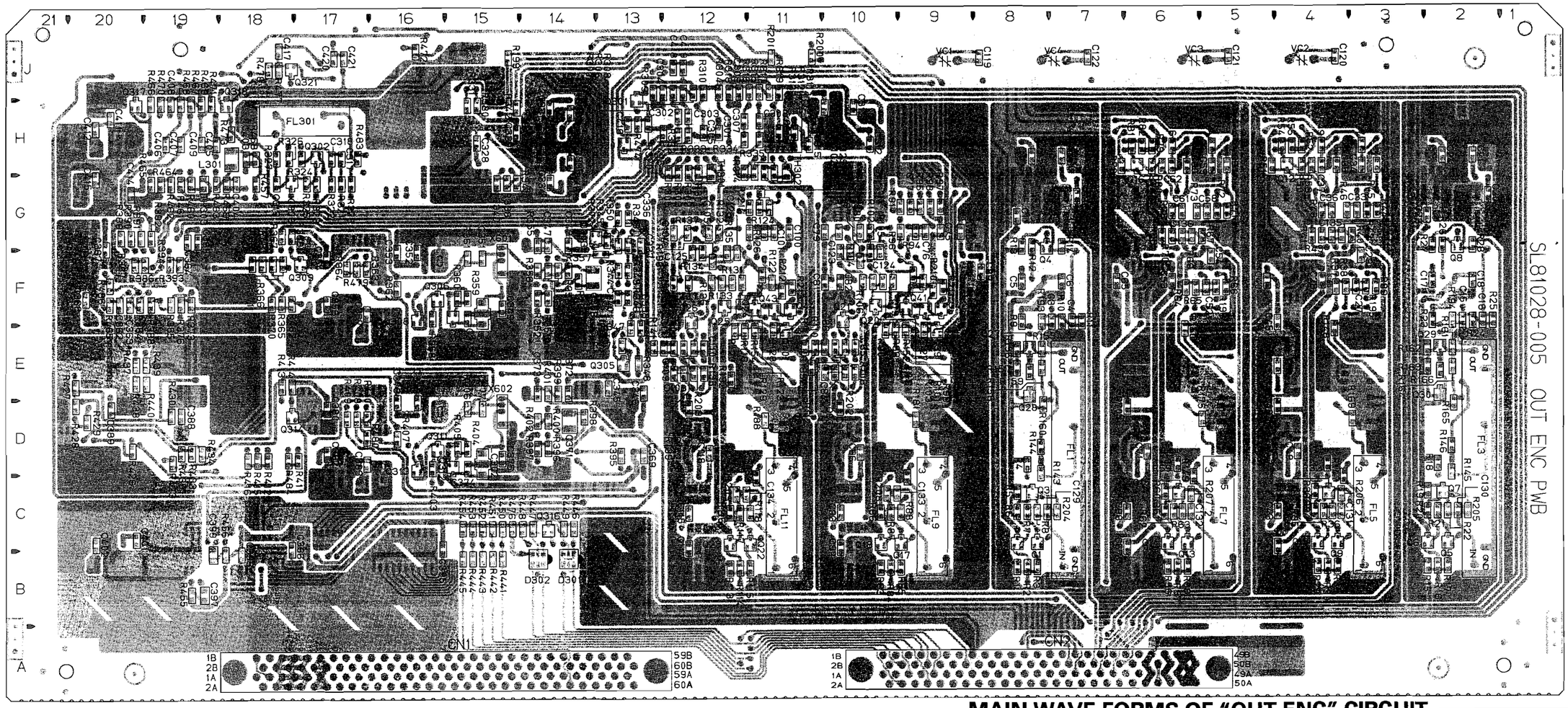


| | | | | | | | | | | | | | | | | | | | |
|---|---|---|---|---|---|---|---|---|---|---|---|---|---|---|---|---|---|---|---|
| C44 | A- 4F | C71 | B- 6C | C98 | A- 12C | C125 | B- 12G | C316 | B- 10H | C351 | B- 15G | C381 | A- 17C | C417 | B- 18J | TP301 | A- 13H | FL1 | A- 7B |
| C45 | B- 4F | C72 | A- 10B | C99 | A- 11F | C126 | B- 12G | C317 | B- 17H | C352 | B- 16G | C382 | B- 17C | C418 | B- 12J | TP302 | A- 15H | FL2 | A- 8E |
| C46 | B- 4E | C73 | A- 10C | C100 | B- 11G | C127 | B- 9F | C318 | B- 17H | C353 | B- 16G | C383 | B- 17C | C419 | B- 12J | TP303 | A- 15F | FL3 | A- 2B |
| C47 | A- 4E | C74 | A- 9F | C101 | B- 11G | C128 | B- 11F | C319 | B- 18G | C354 | B- 17G | C388 | B- 19E | C420 | B- 17J | TP304 | A- 15C | FL4 | A- 2E |
| C48 | B- 4E | C75 | B- 9G | C102 | B- 11G | C129 | B- 7C | C328 | B- 15H | C355 | A- 17F | C389 | B- 20E | C421 | B- 17J | TP305 | A- 18H | FL5 | A- 3B |
| C49 | B- 4C | C76 | B- 9G | C103 | A- 12F | C130 | B- 2C | C329 | B- 15H | C356 | B- 17F | C395 | B- 16B | | | TP351 | A- 12J | FL6 | A- 3E |
| C50 | A- 6B | C77 | B- 9G | C104 | B- 12G | C131 | B- 3C | C330 | A- 14H | C357 | B- 17F | C396 | B- 18B | VC1 | A- 9J | TP352 | A- 17G | FL7 | A- 5B |
| C51 | A- 6C | C78 | A- 10F | C105 | B- 12G | C132 | B- 6C | C331 | B- 14H | C358 | B- 14F | C397 | B- 19B | VC2 | A- 4J | TP353 | A- 14F | FL8 | A- 5E |
| C52 | B- 5F | C79 | B- 10G | C106 | B- 12F | C133 | B- 9C | C332 | B- 14H | C362 | B- 20F | C398 | B- 18B | VC3 | A- 5J | TP354 | A- 14B | FL9 | A- 9B |
| C53 | B- 6F | C80 | B- 10G | C107 | B- 12F | C134 | B- 11C | C333 | A- 14H | C363 | B- 20F | C399 | B- 19B | VC4 | A- 7J | TP355 | A- 20J | FL10 | A- 9E |
| C54 | B- 5G | C81 | B- 10F | C108 | B- 12E | C135 | B- 4G | C334 | B- 14G | C364 | B- 19G | C400 | A- 20B | | | | | FL11 | A- 11B |
| C55 | A- 6G | C82 | B- 10F | C109 | B- 12E | C136 | B- 6G | C335 | B- 14H | C365 | B- 19G | C401 | B- 20B | L301 | B- 18H | LC301 | B- 15F | FL12 | A- 11E |
| C56 | A- 5G | C83 | B- 10E | C110 | B- 12F | C301 | B- 12H | C336 | B- 13G | C366 | A- 20G | C402 | B- 20B | | | LC302 | B- 15C | FL301 | A- 18H |
| C57 | B- 5H | C84 | B- 10E | C111 | B- 13F | C302 | B- 12H | C337 | B- 13G | C367 | B- 20G | C403 | B- 18H | TP1 | A- 7F | | | | |
| C58 | B- 5G | C85 | B- 10F | C112 | A- 12F | C303 | B- 12H | C338 | B- 13F | C368 | B- 20F | C404 | B- 18G | TP2 | A- 2F | RA301 | A- 17B | X601 | A- 15F |
| C59 | B- 5H | C86 | B- 10F | C113 | A- 12B | C304 | B- 13J | C339 | A- 14F | C369 | B- 13C | C405 | B- 19H | TP3 | A- 3F | | | X602 | A- 15E |
| C60 | B- 6H | C87 | A- 10F | C114 | B- 12B | C305 | B- 12H | C340 | B- 13F | C370 | A- 14C | C406 | B- 19H | TP4 | A- 3F | S1 | A- 11J | | |
| C61 | B- 6G | C88 | A- 8F | C115 | B- 12C | C306 | B- 11H | C341 | A- 14F | C371 | B- 14E | C407 | B- 19H | TP5 | A- 5F | | | CN1 | A- 16A |
| C62 | B- 6H | C89 | B- 8F | C116 | A- 12E | C307 | B- 12H | C342 | B- 14F | C372 | B- 14E | C408 | B- 19H | TP6 | A- 5F | TB1 | A- 3J | CN2 | A- 8A |
| C63 | A- 6G | C90 | B- 9G | C117 | B- 12E | C308 | B- 11H | C343 | B- 14G | C373 | B- 14E | C409 | B- 19H | TP7 | A- 10G | TB2 | A- 1A | CN3 | A- 17J |
| C64 | A- 6G | C91 | A- 10B | C118 | B- 12C | C309 | B- 12J | C344 | A- 14E | C374 | B- 15C | C410 | A- 20H | TP8 | A- 12G | TB3 | A- 21A | | |
| C65 | B- 7F | C92 | B- 10B | C119 | B- 8J | C310 | B- 11H | C345 | B- 13E | C375 | B- 15C | C411 | B- 20H | TP51 | A- 7G | TB4 | A- 19J | | |
| C66 | A- 6B | C93 | B- 10C | C120 | B- 4J | C311 | A- 10H | C346 | B- 13E | C376 | A- 15C | C412 | B- 20H | TP52 | A- 2H | | | | |
| C67 | B- 6B | C94 | A- 10E | C121 | B- 5J | C312 | B- 10H | C347 | B- 14G | C377 | B- 15E | C413 | A- 20H | TP53 | A- 4C | TH301 | B- 12H | | |
| C68 | B- 6C | C95 | B- 10E | C122 | B- 7J | C313 | B- 10H | C348 | B- 15F | C378 | B- 16E | C414 | B- 20G | TP54 | A- 6E | TH302 | B- 11H | | |
| C69 | A- 6E | C96 | B- 10C | C123 | B- 10G | C314 | A- 11H | C349 | B- 15F | C379 | B- 16E | C415 | B- 20H | TP55 | A- 10C | TH303 | B- 19G | | |
| C70 | B- 6E | C97 | A- 12B | C124 | B- 10G | C315 | B- 11H | C350 | A- 15F | C380 | B- 17E | C416 | B- 13H | TP56 | A- 12C | | | | |



## MAIN WAVE FORMS OF "OUT ENC" CIRCUIT

### [NTSC]

| TP1 | TP3,TP4 | TP5,TP6 | TP7 | TP8 | TP301,TP305 |
|---|---|---|---|---|---|
| 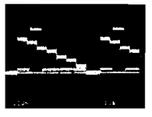 | | | | 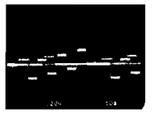 | 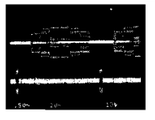 |
| [REC]<br>0.69Vp-p | [REC]<br>TP3: 0.32Vp-p<br>TP4: 0.46Vp-p | [REC]<br>TP3: 0.3Vp-p<br>TP4: 0.46Vp-p | [REC]<br>0.65Vp-p | [REC]<br>0.45Vp-p | TP301: Color<br>TP305: Burst |

### [PAL]

| TP1 | TP3,TP4 | TP5 | TP7 | TP8 | TP301 | TP302 |
|---|---|---|---|---|---|---|
| 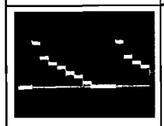 | 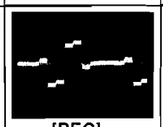 | 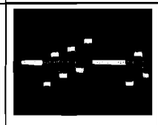 | | 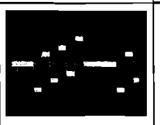 | 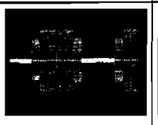 | 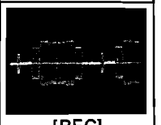 |
| [REC]<br>0.7Vp-p | [REC]<br>0.35Vp-p: TP3<br>0.52Vp-p: TP4 | [REC]<br>0.35Vp-p | [REC]<br>0.6Vp-p | [REC]<br>0.4Vp-p | [REC]<br>1Vp-p | [REC]<br>0.84Vp-p<br>(0.4V: Burst level) |

4-77

## 4.37 ANA AUDIO CIRCUIT BOARD

— SIDE A —

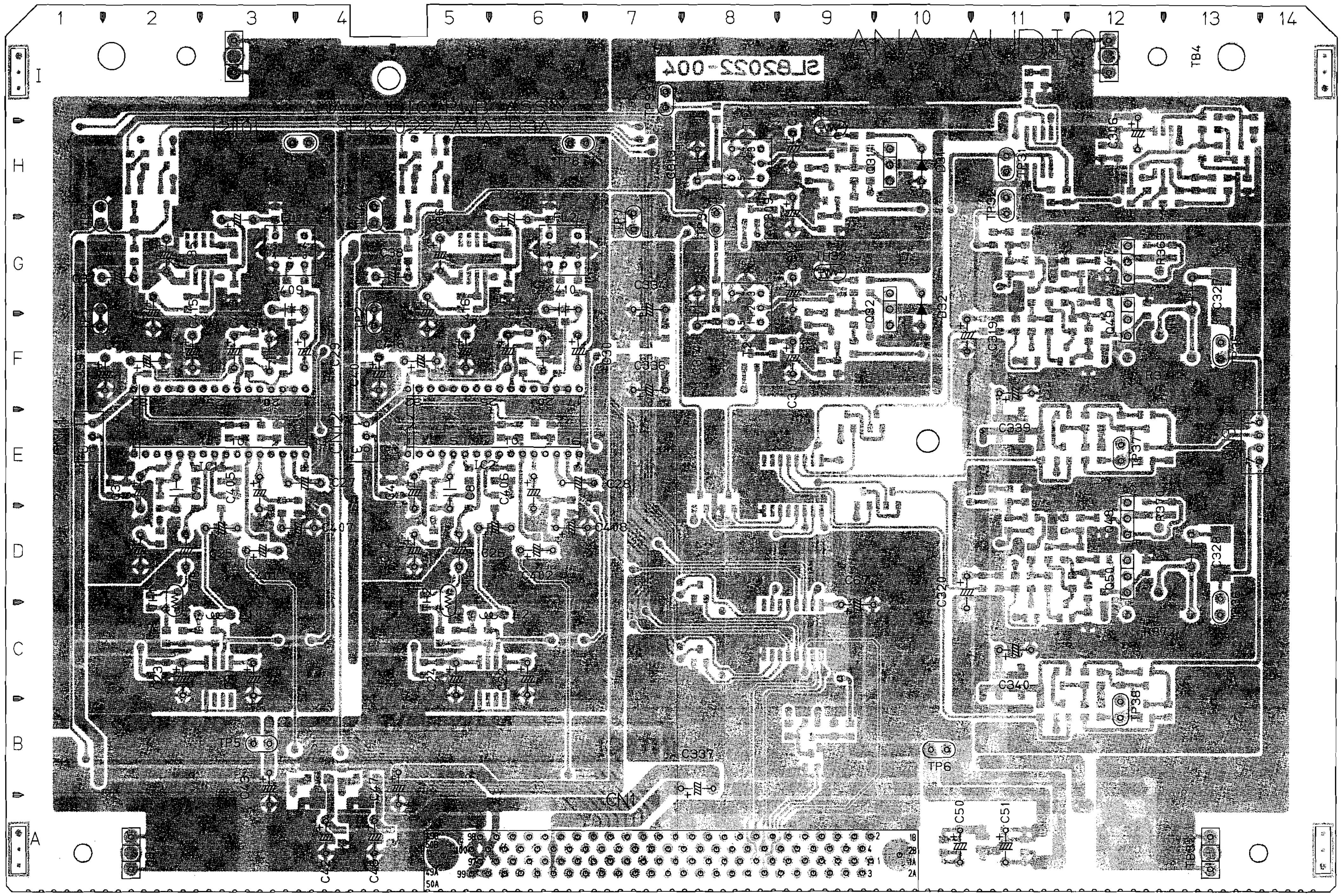


● **ADDRESS TABLE OF BOARD PARTS**

A-1C: Side — A; 1 — X axis; C — Y axis

Each address may have an address error by one interval.

| | | | | | | | | | |
|---|---|---|---|---|---|---|---|---|---|
| IC1 | A-2E | Q1 | B-9C | Q18 | B-5H | Q41 | B-12F | Q54 | B-12C |
| IC2 | A-5E | Q2 | B-9C | Q19 | B-2H | Q42 | B-12D | Q55 | B-12F |
| IC3 | B-3C | Q3 | B-8D | Q20 | B-5H | Q43 | B-12G | Q56 | B-12C |
| IC4 | B-6C | Q6 | B-8D | Q31 | A-10H | Q44 | B-12E | Q57 | B-12E |
| IC5 | B-3G | Q7 | B-8E | Q32 | A-10G | Q45 | B-12G | Q58 | B-12C |
| IC6 | B-6G | Q8 | B-8E | Q33 | B-9H | Q46 | B-12D | Q59 | B-8H |
| IC7 | B-9D | Q9 | B-9F | Q34 | B-9G | Q47 | A-12G | Q60 | B-8F |
| IC8 | B-9E | Q10 | B-10F | Q35 | B-9H | Q48 | A-12E | | |
| IC9 | B-4B | Q11 | B-9E | Q36 | B-9F | Q49 | A-12G | D31 | A-10H |
| IC10 | B-4B | Q12 | B-10E | Q37 | B-11F | Q50 | A-12D | D32 | A-10G |
| IC31 | B-13H | Q15 | B-2H | Q38 | B-11D | Q51 | B-12E | D33 | B-13H |
| IC32 | B-11H | Q16 | B-5H | Q39 | B-11G | Q52 | B-12C | | |
| | | Q17 | B-2H | Q40 | B-11E | Q53 | B-12F | R1 | B-2E |

| | | | | | | | | | |
|---|---|---|---|---|---|---|---|---|---|
| R2 | B-4E | R15 | B-2C | R28 | B-6G | R55 | B-7E | R311 | B-11H |
| R3 | B-2E | R16 | B-5C | R29 | B-3G | R65 | B-6E | R312 | B-12H |
| R4 | B-5E | R17 | B-3D | R30 | B-6G | R72 | B-6E | R313 | B-11I |
| R5 | B-2E | R18 | B-6D | R31 | B-2G | R301 | B-13H | R314 | B-11I |
| R6 | B-5E | R19 | B-4G | R32 | B-5G | R302 | B-12H | R315 | B-10H |
| R7 | B-2E | R20 | B-7G | R33 | B-9C | R303 | B-12H | R316 | B-10G |
| R8 | B-5E | R21 | B-3H | R34 | B-9C | R304 | B-12H | R317 | B-9H |
| R9 | B-2D | R22 | B-6H | R35 | B-9C | R305 | B-12H | R318 | B-9F |
| R10 | B-5D | R23 | B-3G | R36 | B-3E | R306 | B-13H | R319 | B-10H |
| R11 | B-2D | R24 | B-5G | R37 | B-2H | R307 | B-13H | R320 | B-10G |
| R12 | B-5D | R25 | B-2G | R38 | B-5H | R308 | B-13H | R321 | B-9H |
| R13 | B-2C | R26 | B-5G | R43 | B-3E | R309 | B-14H | R322 | B-9G |
| R14 | B-5C | R27 | B-3G | R47 | B-4E | R310 | B-14H | R323 | B-9H |

| | | | | | | | | | |
|---|---|---|---|---|---|---|---|---|---|
| R324 | B-9G | R337 | B-11G | R350 | B-11D | R363 | B-13G | R376 | B-12C |
| R325 | B-9H | R338 | B-11D | R351 | B-12G | R364 | B-13E | R377 | B-12F |
| R326 | B-9F | R339 | B-11G | R352 | B-12D | R365 | B-12G | R378 | B-12C |
| R327 | B-9H | R340 | B-11E | R353 | B-12F | R366 | B-12E | R379 | B-12E |
| R328 | B-9F | R341 | B-11G | R354 | B-12D | R367 | B-12F | R380 | B-12C |
| R329 | B-9H | R342 | B-11E | R355 | B-12F | R368 | B-12D | R381 | B-12F |
| R330 | B-9F | R343 | B-11G | R356 | B-12D | R369 | A-13F | R382 | B-12C |
| R331 | B-8I | R344 | B-11E | R357 | B-12G | R370 | A-13D | R383 | B-11E |
| R332 | B-8G | R345 | B-11G | R358 | B-12E | R371 | A-12F | R384 | B-11C |
| R333 | B-11G | R346 | B-11E | R359 | B-12G | R372 | A-12D | R385 | B-13H |
| R334 | B-11D | R347 | B-11G | R360 | B-12E | R373 | B-13G | R401 | B-3E |
| R335 | B-11G | R348 | B-11D | R361 | B-12G | R374 | B-13E | R402 | B-6E |
| R336 | B-11D | R349 | B-11G | R362 | B-12E | R375 | B-12E | R403 | B-3F |

| | | | | | | | | | |
|---|---|---|---|---|---|---|---|---|---|
| R404 | B-6F | R417 | B-3F | C7 | A-2E | C20 | B-5D | C33 | A-2G |
| R405 | B-4E | R418 | B-6F | C8 | A-5E | C21 | A-3D | C34 | A-5G |
| R406 | B-6E | R419 | B-3F | C9 | B-2E | C22 | A-6D | C35 | A-2G |
| R407 | B-3E | R420 | B-6F | C10 | B-5E | C23 | A-2D | C36 | A-5G |
| R408 | B-6E | R421 | B-2F | C11 | A-2E | C24 | A-5D | C37 | A-2G |
| R409 | B-3F | R422 | B-5F | C12 | A-5E | C25 | A-3E | C38 | A-4G |
| R410 | B-6F | | | C13 | B-2H | C26 | A-5E | C39 | A-2F |
| R411 | B-3F | C1 | B-2E | C14 | B-5H | C27 | A-3E | C40 | A-4F |
| R412 | B-6F | C2 | B-5E | C15 | A-2D | C28 | A-6E | C41 | B-4B |
| R413 | B-3G | C3 | A-2E | C16 | A-5D | C29 | A-4F | C42 | A-4B |
| R414 | B-6G | C4 | A-5E | C17 | B-2D | C30 | A-7F | C43 | A-3C |
| R415 | B-3F | C5 | B-2E | C18 | B-5D | C31 | A-3H | C44 | B-3C |
| R416 | B-6F | C6 | B-5E | C19 | B-3D | C32 | A-6H | C45 | B-4B |

— SIDE B —

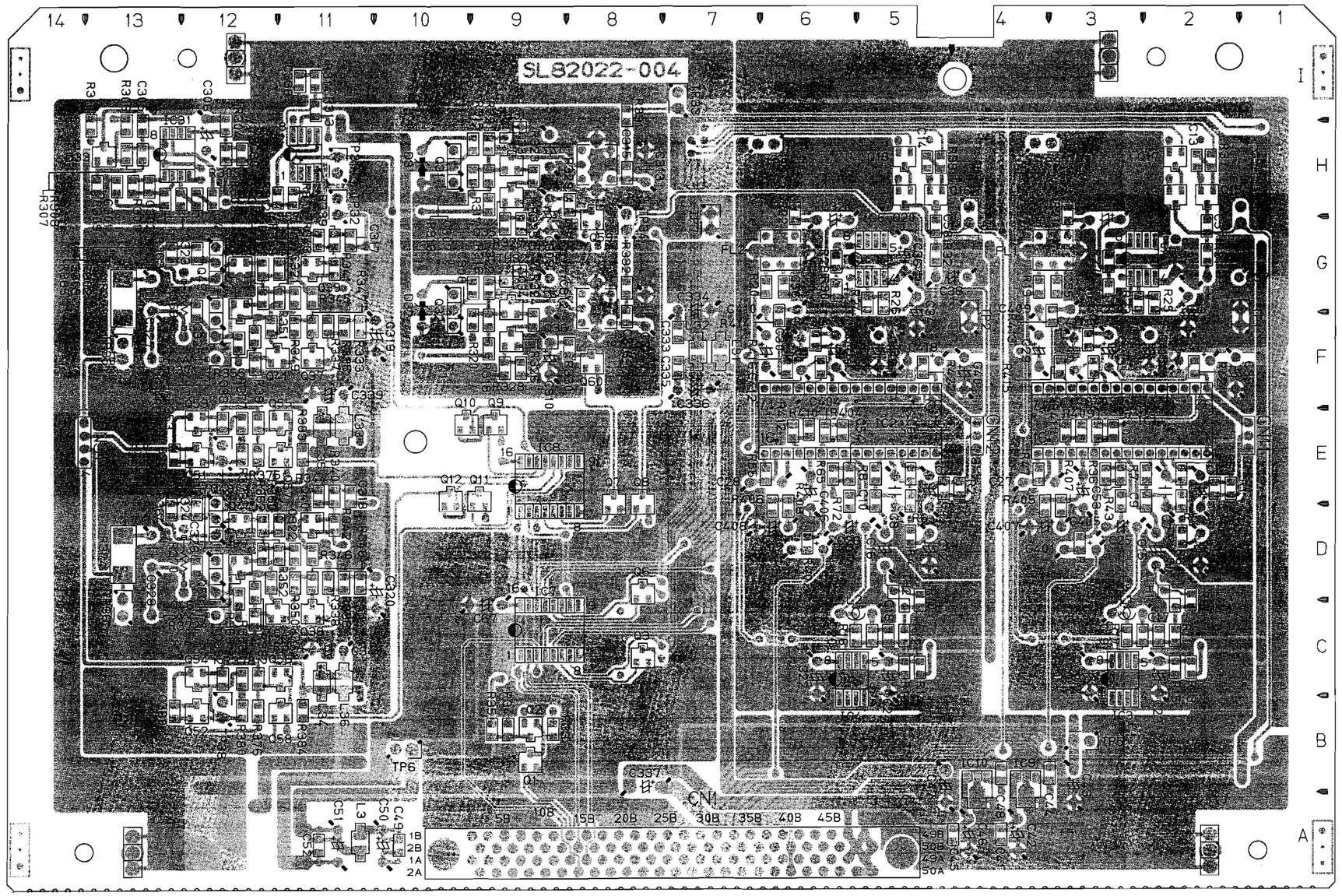


| | | | | | | | | | | | | | | | | | | | |
|---|---|---|---|---|---|---|---|---|---|---|---|---|---|---|---|---|---|---|---|
| C46 | A- 4B | C67 | A- 9D | C313 | A- 8H | C326 | B- 12D | C339 | A- 11F | C412 | A- 6F | L33 | B- 11F | TP9 | A- 3H | T1 | A- 8H | CN1 | A- 7A |
| C47 | A- 5C | C301 | B- 13H | C314 | A- 8G | C327 | A- 13G | C340 | A- 11D | C413 | A- 3F | L34 | B- 11C | TP31 | A- 11H | T2 | A- 8G | CN11 | A- 1F |
| C48 | B- 4C | C302 | B- 13H | C315 | B- 8H | C328 | A- 13D | C401 | A- 3E | C414 | A- 6F | L35 | B- 11F | TP32 | A- 11H | | | CN12 | A- 4F |
| C49 | B- 10B | C303 | B- 13H | C316 | B- 8G | C329 | B- 13E | C402 | A- 6E | C415 | A- 2F | L36 | B- 11C | TP33 | A- 7I | TB1 | A- 2I | CN31 | A- 14F |
| C50 | A- 11B | C304 | B- 12H | C317 | B- 11G | C330 | B- 13C | C403 | B- 3F | C416 | A- 5F | | | TP34 | A- 8H | TB2 | A- 1B | | |
| C51 | A- 11B | C305 | B- 13H | C318 | B- 11E | C331 | B- 12F | C404 | B- 6F | C417 | A- 2F | TP1 | A- 1G | TP35 | A- 13F | TB3 | A- 14B | | |
| C52 | B- 11B | C306 | A- 12H | C319 | A- 11G | C332 | B- 12C | C405 | A- 3E | C418 | A- 5F | TP2 | A- 4G | TP36 | A- 13D | TB4 | A- 13I | | |
| C53 | B- 3E | C307 | B- 9H | C320 | A- 11D | C333 | B- 7G | C406 | A- 6E | | | TP3 | A- 1H | TP37 | A- 12E | | | | |
| C54 | B- 6E | C308 | B- 9G | C321 | B- 11G | C334 | A- 7G | C407 | A- 3E | L1 | A- 3D | TP4 | A- 4H | TP38 | A- 12C | TH1 | A- 2D | | |
| C55 | B- 3G | C309 | A- 9H | C322 | B- 11E | C335 | B- 7F | C408 | A- 6E | L2 | A- 6D | TP5 | A- 3C | | | TH2 | A- 5D | | |
| C56 | B- 6G | C310 | A- 9F | C323 | B- 12G | C336 | A- 7F | C409 | A- 4G | L3 | B- 11B | TP6 | A- 10C | FL1 | A- 3G | TH31 | A- 9H | | |
| C57 | B- 2G | C311 | A- 9H | C324 | B- 12E | C337 | A- 8B | C410 | A- 7G | L31 | B- 7F | TP7 | A- 7H | FL2 | A- 6G | TH32 | A- 9G | | |
| C58 | B- 5G | C312 | A- 9G | C325 | B- 12G | C338 | B- 11I | C411 | A- 3F | L32 | B- 7F | TP8 | A- 6H | | | | | | |


4-79

## 4.38 ANA AUDIO SCHEMATIC DIAGRAMS

### — DIAGRAM 1/2 —

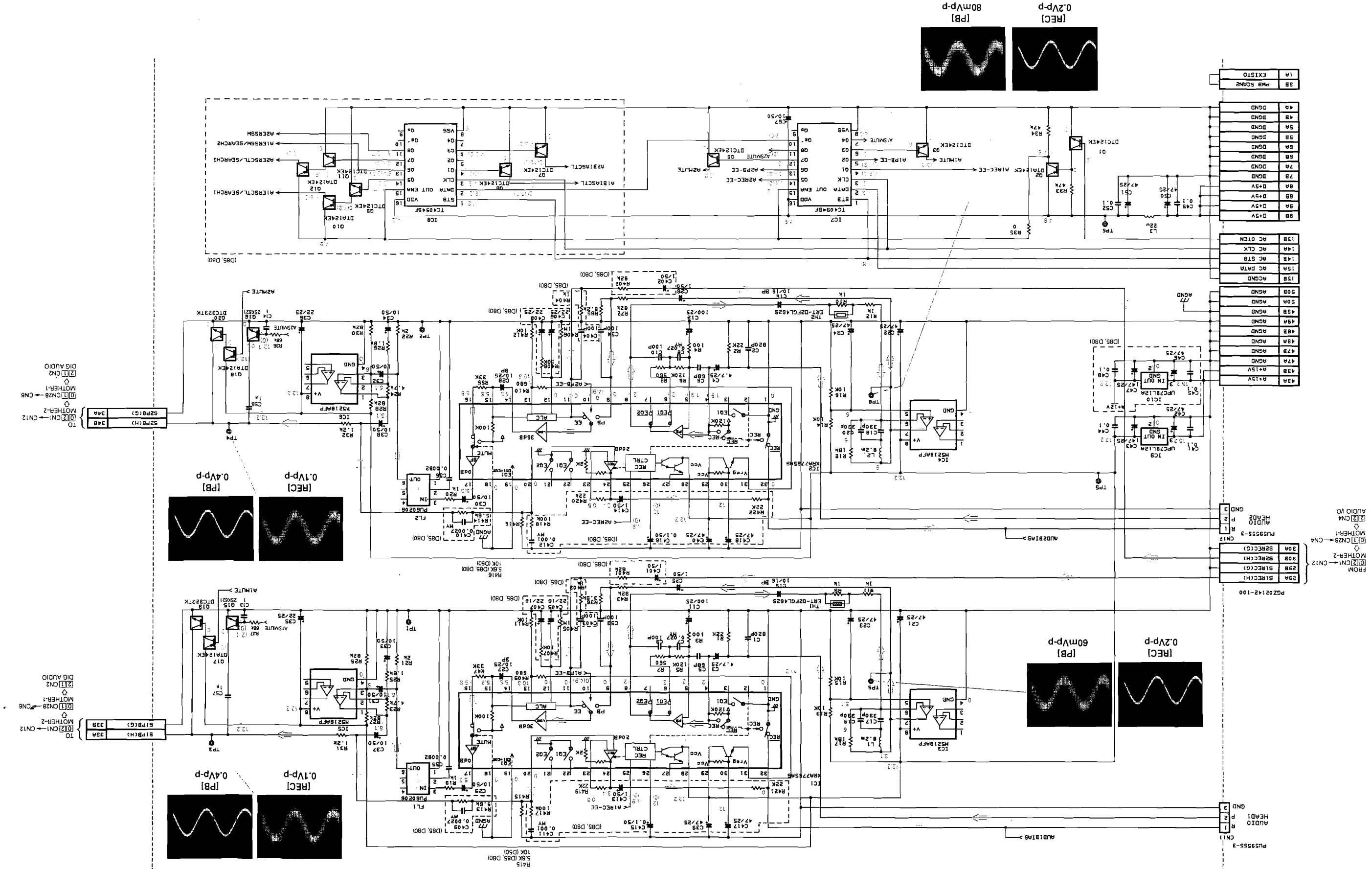

## — DIAGRAM 2/2 —

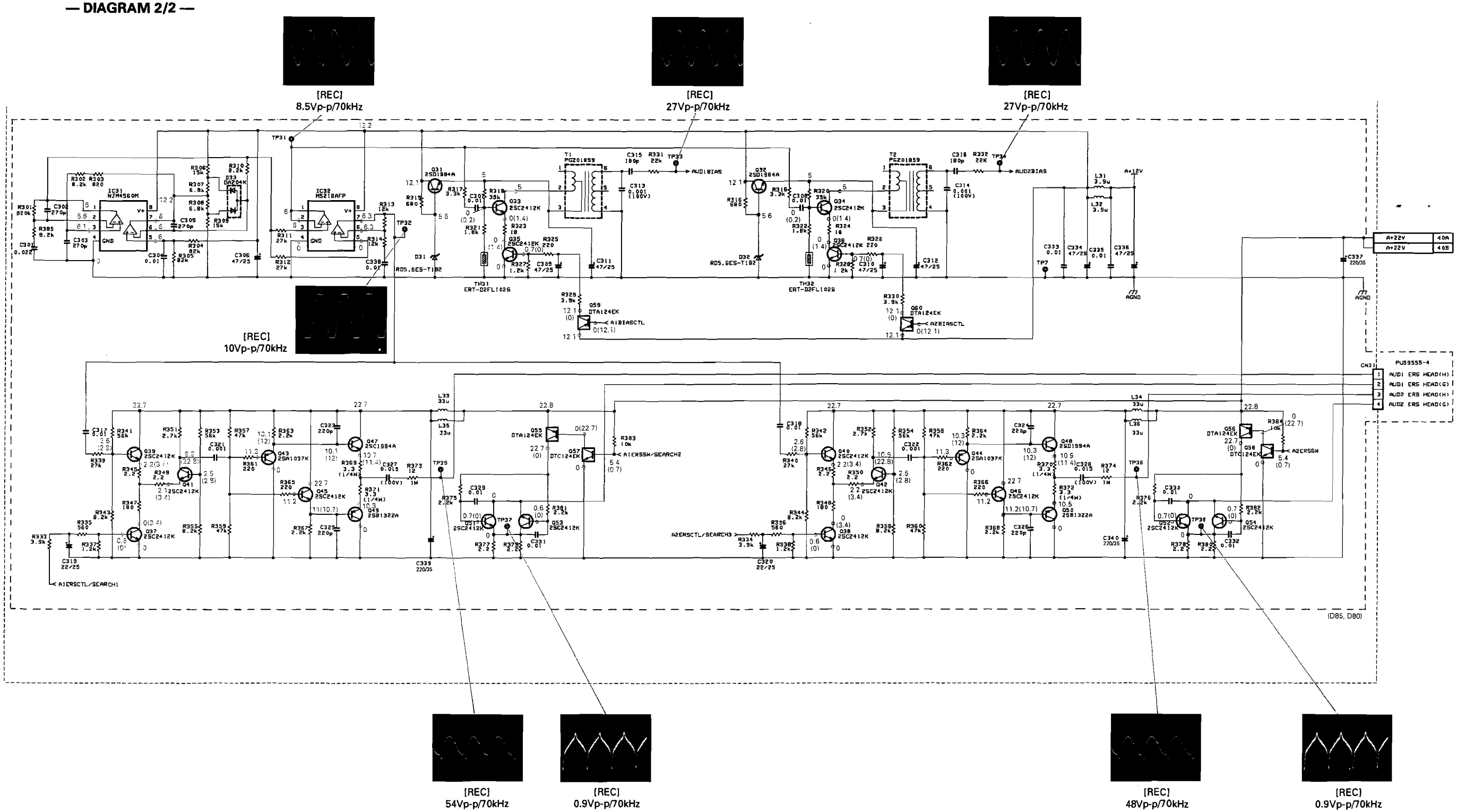
[REC]
8.5Vp-p/70kHz
[REC]
27Vp-p/70kHz
[REC]
27Vp-p/70kHz
[REC]
10Vp-p/70kHz
[REC]
54Vp-p/70kHz
[REC]
0.9Vp-p/70kHz
[REC]
48Vp-p/70kHz
[REC]
0.9Vp-p/70kHz
(D85, D80)

## 4.39 DIG AUDIO SCHEMATIC DIAGRAMS

### — DIAGRAM 1/3 —

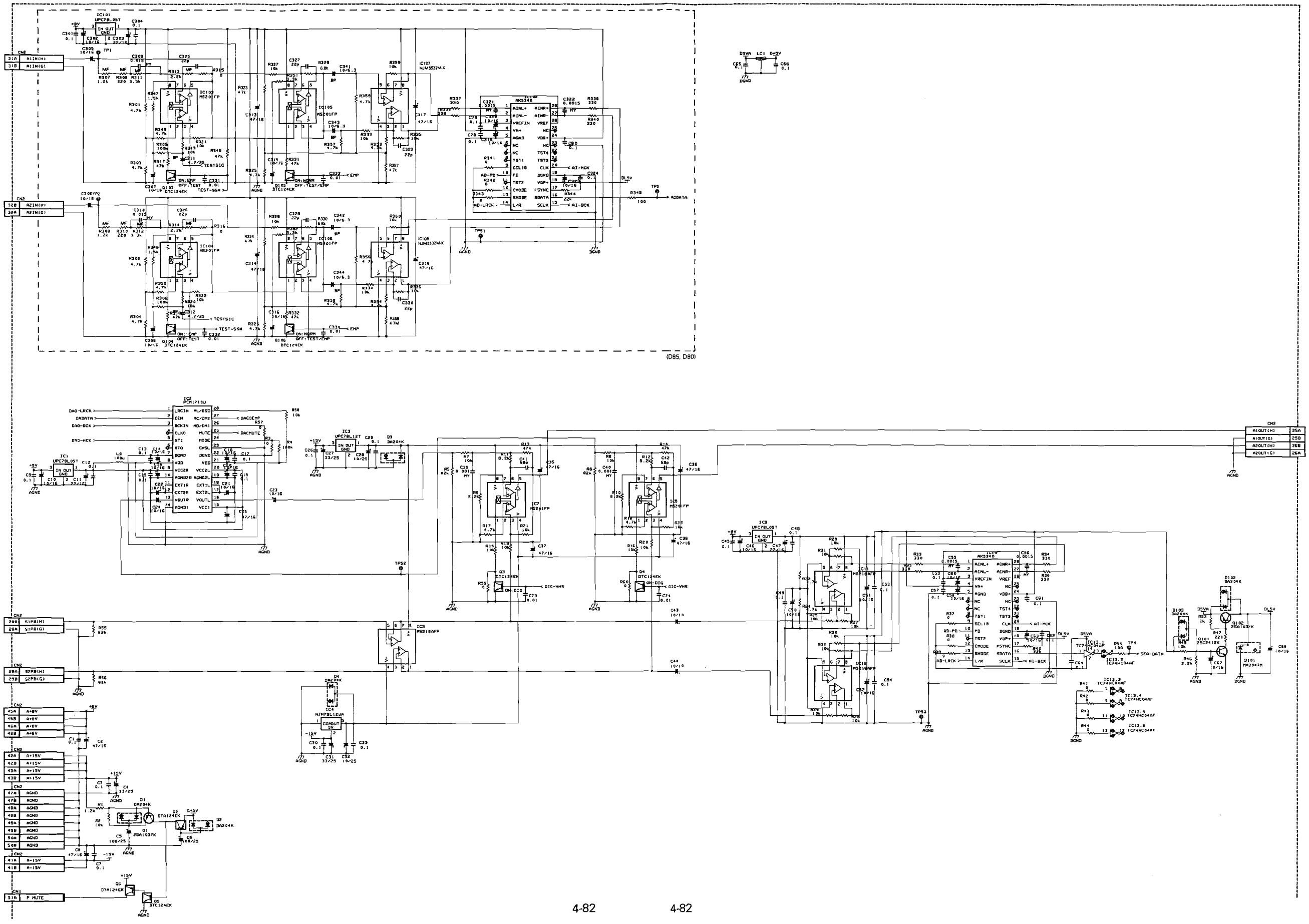

**— DIAGRAM 2/3 —**

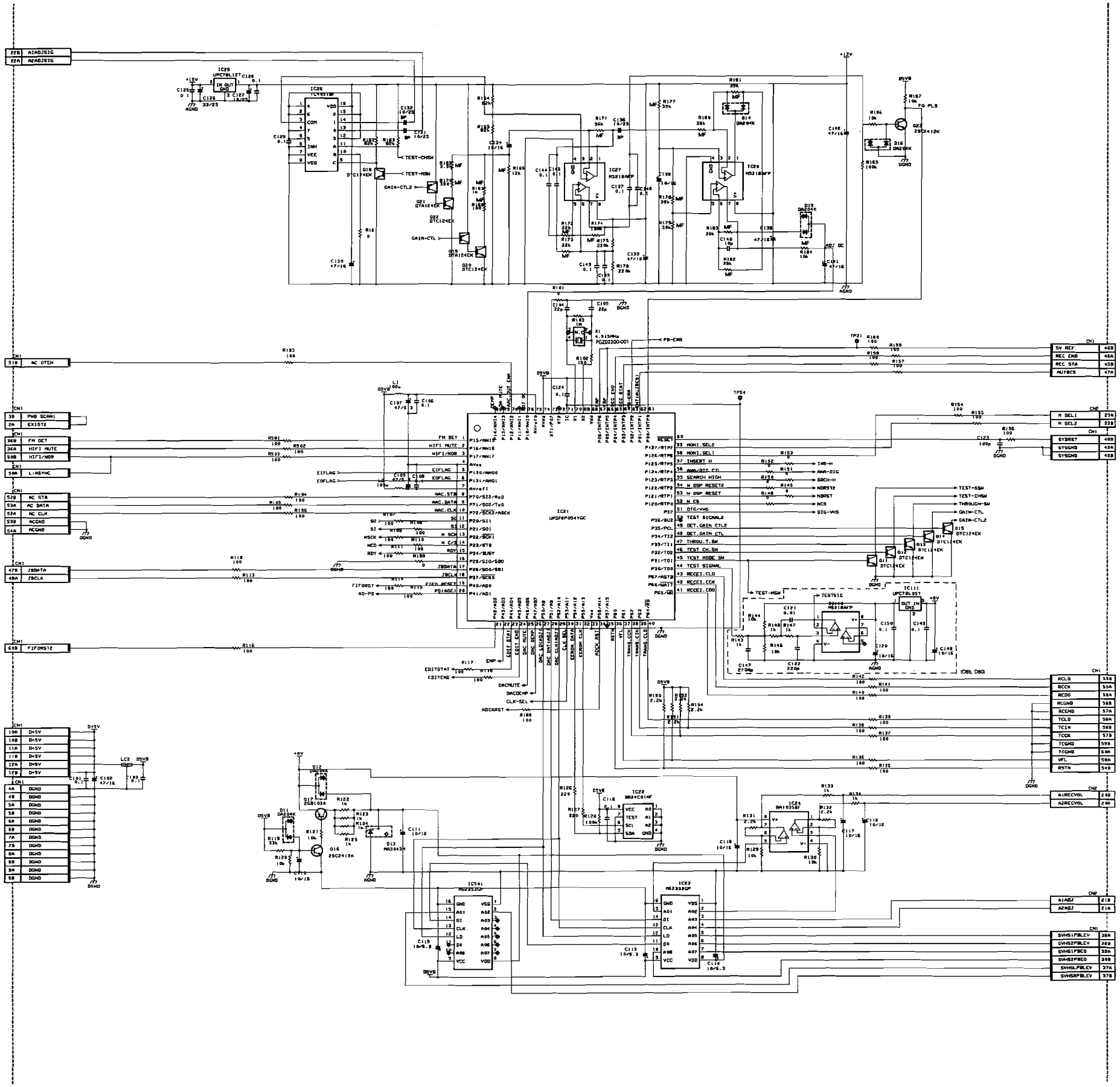

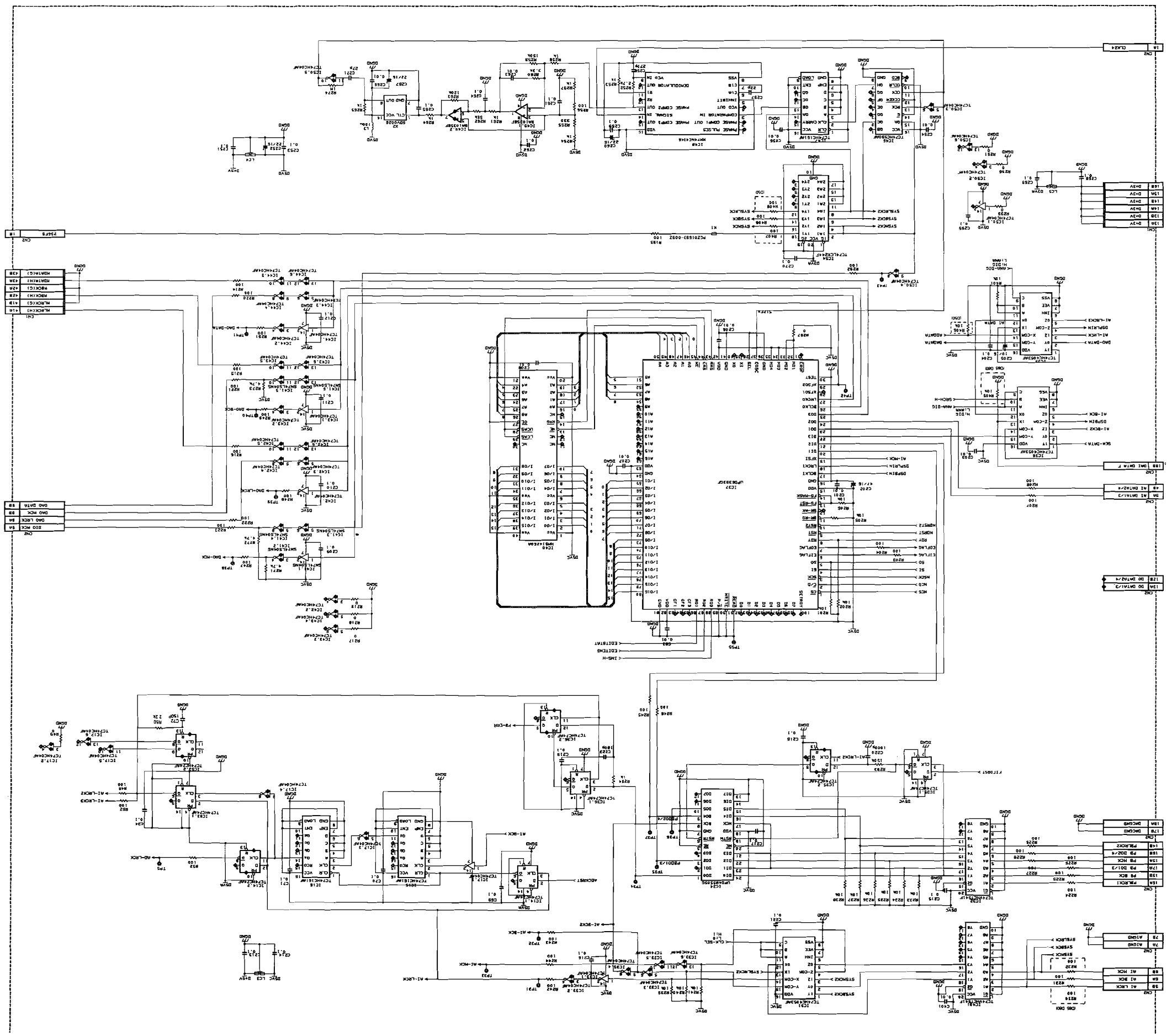

— DIAGRAM 3/3 —

## 4.40 DIG AUDIO CIRCUIT BOARD

— SIDE A —

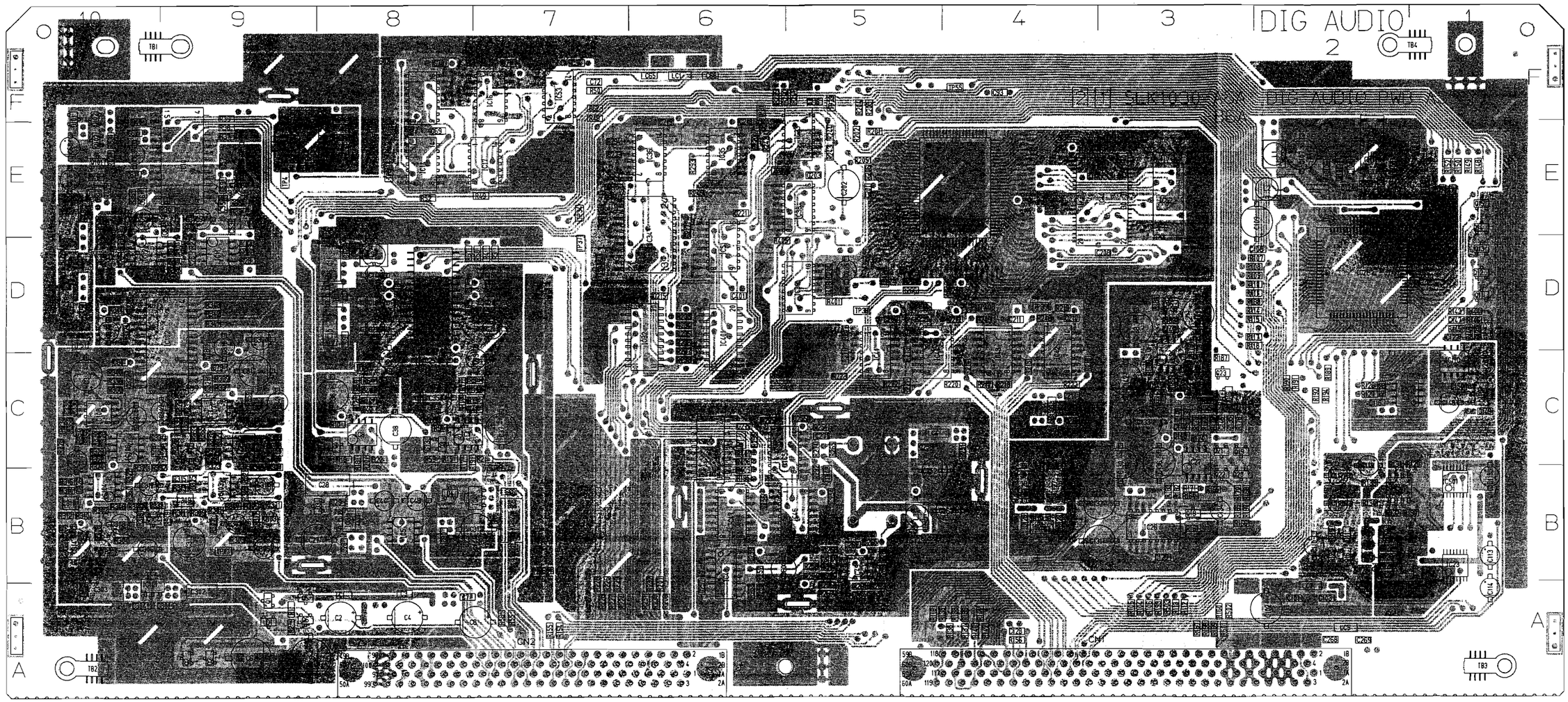


### ● ADDRESS TABLE OF BOARD PARTS

A-1C
Side — Y axis
X axis

Each address may have an address error by one interval.

| | | | | | | | | | | | | | | | | | | | | | | | | | | | | | | | |
|---|---|---|---|---|---|---|---|---|---|---|---|---|---|---|---|---|---|---|---|---|---|---|---|---|---|---|---|---|---|---|---|
| IC1 | 8D | IC41 | 5D | Q12 | 1D | R1 | 9B | R34 | 9E | R107 | 3E | R140 | 4B | R173 | 3C | R216 | 4D | R249 | 4D | R306 | 10C | R339 | 9D | | | C33 | 7C | C66 | 6F | C122 | 1D | C205 | 5D | C265 | 5B | C327 | 9C | TP39 | 4D |
| IC2 | 8E | IC42 | 4D | Q13 | 1E | R2 | 9B | R35 | 9E | R108 | 3D | R141 | 4B | R174 | 3C | R217 | 4D | R251 | 5C | R307 | 9B | R340 | 10D | C1 | 8B | C34 | 7F | C67 | 10E | C123 | 4B | C206 | 4D | C266 | 5B | C328 | 10C | TP40 | 4D |
| IC3 | 8C | IC43 | 4D | Q14 | 1E | R3 | 7E | R36 | 10E | R109 | 3D | R142 | 4B | R175 | 3C | R218 | 4D | R252 | 6B | R308 | 10B | R341 | 9D | C2 | 8B | C35 | 8C | C68 | 10E | C124 | 2E | C207 | 4E | C267 | 4C | C329 | 9C | TP41 | 5D |
| IC4 | 8C | IC44 | 5D | Q15 | 1E | R4 | 7E | R37 | 9E | R110 | 3D | R143 | 1D | R176 | 3C | R219 | 4D | R253 | 6B | R309 | 9C | R342 | 9D | C3 | 8B | C36 | 8C | C69 | 8F | C125 | 4C | C208 | 3E | C268 | 2B | C330 | 10C | TP42 | 5D |
| IC5 | 8C | IC46 | 5C | Q16 | 2B | R5 | 8D | R38 | 9F | R111 | 3D | R144 | 1D | R177 | 3D | R220 | 4D | R254 | 5B | R310 | 10C | R343 | 9D | C4 | 8B | C37 | 7C | C70 | 8F | C126 | 4C | C209 | 5D | C269 | 2B | C331 | 9C | TP43 | 5C |
| IC7 | 8C | IC47 | 6C | Q17 | 2B | R6 | 8D | R39 | 9F | R112 | 3B | R145 | 1D | R178 | 3D | R221 | 5D | R255 | 5B | R311 | 9C | R344 | 10D | C5 | 9A | C38 | 6C | C71 | 7F | C127 | 4C | C210 | 4D | C270 | 6C | C332 | 10C | TP51 | 10D |
| IC8 | 8C | IC48 | 6B | Q18 | 3C | R7 | 8D | R40 | 10F | R113 | 3B | R146 | 1D | R179 | 3D | R222 | 4D | R256 | 5B | R312 | 10C | R345 | 10D | C6 | 9A | C39 | 8D | C72 | 7F | C128 | 4C | C211 | 4D | C271 | 5C | C333 | 9C | TP52 | 8D |
| IC9 | 10D | IC49 | 5B | Q19 | 3C | R8 | 8D | R41 | 9E | R114 | 3D | R147 | 1D | R180 | 3D | R223 | 5D | R257 | 5B | R313 | 9C | R347 | 9C | C7 | 8B | C40 | 8D | C73 | 8C | C129 | 3B | C212 | 4D | C301 | 10B | C334 | 10C | TP53 | 10E |
| IC10 | 9E | IC50 | 6C | Q20 | 3C | R9 | 8C | R42 | 8E | R115 | 3D | R148 | 1E | R181 | 3C | R224 | 7B | R258 | 5B | R314 | 10C | R348 | 10C | C8 | 8B | C41 | 8C | C74 | 9C | C130 | 3C | C213 | 4C | C302 | 9B | C341 | 9C | TP54 | 1E |
| IC11 | 9E | IC51 | 6E | Q21 | 3C | R10 | 8C | R43 | 8E | R116 | 5B | R149 | 1E | R182 | 3D | R225 | 7B | R259 | 5B | R315 | 9C | R349 | 9C | C9 | 8D | C42 | 8C | C78 | 9D | C131 | 4B | C214 | 4C | C303 | 10B | C342 | 10C | TP55 | 4F |
| IC12 | 10E | IC52 | 3E | Q22 | 3C | R11 | 8C | R44 | 8F | R117 | 3D | R150 | 1E | R183 | 3D | R226 | 7B | R280 | 5B | R316 | 10C | R350 | 10C | C10 | 8D | C43 | 8C | C79 | 9D | C132 | 4C | C215 | 6D | C304 | 10B | C343 | 9C | | |
| IC13 | 9F | IC53 | 7F | Q23 | 3D | R12 | 8C | R45 | 10E | R118 | 3D | R151 | 1E | R184 | 3D | R227 | 7B | R261 | 5B | R317 | 9C | R351 | 9C | C11 | 8E | C44 | 8C | C80 | 10D | C133 | 3C | C216 | 5F | C305 | 9B | C344 | 10C | CN1 | 3A |
| IC14 | 8F | IC54 | 6C | Q101 | 10E | R13 | 8C | R46 | 10E | R119 | 2B | R152 | 1E | R185 | 3C | R228 | 7B | R262 | 5B | R352 | 10C | R352 | 10C | C12 | 8E | C45 | 10D | C93 | 4F | C134 | 3C | C217 | 6E | C306 | 10B | C401 | 6D | CN2 | 7A |
| IC15 | 8F | IC101 | 10B | Q102 | 10E | R14 | 8C | R47 | 10E | R120 | 2B | R153 | 1E | R186 | 3C | R229 | 7B | R263 | 5B | R319 | 9C | R353 | 9C | C13 | 8D | C46 | 10D | C101 | 2B | C135 | 3C | C218 | 6F | C307 | 9B | | | | |
| IC16 | 7F | IC102 | 9D | Q103 | 9C | R15 | 8C | R48 | 7F | R121 | 2B | R154 | 7B | R187 | 3D | R230 | 6B | R264 | 5B | R320 | 10C | R354 | 10C | C14 | 8D | C47 | 10E | C102 | 2B | C136 | 3C | C219 | 6F | C308 | 10B | L1 | 2E | K1 | 6C |
| IC17 | 7E | IC103 | 9C | Q104 | 10C | R16 | 8C | R49 | 7E | R122 | 2B | R155 | 7B | R188 | 3D | R231 | 6B | R265 | 5C | R321 | 9C | R355 | 9C | C15 | 8D | C48 | 10E | C103 | 2B | C137 | 3C | C220 | 6E | C309 | 9C | L2 | 2E | | |
| IC21 | 2D | IC104 | 10C | Q105 | 9C | R17 | 8C | R50 | 7F | R123 | 2B | R156 | 4B | R189 | 2D | R232 | 6B | R266 | 5D | R322 | 10C | R356 | 10C | C16 | 8D | C49 | 9D | C104 | 2E | C138 | 3D | C221 | 6E | C310 | 10C | L3 | 5C | LC1 | 6F |
| IC22 | 2C | IC105 | 9C | Q106 | 10C | R18 | 8C | R52 | 8E | R124 | 2B | R157 | 3B | R190 | 2D | R233 | 6D | R267 | 5D | R323 | 9C | R357 | 9C | C17 | 8D | C50 | 10E | C105 | 2E | C139 | 3D | C222 | 3E | C311 | 9C | L9 | 8E | LC2 | 2B |
| IC23 | 1B | IC106 | 10C | | | R19 | 8C | R53 | 10E | R125 | 2B | R158 | 3B | R191 | 2D | R234 | 6D | R271 | 5D | R324 | 10C | R358 | 10C | C18 | 7D | C51 | 9E | C106 | 2E | C140 | 3D | C223 | 4E | C312 | 10C | | | LC3 | 4C |
| IC24 | 2C | IC107 | 9C | D1 | 9B | R20 | 8C | R54 | 9E | R126 | 2D | R159 | 3B | R192 | 2C | R235 | 6D | R272 | 5D | R325 | 9C | R359 | 9C | C19 | 8D | C52 | 10E | C107 | 2E | C141 | 3D | C251 | 4C | C313 | 9B | TP1 | 9B | LC4 | 5C |
| IC25 | 4B | IC108 | 10C | D2 | 9A | R21 | 7C | R55 | 7B | R127 | 2C | R160 | 3B | R193 | 3B | R236 | 6D | R273 | 5D | R326 | 10C | R360 | 10D | C20 | 7D | C53 | 9E | C108 | 3E | C142 | 3D | C252 | 5C | C314 | 10B | TP2 | 10B | LC5 | 2B |
| IC26 | 3B | IC110 | 1D | D3 | 9C | R22 | 8C | R56 | 7B | R128 | 2D | R161 | 3B | R194 | 2C | R237 | 6D | R274 | 5C | R327 | 9C | R401 | 5D | C21 | 7D | C54 | 10E | C109 | 3E | C143 | 3C | C253 | 5C | C315 | 9C | TP3 | 10D | | |
| IC27 | 3C | IC111 | 1C | D4 | 8C | R23 | 9E | R57 | 8E | R129 | 2C | R162 | 3C | R195 | 6C | R238 | 6D | R291 | 5D | R328 | 10C | R405 | 6E | C22 | 8D | C55 | 9E | C110 | 2B | C144 | 3C | C254 | 5C | C316 | 10C | TP4 | 9E | TB1 | 9F |
| IC28 | 3D | IC401 | 6D | D11 | 2B | R24 | 9D | R58 | 8E | R130 | 2C | R163 | 3C | R201 | 5E | R239 | 6F | R292 | 5C | R329 | 9C | R406 | 5D | C23 | 8D | C56 | 10E | C111 | 2B | C145 | 3C | C255 | 5C | C317 | 9D | TP5 | 8E | TB2 | 10A |
| IC32 | 6D | IC501 | 1C | D12 | 2B | R25 | 9E | R59 | 8C | R131 | 2C | R164 | 3C | R202 | 5F | R240 | 6F | R293 | 6E | R330 | 10C | R407 | 6C | C24 | 8D | C57 | 9E | C113 | 1B | C146 | 3C | C256 | 6C | C318 | 10D | TP21 | 1E | TB3 | 1A |
| IC33 | 5F | | | D13 | 2B | R26 | 10E | R60 | 8C | R132 | 2C | R165 | 3C | R203 | 5F | R241 | 5F | R294 | 7E | R331 | 9C | R408 | 6C | C25 | 8D | C58 | 9E | C114 | 1B | C147 | 1D | C257 | 6B | C319 | 9D | TP31 | 6F | TB4 | 2F |
| IC34 | 6E | Q1 | 9B | D14 | 3D | R27 | 9E | R62 | 7F | R133 | 2C | R166 | 3B | R204 | 5F | R242 | 6E | R295 | 6C | R332 | 10C | R409 | 6C | C26 | 8B | C59 | 9E | C115 | 1C | C148 | 1C | C258 | 6B | C320 | 9D | TP32 | 6E | TB5 | 10F |
| IC35 | 6E | Q2 | 9A | D15 | 3D | R28 | 10E | R101 | 2E | R134 | 2C | R167 | 3C | R205 | 5E | R243 | 5E | R296 | 6C | R333 | 9C | R501 | 3B | C27 | 9B | C60 | 9E | C116 | 2C | C149 | 1C | C259 | 6B | C321 | 9D | TP33 | 5F | TB6 | 1F |
| IC36 | 6E | Q3 | 8C | D16 | 3C | R29 | 9E | R102 | 2E | R135 | 5B | R168 | 3C | R206 | 5E | R244 | 5E | R301 | 9C | R334 | 10C | R502 | 3B | C28 | 8C | C61 | 10E | C117 | 2C | C150 | 1D | C260 | 6B | C322 | 10D | TP34 | 7E | TB7 | 6A |
| IC37 | 4E | Q4 | 8C | D101 | 10F | R30 | 9E | R103 | 2E | R136 | 4B | R169 | 3C | R207 | 6B | R245 | 6E | R302 | 10C | R335 | 9C | R503 | 3B | C29 | 8C | C62 | 10E | C118 | 2C | C201 | 5E | C261 | 5B | C323 | 10D | TP35 | 7E | | |
| IC38 | 5E | Q5 | 9B | D102 | 10F | R31 | 9E | R104 | 3B | R137 | 4B | R170 | 3C | R208 | 6B | R246 | 7E | R303 | 9B | R336 | 10C | R601 | 7B | C30 | 8B | C63 | 10E | C119 | 2C | C202 | 5E | C262 | 5B | C324 | 10D | TP36 | 7D | X1 | 2E |
| IC39 | 5D | Q6 | 9B | D103 | 10E | R32 | 9E | R105 | 3B | R138 | 4B | R171 | 3C | R214 | 4D | R247 | 5D | R304 | 10B | R337 | 9D | R602 | 8F | C31 | 8B | C64 | 8F | C120 | 1D | C203 | 5E | C263 | 5B | C325 | 9C | TP37 | 7E | X2 | 5C |
| IC40 | 4E | Q11 | 1D | | | R33 | 9E | R106 | 3B | R139 | 4B | R172 | 3C | R215 | 4D | R248 | 4D | R305 | 9C | R338 | 10D | R946 | 9C | C32 | 7C | C65 | 6F | C121 | 1D | C204 | 5D | C264 | 5B | C326 | 10C | TP38 | 5D | | |


4-85

## 4.42 AUDIO I/O CIRCUIT BOARD

— SIDE A —

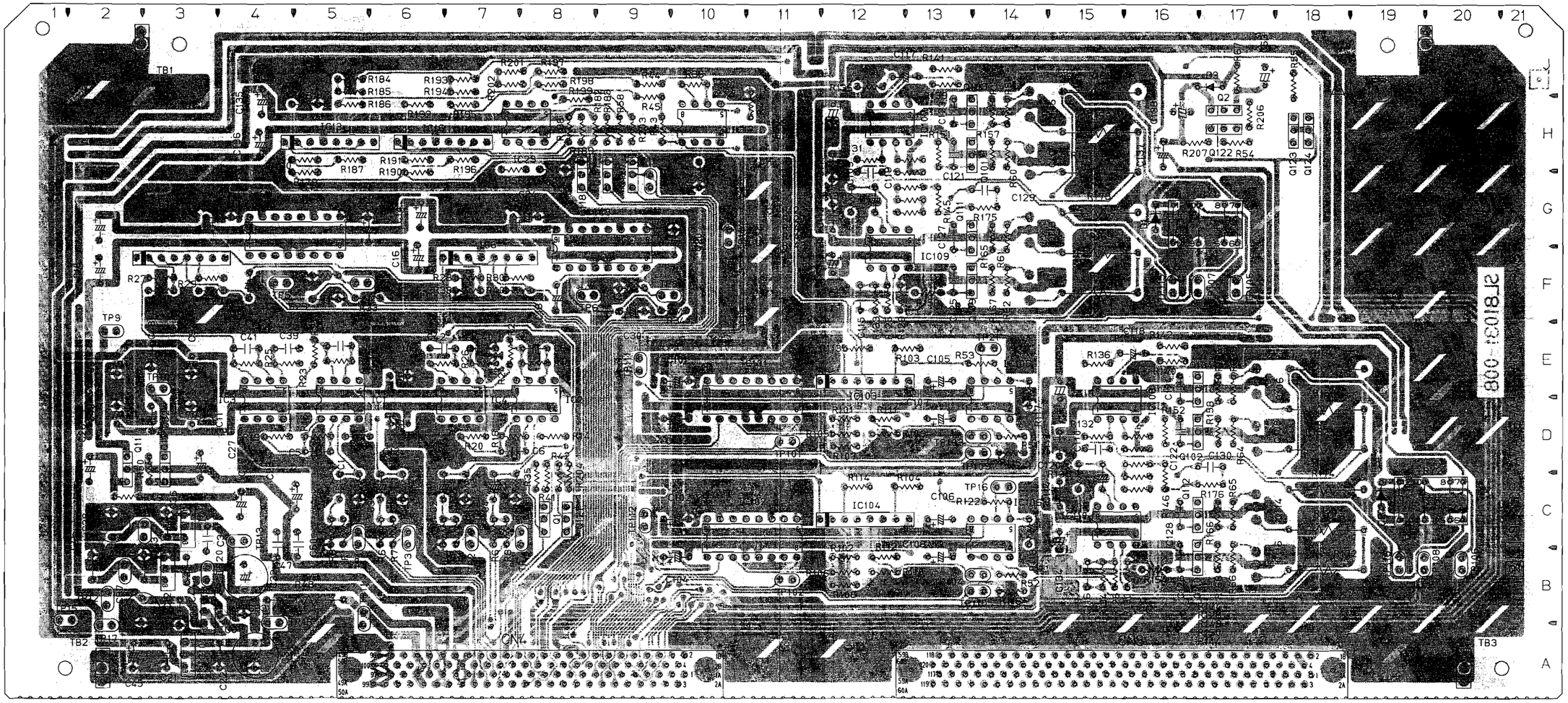


### ● ADDRESS TABLE OF BOARD PARTS

Side — A-1C — Y axis / X axis

Each address may have an address error by one interval.

| | | | | | | | | | | | | | | | | | | | | | | | | | | | | | |
|---|---|---|---|---|---|---|---|---|---|---|---|---|---|---|---|---|---|---|---|---|---|---|---|---|---|---|---|---|---|
| IC1 | 5E | IC106 | 14C | Q112 | 17D | R5 | 6D | R26 | 6E | R47 | 11H | R101 | 12E | R125 | 12F | R146 | 16D | R167 | 14F | R190 | 6H | C5 | 5D | C26 | 2D | C47 | 4C | C115 | 12F | C136 | 4H | TP18 | 4B | RY1 | 16G |
| IC2 | 7E | IC107 | 12H | Q113 | 14G | R6 | 7D | R27 | 2F | R48 | 5C | R102 | 12C | R126 | 15C | R147 | 13G | R168 | 17C | R191 | 6H | C6 | 7D | C27 | 3D | C48 | 2E | C116 | 15C | C137 | 16H | TP19 | 2C | RY2 | 19D |
| IC3 | 4E | IC108 | 15E | Q114 | 17D | R7 | 6D | R28 | 7F | R49 | 2D | R103 | 12E | R127 | 13H | R148 | 16D | R169 | 15G | R192 | 6H | C7 | 5F | C28 | 4D | C49 | 2E | C117 | 12J | C138 | 16H | TP20 | 3C | | |
| IC4 | 6E | IC109 | 12F | Q115 | 14F | R8 | 7D | R29 | 3F | R50 | 2D | R104 | 12D | R128 | 16D | R149 | 13G | R170 | 18C | R193 | 7J | C8 | 8E | C29 | 5F | C50 | 4C | C118 | 16E | | | TP21 | 14E | TB1 | 3J |
| IC5 | 2G | IC110 | 15C | Q116 | 17C | R9 | 5D | R30 | 7F | R51 | 14E | R105 | 12E | R129 | 13F | R150 | 16D | R171 | 16F | R194 | 7H | C9 | 3E | C30 | 9F | C51 | 2E | C119 | 12G | TP1 | 5C | TP101 | 11D | TB2 | 1B |
| IC6 | 6G | | | Q117 | 9H | R10 | 7D | R31 | 5F | R52 | 14C | R106 | 12C | R130 | 16C | R151 | 13H | R172 | 19C | R195 | 7H | C10 | 6E | C31 | 4B | C52 | 2E | C120 | 15D | TP2 | 7C | TP102 | 11C | TB3 | 21B |
| IC7 | 4G | Q1 | 8D | Q118 | 8H | R11 | 6D | R32 | 9F | R53 | 14E | R107 | 12D | R131 | 12H | R152 | 16D | R173 | 16G | R196 | 7H | C11 | 3E | C32 | 4C | C53 | 17J | C121 | 13H | TP3 | 6C | TP103 | 14E | TB4 | 19J |
| IC8 | 8F | Q2 | 17H | Q120 | 9H | R12 | 7D | R33 | 6F | R54 | 17H | R108 | 12C | R132 | 15E | R153 | 13F | R174 | 19D | R197 | 8J | C12 | 6E | C33 | 3B | C101 | 9E | C122 | 16D | TP4 | 7C | TP104 | 14C | | |
| IC9 | 3C | Q11 | 2D | Q121 | 8D | R13 | 5E | R34 | 10F | R55 | 18H | R109 | 12E | R133 | 12F | R154 | 16C | R175 | 14G | R198 | 8J | C13 | 2G | C34 | 3C | C102 | 9D | C123 | 13H | TP5 | 4F | TP105 | 17F | CN3 | 16A |
| IC10 | 3B | Q12 | 3D | Q122 | 17H | R14 | 8E | R35 | 8D | R56 | 7H | R110 | 12C | R134 | 15C | R155 | 14H | R176 | 17D | R199 | 8H | C14 | 6G | C35 | 3C | C103 | 9E | C124 | 16E | TP6 | 8F | TP106 | 20C | CN4 | 8A |
| IC11 | 3D | Q101 | 14H | Q123 | 18H | R15 | 5E | R36 | 10J | R57 | 8H | R111 | 13E | R135 | 12J | R156 | 17E | R179 | 4H | R201 | 7J | C15 | 2G | C36 | 3C | C104 | 9C | C125 | 13F | TP7 | 5F | TP107 | 17F | | |
| IC12 | 3C | Q102 | 17E | Q124 | 18H | R16 | 7E | R37 | 2F | R58 | 9H | R112 | 13C | R136 | 15E | R157 | 14H | R180 | 5H | R202 | 7J | C16 | 6G | C37 | 2C | C105 | 13E | C126 | 16C | TP8 | 9F | TP108 | 20C | | |
| IC13 | 4H | Q103 | 14H | | | R17 | 5E | R38 | 7F | R59 | 14H | R113 | 12E | R137 | 12G | R158 | 17E | R181 | 4H | R203 | 9H | C17 | 4F | C38 | 2D | C106 | 13D | C127 | 13G | TP9 | 2F | TP109 | 14D | | |
| IC16 | 6H | Q104 | 17E | D1 | 16G | R18 | 8E | R39 | 3F | R60 | 14H | R114 | 12D | R138 | 15D | R159 | 15H | R182 | 8H | R204 | 8D | C18 | 8F | C39 | 4E | C107 | 13E | C128 | 16C | TP10 | 2E | TP110 | 14C | | |
| IC17 | 10H | Q105 | 14H | D2 | 19D | R19 | 4E | R40 | 7F | R61 | 14G | R115 | 14D | R139 | 13J | R160 | 18E | R183 | 9H | R206 | 17H | C19 | 5G | C40 | 7E | C108 | 13C | C129 | 14G | TP11 | 5B | TP111 | 9E | | |
| IC23 | 7H | Q106 | 17E | D3 | 17J | R20 | 7E | R41 | 8D | R62 | 14F | R116 | 14C | R140 | 16E | R161 | 16H | R184 | 5J | R207 | 17H | C20 | 10G | C41 | 4E | C109 | 12H | C130 | 17D | TP12 | 2C | TP112 | 9D | | |
| IC101 | 10E | Q107 | 14H | | | R21 | 5F | R42 | 8D | R63 | 17E | R117 | 14E | R141 | 13J | R162 | 19D | R185 | 5H | | | C21 | 3B | C42 | 7E | C110 | 15D | C131 | 12H | TP13 | 4C | TP113 | 9H | | |
| IC102 | 10C | Q108 | 17D | R1 | 5D | R22 | 7F | R43 | 9H | R64 | 17D | R118 | 14D | R142 | 16F | R163 | 16H | R186 | 5H | C1 | 5D | C22 | 3B | C43 | 2C | C111 | 12G | C132 | 15E | TP14 | 2C | TP114 | 10G | | |
| IC103 | 11E | Q109 | 14F | R2 | 7D | R23 | 4E | R44 | 9J | R65 | 17C | R122 | 14D | R143 | 13G | R164 | 19E | R187 | 5H | C2 | 6D | C23 | 3G | C44 | 3C | C112 | 15D | C133 | 12G | TP15 | 1B | TP115 | 16F | | |
| IC104 | 11D | Q110 | 17C | R3 | 5C | R24 | 7E | R45 | 9H | R66 | 17C | R123 | 13H | R144 | 16D | R165 | 14G | R188 | 8H | C3 | 6D | C24 | 7G | C45 | 2B | C113 | 12G | C134 | 15C | TP16 | 14D | TP116 | 19C | | |
| IC105 | 14E | Q111 | 14G | R4 | 6C | R25 | 4E | R46 | 10G | R67 | 17H | R124 | 16E | R145 | 13G | R166 | 17D | R189 | 8H | C4 | 7D | C25 | 4D | C46 | 2C | C114 | 15D | C135 | 4J | TP17 | 2B | | | | |

## 4.43 M-CTL/SERVO SCHEMATIC DIAGRAMS

### — DIAGRAM 1/2 —

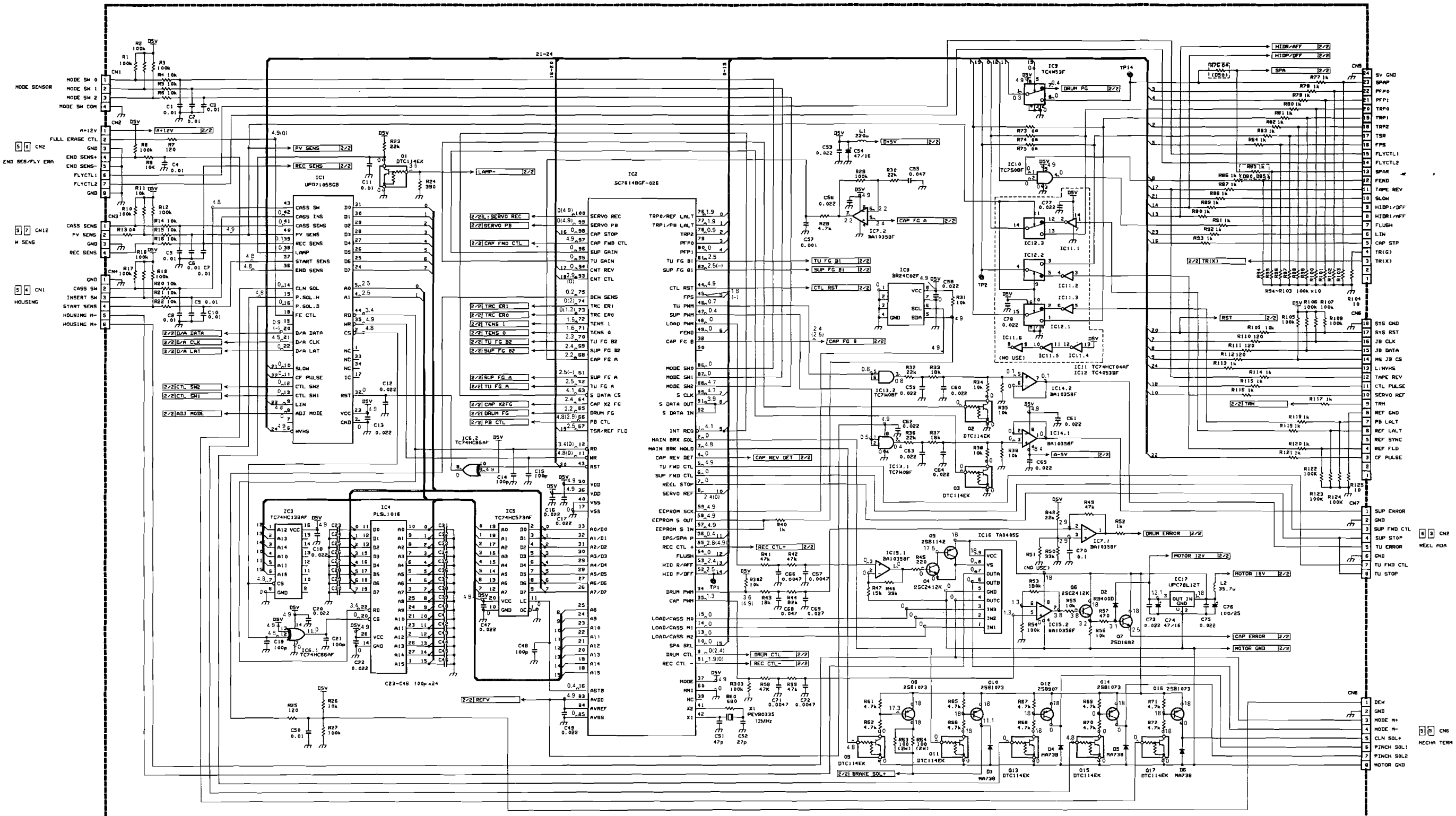


3 0 M CTL/SERVO (1/2)

NOTE:UNLESS OTHERWISE SPECIFIED:
ALL RESISTANCE VALUES ARE IN OHMS.(1/10W)
ALL INDUCTANCE VALUES ARE IN H.

ALL CAPACITANCE VALUES ARE IN uF
ELECTROLYTIC
NON-POLARIZED
CERAMIC

| | LAST NO. | VACANT NO. |
|---|---|---|
| IC | 42 | |
| Q | 29 | |
| D | 14 | |
| R | 306 | |
| C | 175 | |
| L | 12 | |
| TP | 14 | |
| CN | 17 | |

## — DIAGRAM 2/2 —

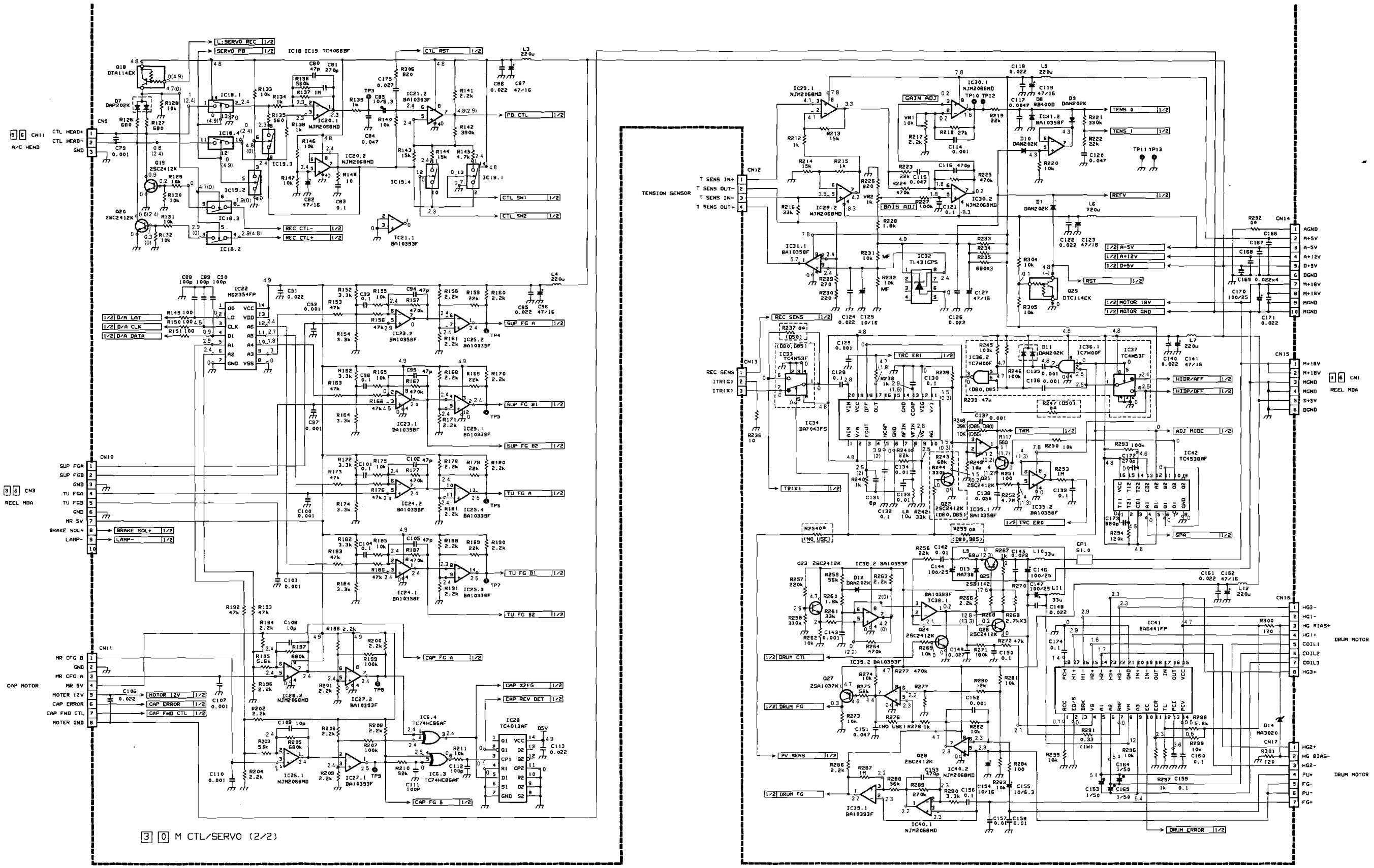




4-90

## ● ADDRESS TABLE OF BOARD PARTS

Side — A-1C (A: Y axis, 1C: X axis)

Each address may have an address error by one interval.

| | | | | | | | | | | | | | | | | | | | |
|---|---|---|---|---|---|---|---|---|---|---|---|---|---|---|---|---|---|---|---|
| IC1 | A- 9G | D10 | B- 2C | R77 | B- 5A | R159 | B- 10F | R241 | B- 10C | C13 | B- 8G | C95 | B- 13F | L1 | A- 4F |
| IC2 | A- 7G | D11 | B- 9A | R78 | B- 5A | R160 | B- 11F | R242 | B- 10C | C14 | B- 7H | C96 | A- 13G | L2 | A- 9J |
| IC3 | A- 7I | D12 | B- 2F | R79 | B- 5A | R161 | B- 10F | R243 | B- 10B | C15 | B- 7H | C97 | B- 14F | L3 | A- 13H |
| IC4 | A- 6I | D13 | B- 3I | R80 | B- 6A | R162 | B- 12G | R244 | B- 10B | C16 | B- 8G | C98 | B- 12G | L4 | A- 13G |
| IC5 | A- 3J | D14 | B- 2F | R81 | B- 6A | R163 | B- 11G | R245 | B- 9B | C17 | B- 8G | C99 | B- 12G | L5 | A- 4B |
| IC6 | A- 7E | | | R82 | B- 6A | R164 | B- 11G | R246 | B- 9B | C18 | B- 7I | C100 | B- 14F | L6 | A- 3D |
| IC7 | A- 5G | R1 | B- 7K | R83 | B- 6A | R165 | B- 12G | R247 | B- 9B | C19 | B- 6E | C101 | B- 12E | L7 | A- 9D |
| IC8 | A- 7E | R2 | B- 6K | R84 | B- 6A | R166 | B- 12G | R248 | B- 11B | C20 | B- 6E | C102 | B- 12E | L8 | A- 11C |
| IC9 | A- 6D | R3 | B- 6K | R85 | B- 6A | R167 | B- 12G | R249 | B- 11B | C21 | B- 6E | C103 | B- 13F | L9 | A- 3H |
| IC10 | A- 8E | R4 | B- 7J | R86 | B- 6A | R168 | B- 10E | R250 | B- 11A | C22 | B- 6I | C104 | B- 12F | L10 | A- 3H |
| IC11 | A- 9E | R5 | B- 6J | R87 | B- 6B | R169 | B- 10E | R251 | B- 11B | C23 | B- 4I | C105 | B- 12F | L11 | A- 2H |
| IC12 | A- 9E | R6 | B- 6J | R88 | B- 6B | R170 | B- 11E | R252 | B- 10B | C24 | B- 4I | C106 | A- 13E | L12 | A- 2F |
| IC13 | A- 5E | R7 | A- 3K | R89 | B- 6B | R171 | B- 10E | R253 | B- 10A | C25 | B- 4I | C107 | B- 14D | | |
| IC14 | A- 5E | R8 | A- 3K | R90 | B- 7B | R172 | B- 12E | R254 | B- 10B | C26 | B- 4I | C108 | B- 12D | TP1 | A- 6F |
| IC15 | A- 9I | R9 | A- 3K | R91 | B- 7B | R173 | B- 12E | R255 | B- 10B | C27 | B- 4I | C109 | B- 12D | TP2 | A- 8F |
| IC16 | A- 9J | R10 | B- 6K | R92 | B- 7B | R174 | B- 12E | R256 | B- 2G | C28 | B- 4I | C110 | B- 14D | TP3 | A- 13J |
| IC17 | B- 10J | R11 | B- 5K | R93 | B- 7B | R175 | B- 12E | R257 | B- 2F | C29 | B- 4I | C111 | B- 6E | TP4 | A- 11F |
| IC18 | A- 13I | R12 | B- 5K | R94 | A- 6A | R176 | B- 12E | R258 | B- 2G | C30 | B- 5I | C112 | B- 6E | TP5 | A- 11E |
| IC19 | A- 12I | R13 | B- 5J | R95 | A- 6A | R177 | B- 12E | R259 | B- 2F | C31 | B- 5I | C113 | B- 10D | TP6 | A- 11E |
| IC20 | A- 12H | R14 | B- 6J | R96 | A- 6A | R178 | B- 10E | R260 | B- 2F | C32 | B- 5I | C114 | B- 3D | TP7 | A- 11E |
| IC21 | A- 12J | R15 | B- 5J | R97 | A- 6A | R179 | B- 10E | R261 | B- 2G | C33 | B- 5I | C115 | B- 3C | TP8 | A- 11C |
| IC22 | A- 11F | R16 | B- 5J | R98 | A- 6A | R180 | B- 11E | R262 | B- 2G | C34 | B- 5I | C116 | B- 3C | TP9 | A- 11E |
| IC23 | A- 12G | R17 | B- 8K | R99 | A- 6A | R181 | B- 10E | R263 | B- 2F | C35 | B- 5I | C117 | B- 2C | TP10 | A- 14C |
| IC24 | A- 12F | R18 | B- 8K | R100 | A- 6A | R182 | B- 11F | R264 | B- 2G | C36 | B- 5I | C118 | B- 3B | TP11 | A- 14B |
| IC25 | A- 11E | R19 | B- 8K | R101 | A- 5A | R183 | B- 12F | R265 | B- 2G | C37 | B- 6I | C119 | A- 3B | TP12 | B- 14C |
| IC26 | A- 12D | R20 | B- 8J | R102 | A- 5A | R184 | B- 12F | R266 | B- 2G | C38 | B- 6I | C120 | B- 2C | TP13 | B- 14B |
| IC27 | A- 11D | R21 | B- 8J | R103 | A- 5A | R185 | B- 12F | R267 | B- 3I | C39 | B- 6I | C121 | B- 3C | TP14 | A- 6D |
| IC28 | A- 10D | R22 | B- 7J | R104 | A- 7A | R186 | B- 12F | R268 | B- 3I | C40 | B- 5I | C122 | B- 3D | | |
| IC29 | A- 3C | R23 | B- 9F | R105 | B- 4B | R187 | B- 12F | R269 | B- 3I | C41 | B- 5I | C123 | A- 3D | CP1 | A- 3I |
| IC30 | A- 3C | R24 | B- 9F | R106 | B- 4B | R188 | B- 10E | R270 | B- 3I | C42 | B- 5I | C124 | B- 2C | | |
| IC31 | A- 2C | R25 | B- 7F | R107 | B- 3B | R189 | B- 10E | R271 | B- 2G | C43 | B- 6I | C125 | A- 2D | CN1 | A- 6K |
| IC32 | A- 2E | R26 | B- 7F | R108 | B- 3B | R190 | B- 11E | R272 | B- 2G | C44 | B- 6I | C126 | B- 4C | CN2 | A- 3J |
| IC33 | A- 10B | R27 | B- 7F | R109 | B- 3B | R191 | B- 10E | R273 | B- 3F | C45 | B- 6I | C127 | A- 4C | CN3 | A- 5K |
| IC34 | A- 11B | R28 | B- 5F | R110 | B- 3B | R192 | B- 12E | R274 | B- 3E | C46 | B- 6I | C128 | B- 11B | CN4 | A- 8J |
| IC35 | A- 11B | R29 | B- 5F | R111 | B- 4B | R193 | B- 12D | R275 | B- 3E | C47 | B- 3I | C129 | B- 11B | CN5 | A- 6B |
| IC36 | A- 9B | R30 | B- 5F | R112 | B- 4B | R194 | B- 12C | R276 | B- 3E | C48 | B- 2J | C130 | B- 11B | CN6 | A- 4A |
| IC37 | A- 9B | R31 | B- 7E | R113 | B- 4B | R195 | B- 12D | R277 | B- 3E | C49 | B- 8G | C131 | B- 11C | CN7 | A- 14H |
| IC38 | A- 2G | R32 | B- 5E | R114 | B- 4B | R196 | B- 12C | R278 | B- 3E | C50 | B- 7F | C132 | B- 11C | CN8 | A- 13J |
| IC39 | A- 3E | R33 | B- 5E | R115 | B- 4B | R197 | B- 12D | R279 | B- 3E | C51 | B- 5F | C133 | B- 11C | CN9 | A- 14I |
| IC40 | A- 3E | R34 | B- 4E | R116 | B- 4B | R198 | B- 11D | R280 | B- 3F | C52 | B- 5G | C134 | B- 11C | CN10 | A- 13E |
| IC41 | A- 2I | R35 | B- 4E | R117 | B- 4B | R199 | B- 11D | R281 | B- 3F | C53 | B- 4G | C135 | B- 9B | CN11 | A- 13D |
| IC42 | A- 8B | R36 | B- 5E | R118 | B- 5B | R200 | B- 11C | R282 | B- 3E | C54 | A- 4G | C136 | B- 10B | CN12 | A- 2B |
| | | R37 | B- 5E | R119 | B- 5B | R201 | B- 11D | R283 | B- 3F | C55 | B- 5F | C137 | B- 11B | CN13 | A- 10A |
| Q1 | B- 9F | R38 | B- 4E | R120 | B- 5B | R202 | B- 12E | R284 | B- 3E | C56 | B- 5G | C138 | B- 10B | CN14 | A- 12A |
| Q2 | B- 4E | R39 | B- 4E | R121 | B- 5A | R203 | B- 12D | R285 | B- 3E | C57 | B- 5G | C139 | B- 10B | CN15 | A- 13C |
| Q3 | B- 4E | R40 | B- 6F | R122 | B- 4A | R204 | B- 12E | R286 | B- 3F | C58 | B- 7E | C140 | B- 9C | CN16 | A- 2E |
| Q4 | B- 9I | R41 | B- 9I | R123 | B- 4A | R205 | B- 12D | R287 | B- 3F | C59 | B- 5E | C141 | A- 9C | CN17 | A- 3F |
| Q5 | A- 8I | R42 | B- 9I | R124 | B- 4A | R206 | B- 11D | R288 | B- 3F | C60 | B- 4E | C142 | B- 3G | | |
| Q6 | B- 10I | R43 | B- 5G | R125 | B- 4A | R207 | B- 11D | R289 | B- 3E | C61 | B- 5E | C143 | B- 1F | X1 | A- 5G |
| Q7 | A- 10I | R44 | B- 5G | R126 | B- 14I | R208 | B- 11E | R290 | B- 3E | C62 | B- 5E | C144 | A- 3G | | |
| Q8 | B- 9K | R45 | B- 9I | R127 | B- 14I | R209 | B- 11D | R291 | A- 2I | C63 | B- 5E | C145 | B- 3I | | |
| Q9 | B- 9K | R46 | B- 9I | R128 | B- 14J | R210 | B- 6E | R292 | B- 13A | C64 | B- 4E | C146 | A- 3I | | |
| Q10 | B- 10K | R47 | B- 9I | R129 | B- 14H | R211 | B- 6E | R293 | B- 8B | C65 | B- 4E | C147 | A- 2G | | |
| Q11 | B- 10K | R48 | B- 4G | R130 | B- 14H | R212 | B- 3C | R294 | B- 8C | C66 | B- 9I | C148 | B- 2G | | |
| Q12 | A- 11K | R49 | B- 5G | R131 | B- 14H | R213 | B- 3C | R295 | B- 2I | C67 | B- 9H | C149 | B- 2G | | |
| Q13 | B- 11K | R50 | B- 4G | R132 | B- 14H | R214 | B- 2C | R296 | B- 1I | C68 | B- 5G | C150 | B- 2G | | |
| Q14 | B- 11K | R51 | B- 4G | R133 | B- 12I | R215 | B- 3C | R297 | B- 1I | C69 | B- 5G | C151 | B- 3E | | |
| Q15 | B- 11K | R52 | B- 5G | R134 | B- 13I | R216 | B- 2B | R298 | B- 1I | C70 | B- 4G | C152 | B- 3E | | |
| Q16 | B- 12K | R53 | B- 9H | R135 | B- 13I | R217 | B- 4D | R299 | B- 1I | C71 | B- 9H | C153 | B- 3E | | |
| Q17 | B- 12K | R54 | B- 9H | R136 | B- 12I | R218 | B- 3D | R300 | B- 2E | C72 | B- 9H | C154 | A- 3D | | |
| Q18 | B- 14J | R55 | B- 10H | R137 | B- 13I | R219 | B- 2C | R301 | B- 3G | C73 | B- 11J | C155 | A- 3E | | |
| Q19 | B- 14H | R56 | B- 10H | R138 | B- 12J | R220 | B- 2C | R302 | B- 5H | C74 | A- 11J | C156 | B- 3E | | |
| Q20 | B- 14H | R57 | B- 10I | R139 | B- 13I | R221 | B- 2C | R303 | B- 7H | C75 | B- 10J | C157 | B- 3E | | |
| Q21 | B- 11A | R58 | B- 9H | R140 | B- 12J | R222 | B- 2C | R304 | B- 4C | C76 | A- 10J | C158 | B- 3E | | |
| Q22 | B- 10B | R59 | B- 9H | R141 | B- 12J | R223 | B- 3C | R305 | B- 4B | C77 | B- 9D | C159 | B- 1I | | |
| Q23 | B- 2G | R60 | B- 6G | R142 | B- 11J | R224 | B- 3C | R306 | A- 12J | C78 | B- 9E | C160 | B- 1I | | |
| Q24 | B- 2G | R61 | B- 9K | R143 | B- 12J | R225 | B- 3C | | | C79 | A- 14I | C161 | B- 1G | | |
| Q25 | A- 3H | R62 | B- 9K | R144 | B- 12I | R226 | B- 14B | VR1 | A- 14C | C80 | B- 12H | C162 | A- 1G | | |
| Q26 | B- 3I | R63 | A- 9K | R145 | B- 12I | R227 | B- 3C | VR2 | A- 14B | C81 | B- 12I | C163 | A- 1F | | |
| Q27 | B- 3F | R64 | A- 8K | R146 | B- 11I | R228 | B- 2E | | | C82 | A- 11H | C164 | A- 2F | | |
| Q28 | B- 3E | R65 | B- 10K | R147 | B- 11H | R229 | B- 2C | C1 | A- 7J | C83 | B- 12I | C165 | A- 1F | | |
| Q29 | B- 4C | R66 | B- 10K | R148 | B- 12I | R230 | B- 2C | C2 | A- 6J | C84 | B- 13J | C166 | B- 13A | | |
| | | R67 | B- 11K | R149 | B- 11G | R231 | B- 2E | C3 | A- 6J | C85 | A- 13J | C167 | B- 13A | | |
| D1 | B- 6E | R68 | B- 11J | R150 | B- 11G | R232 | B- 2D | C4 | A- 2K | C86 | B- 12H | C168 | B- 12A | | |
| D2 | B- 10I | R69 | B- 12K | R151 | B- 10G | R233 | B- 4C | C5 | A- 6J | C87 | A- 12H | C169 | B- 12A | | |
| D3 | B- 10K | R70 | B- 12K | R152 | B- 12F | R234 | B- 4C | C6 | A- 5J | C88 | B- 11F | C170 | A- 12B | | |
| D4 | B- 10K | R71 | B- 12K | R153 | B- 12G | R235 | B- 4C | C7 | A- 5J | C89 | B- 11F | C171 | B- 12B | | |
| D5 | B- 11K | R72 | B- 12K | R154 | B- 11F | R236 | B- 10B | C8 | A- 8J | C90 | B- 10F | C172 | B- 8B | | |
| D6 | B- 12K | R73 | B- 6B | R155 | B- 12F | R237 | B- 10B | C9 | A- 8J | C91 | B- 11F | C173 | B- 8C | | |
| D7 | B- 14J | R74 | B- 6B | R156 | B- 12F | R238 | B- 11B | C10 | A- 7J | C92 | B- 14F | C174 | B- 2H | | |
| D8 | B- 2C | R75 | B- 6B | R157 | B- 12G | R239 | B- 10B | C11 | B- 9F | C93 | B- 12F | C175 | A- 12J | | |
| D9 | B- 2C | R76 | B- 5A | R158 | B- 10F | R240 | B- 11C | C12 | B- 8G | C94 | B- 12G | | | | |

# MAIN WAVE FORMS OF "M-CTL/SERVO" CIRCUIT

<table>
<tr><th>TP2</th><th colspan="2">TP3</th><th colspan="2">TP4,TP5</th></tr>
<tr>
<td> <br>[REC]<br>5Vp-p/75Hz</td>
<td> <br>[REC]<br>0.6Vp-p/30Hz</td>
<td> 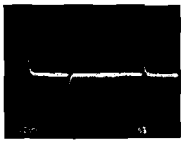 <br>[PB]<br>0.7Vp-p/30Hz</td>
<td> <br>[REC]<br>4.5Vp-p</td>
<td>TP5<br>TP4<br> <br>[REC]</td>
</tr>
<tr><th colspan="3">TP6,TP7</th><th colspan="2">TP8,TP9</th></tr>
<tr>
<td> <br>[REC]<br>4.5Vp-p</td>
<td colspan="2">TP7<br>TP6<br> <br>[REC]</td>
<td> <br>[REC]<br>4.8Vp-p</td>
<td>TP9<br>TP8<br> </td>
</tr>
<tr><th>TP14</th></tr>
<tr><td> <br>[REC]<br>5Vp-p</td></tr>
</table>

## 4.44 M-CTL/SERVO CIRCUIT BOARD

— SIDE A —

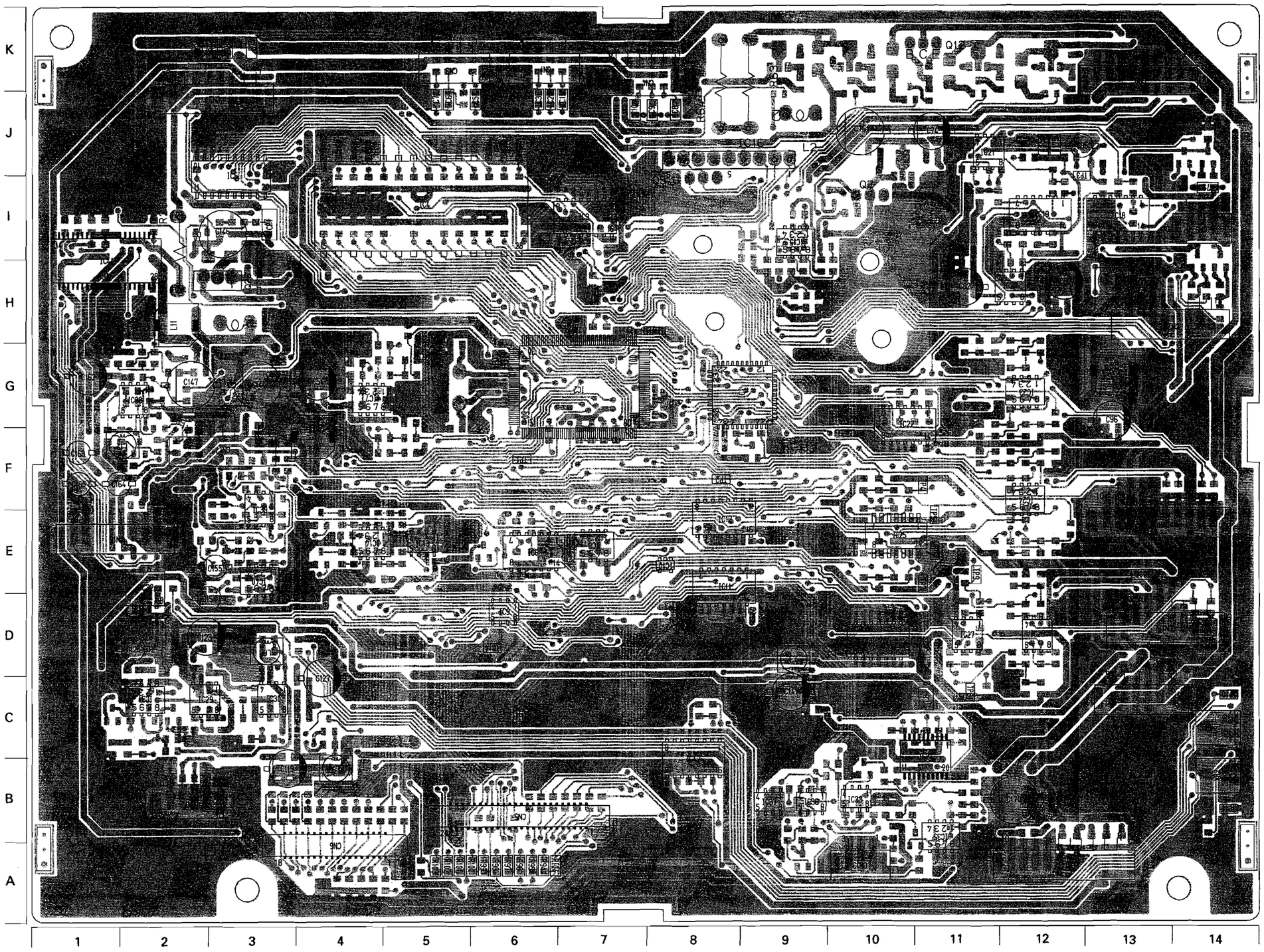



4-93

— SIDE B —

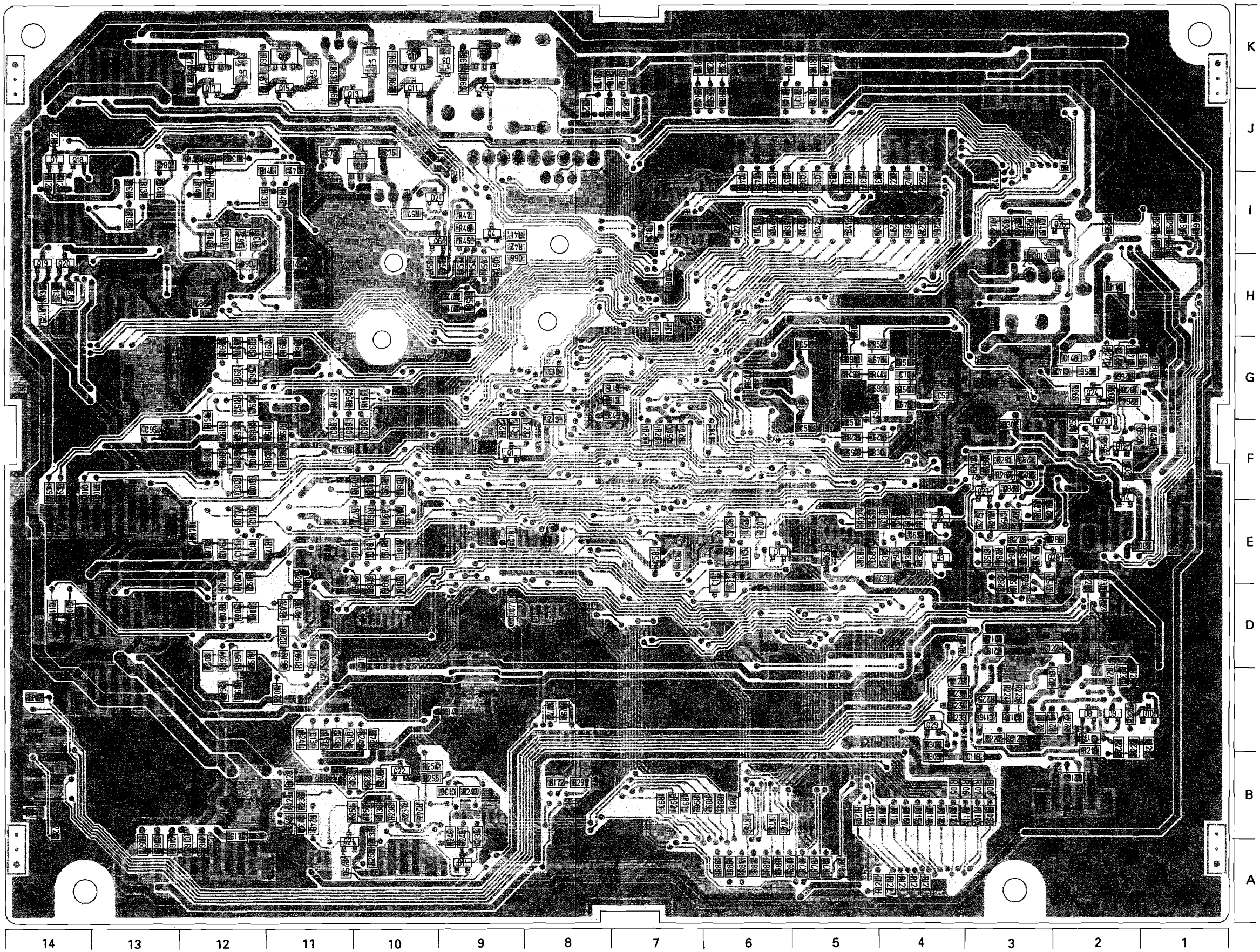


4-94 4-94

## 4.46 SYS/TC CIRCUIT BOARD

— SIDE A —

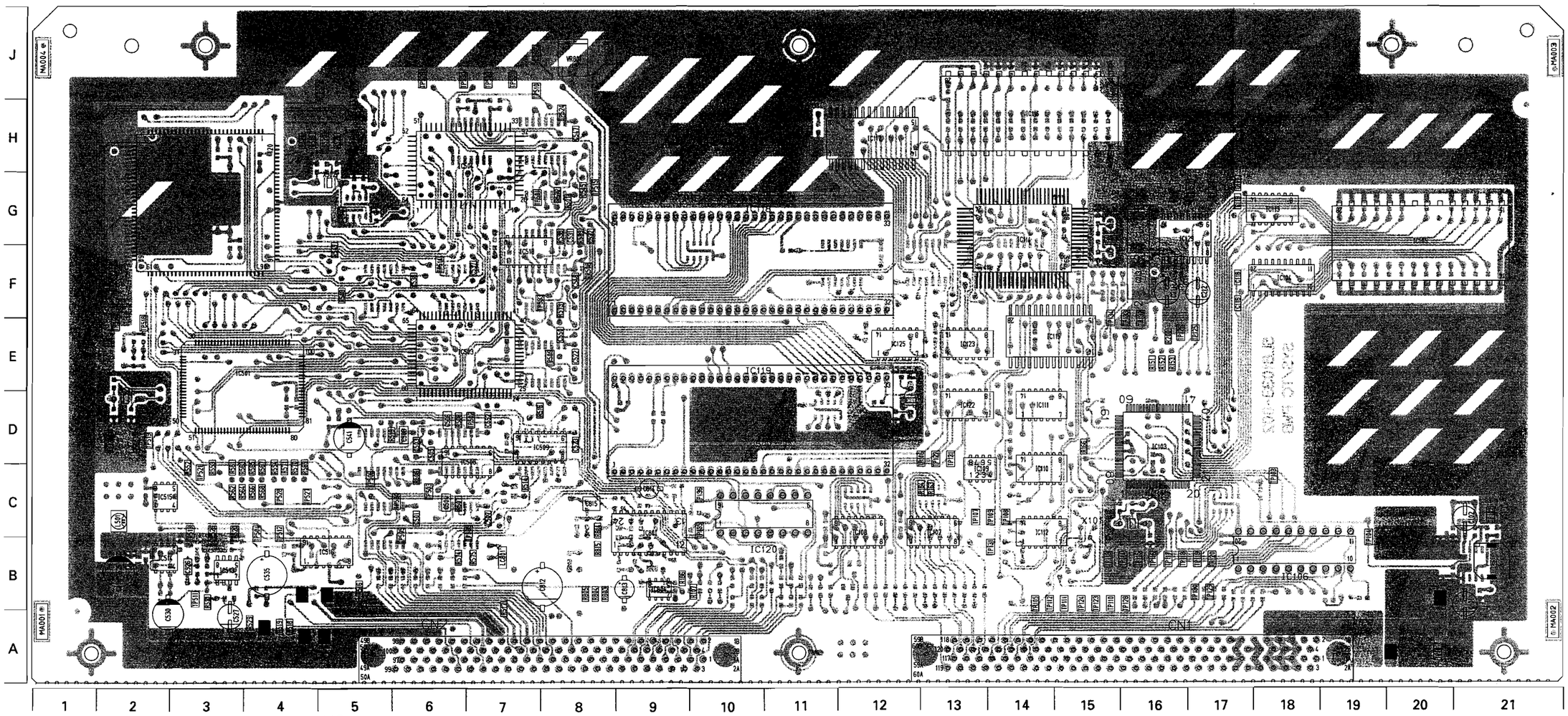


### ● ADDRESS TABLE OF BOARD PARTS

Side — A-1C (A-1C: Y axis, X axis)

Each address may have an address error by one interval.

| | | | | | | | | | | | | | | | | | | | |
|---|---|---|---|---|---|---|---|---|---|---|---|---|---|---|---|---|---|---|---|
| IC101 B- 20C | IC124 B- 13F | IC519 B- 8G | R107 A- 10C | R129 B- 16C | R151 A- 16E | R177 B- 11C | R504 B- 6C | R526 B- 4H | R548 A- 5F | R570 A- 4D | R815 A- 8C | C124 B- 21G | C146 B- 14C | C168 B- 14H | C190 B- 15J |
| IC103 A- 16D | IC125 A- 12E | IC520 B- 7H | R108 B- 10C | R130 B- 16C | R152 A- 16E | R178 B- 11B | R505 B- 6C | R527 B- 3C | R549 B- 2F | R571 A- 4D | | C125 B- 20G | C147 B- 17C | C169 B- 14H | C191 B- 13E |
| IC104 A- 17F | IC126 B- 12F | IC521 B- 8H | R109 B- 10B | R131 B- 16C | R153 A- 16E | R179 B- 11C | R506 A- 6D | R528 B- 3C | R550 B- 2E | R572 A- 8G | VR801 A- 8J | C126 B- 20G | C148 B- 14E | C170 B- 14H | C192 B- 12G |
| IC105 A- 18G | IC129 A- 16G | IC522 B- 6F | R110 B- 10C | R132 B- 16C | R154 B- 15D | R180 B- 11C | R507 A- 6D | R529 A- 3B | R551 B- 2E | R573 A- 8F | | C127 B- 20G | C149 B- 12C | C171 B- 14H | C193 B- 9G |
| IC106 A- 17C | IC501 A- 3E | IC523 B- 7F | R111 B- 11C | R133 B- 14C | R155 B- 15D | R181 B- 11B | R508 A- 6E | R530 B- 3C | R552 A- 3D | R574 A- 6C | C101 A- 20B | C128 B- 20G | C150 B- 11C | C172 B- 14H | C194 B- 11H |
| IC107 A- 12C | IC502 A- 3G | IC524 B- 5G | R112 B- 10B | R134 B- 13C | R156 B- 16C | R182 B- 11B | R509 B- 6C | R531 A- 3B | R553 A- 3D | R575 A- 7C | C102 A- 20C | C129 B- 19G | C151 B- 13D | C173 B- 14H | C195 B- 11G |
| IC108 A- 11C | IC503 A- 6E | IC801 A- 8C | R113 B- 10C | R135 B- 13C | R161 B- 17G | R183 B- 11C | R510 B- 6C | R532 B- 3C | R554 A- 4D | R576 B- 7E | C105 B- 20B | C130 B- 19G | C152 B- 15F | C174 B- 13H | C196 B- 12E |
| IC109 A- 13D | IC504 A- 6H | IC804 A- 9C | R114 B- 10C | R136 B- 13C | R162 B- 16D | R184 B- 8D | R511 B- 5C | R533 B- 2B | R555 B- 5E | R577 B- 8F | C106 B- 20C | C131 B- 20G | C153 B- 15G | C175 B- 14J | C197 B- 12E |
| IC110 A- 14D | IC505 B- 6C | | R115 B- 10C | R137 B- 13C | R163 A- 13D | R185 B- 8D | R512 B- 5C | R534 B- 2B | R556 B- 4E | R578 B- 8G | C109 B- 20C | C132 B- 19G | C154 B- 15G | C176 B- 14J | C198 B- 9E |
| IC111 A- 14E | IC506 B- 7C | Q501 B- 4C | R116 B- 10C | R138 B- 13C | R164 A- 13D | R186 A- 9C | R513 A- 5D | R535 B- 2C | R557 B- 2F | R579 B- 7H | C111 B- 20C | C133 B- 19F | C155 B- 15F | C177 B- 14J | C199 B- 10C |
| IC112 A- 14C | IC507 B- 6D | Q502 B- 5C | R117 B- 10C | R139 B- 13C | R165 B- 14C | R187 B- 9D | R514 A- 7D | R536 B- 3C | R558 B- 4E | R580 B- 6D | C112 B- 16C | C134 B- 19G | C156 B- 15G | C178 B- 14J | C211 A- 16F |
| IC113 A- 17G | IC508 A- 6D | | R118 B- 16C | R140 B- 13C | R166 A- 15D | R188 B- 9D | R515 A- 7E | R537 B- 7G | R559 B- 2E | R803 A- 8C | C113 B- 15D | C135 B- 19G | C157 B- 15F | C179 B- 13H | C212 A- 16F |
| IC114 A- 14G | IC509 A- 7D | D101 B- 12C | R119 B- 17B | R141 B- 12C | R167 B- 15D | R189 B- 9D | R516 A- 5C | R538 A- 8G | R560 A- 2D | R804 A- 8C | C114 B- 16E | C136 B- 18F | C158 B- 15F | C180 B- 13J | C213 A- 16F |
| IC115 A- 14F | IC510 B- 7D | D102 B- 12C | R120 B- 17B | R142 B- 12C | R168 B- 15E | R190 B- 9D | R517 A- 7B | R539 A- 8G | R561 A- 3D | R805 A- 8C | C115 B- 16D | C137 B- 20F | C159 B- 15F | C181 B- 13J | C214 A- 16G |
| IC116 A- 13H | IC511 B- 8E | D501 B- 3C | R121 B- 17B | R143 B- 12C | R169 B- 14D | R196 B- 12C | R518 A- 4B | R540 B- 6H | R562 A- 3D | R806 B- 8C | C116 A- 17F | C138 B- 20F | C160 B- 13F | C182 B- 13H | C215 A- 16G |
| IC117 A- 11H | IC512 B- 8D | | R122 B- 17B | R144 B- 11C | R170 B- 15F | R197 B- 11C | R519 A- 4B | R541 B- 3C | R563 A- 3D | R808 B- 9C | C117 A- 17G | C139 B- 20F | C161 B- 12F | C183 B- 15H | C501 A- 6C |
| IC118 A- 8F | IC513 A- 3C | R101 B- 20C | R123 B- 17C | R145 B- 11C | R171 B- 14G | R198 B- 10B | R520 B- 3H | R542 B- 3C | R564 A- 3D | R809 B- 9C | C118 A- 17F | C140 B- 19F | C162 B- 14G | C184 B- 15H | C502 B- 6D |
| IC119 A- 8D | IC514 A- 2C | R102 B- 21C | R124 B- 17C | R146 B- 11C | R172 B- 15G | R199 B- 12C | R521 B- 3G | R543 B- 4C | R565 A- 3D | R810 B- 9C | C119 A- 17G | C141 B- 19F | C163 B- 13G | C185 B- 15H | C503 A- 6D |
| IC120 A- 10C | IC515 A- 2D | R103 B- 17D | R125 B- 19B | R147 B- 14D | R173 B- 12E | R200 A- 16F | R522 B- 3G | R544 B- 4C | R566 A- 3D | R811 B- 8C | C120 B- 18G | C142 B- 19F | C164 B- 15G | C186 B- 15H | C504 A- 6D |
| IC121 B- 14F | IC516 A- 4C | R104 B- 15E | R126 B- 18B | R148 B- 15C | R174 B- 9E | R501 A- 8G | R523 B- 4H | R545 B- 4C | R567 A- 4D | R812 B- 8D | C121 B- 20F | C143 B- 19F | C165 B- 14F | C187 B- 15J | C505 A- 6D |
| IC122 A- 13E | IC517 B- 8F | R105 B- 20C | R127 B- 17C | R149 B- 15C | R175 B- 9E | R502 B- 6C | R524 A- 4H | R546 B- 2D | R568 A- 4D | R813 B- 8C | C122 B- 20F | C144 B- 19F | C166 B- 13H | C188 B- 15J | C506 A- 6E |
| IC123 A- 13E | IC518 A- 7G | R106 B- 11C | R128 B- 16C | R150 B- 15D | R176 B- 10C | R503 B- 6C | R525 A- 5H | R547 A- 5G | R569 A- 4D | R814 A- 8C | C123 B- 20F | C145 B- 14D | C167 B- 15H | C189 B- 15J | C507 A- 7C |


4-97

— SIDE B —

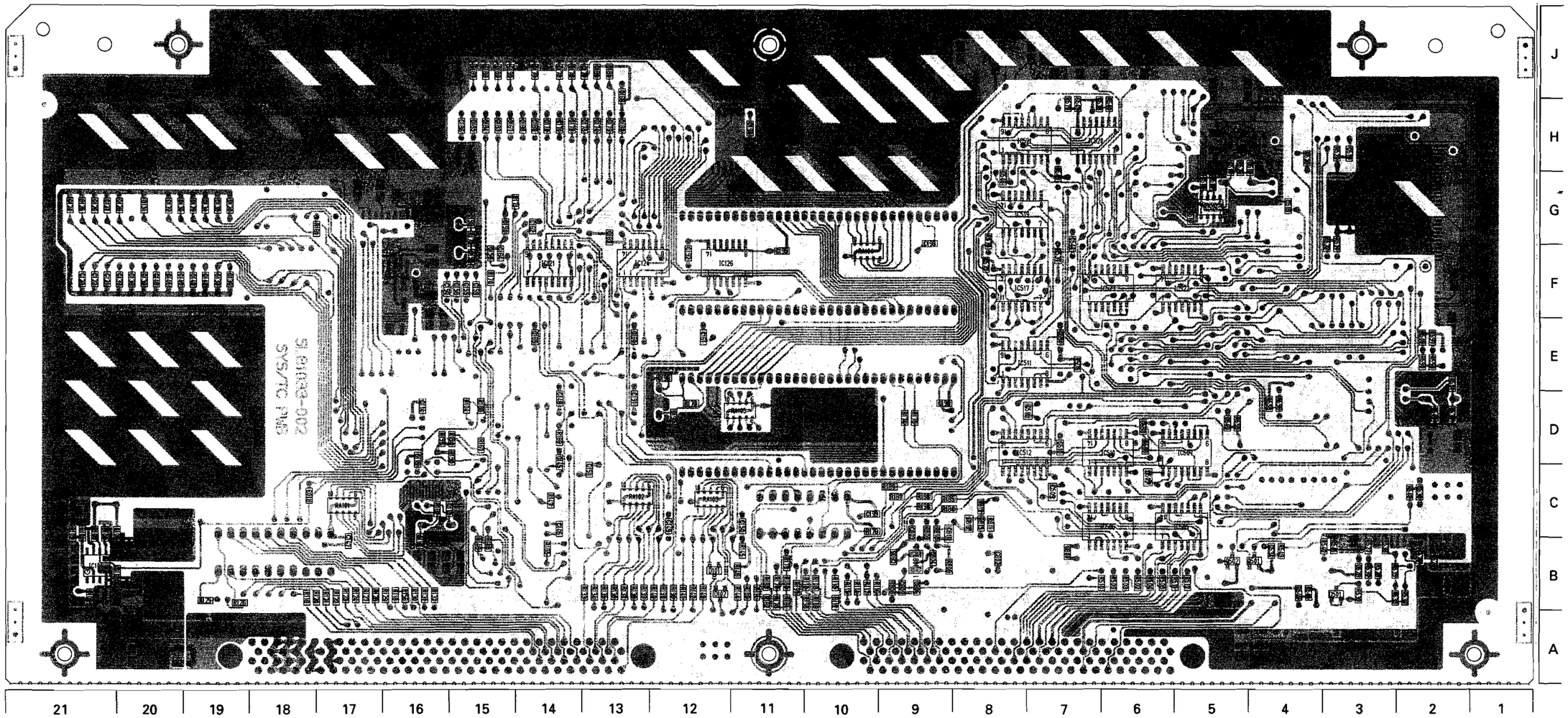


| | | | | | | | | | | | |
|---|---|---|---|---|---|---|---|---|---|---|---|
| C508 A- 6D | C530 A- 2B | C552 A- 7E | TP103 A- 18D | TP125 A- 16F | TP510 A- 7H | TP532 A- 2F | | | | | |
| C509 B- 7D | C531 A- 8G | C553 B- 6E | TP104 A- 19C | TP126 A- 16F | TP511 A- 3B | TP533 A- 7F | CN1 A- 16A | | | | |
| C510 B- 7D | C532 A- 8G | C801 B- 7C | TP105 A- 14B | TP128 A- 15B | TP512 A- 4C | TP534 A- 5D | CN2 A- 8A | | | | |
| C511 B- 7E | C533 B- 6H | C802 B- 8C | TP106 A- 13D | TP129 A- 17C | TP513 A- 3C | TP535 A- 6C | | | | | |
| C512 B- 3H | C534 B- 4C | C803 B- 9C | TP107 A- 13C | TP130 A- 16C | TP514 A- 6F | TP801 A- 8J | X101 A- 15C | | | | |
| C513 B- 4G | C535 A- 4C | C804 B- 9C | TP108 A- 14C | TP131 A- 14C | TP515 A- 8G | TP802 A- 7J | X102 A- 15G | | | | |
| C514 B- 5G | C536 B- 2D | C805 B- 9C | TP109 A- 14C | TP132 A- 16F | TP516 A- 2F | | X103 A- 12E | | | | |
| C515 B- 5G | C537 A- 7F | C806 B- 9C | TP110 A- 15B | TP133 A- 15F | TP517 A- 5J | K101 A- 20B | X501 A- 2E | | | | |
| C516 B- 5G | C538 A- 6F | C809 B- 9C | TP111 A- 15B | TP134 A- 15F | TP518 A- 2F | K103 A- 19B | X502 A- 4G | | | | |
| C517 B- 5H | C539 B- 2E | C810 B- 8C | TP112 A- 14B | TP135 A- 10C | TP519 A- 2D | K501 A- 4B | | | | | |
| C518 B- 4H | C540 B- 2E | C811 B- 8C | TP113 A- 15C | TP136 A- 10D | TP520 A- 3C | K502 A- 4B | | | | | |
| C519 A- 4H | C541 A- 5D | C812 A- 7C | TP114 A- 15C | TP137 A- 16G | TP521 A- 3D | K503 A- 4B | | | | | |
| C520 A- 4H | C542 B- 5E | C813 A- 9C | TP115 A- 16C | TP138 A- 17G | TP522 A- 4J | K504 A- 4C | | | | | |
| C521 A- 5H | C543 B- 7G | C814 A- 9D | TP116 A- 16C | TP501 A- 7G | TP523 A- 7J | K505 A- 4C | | | | | |
| C522 A- 8E | C544 B- 7G | C815 A- 8D | TP117 A- 16C | TP502 A- 6E | TP524 A- 8H | | | | | | |
| C523 A- 8D | C545 A- 8G | | TP118 A- 16C | TP503 A- 6D | TP525 A- 2D | LC801 A- 7C | | | | | |
| C524 B- 2C | C546 B- 8G | L101 A- 20C | TP119 A- 16C | TP504 A- 4C | TP526 A- 6J | | | | | | |
| C525 A- 2C | C547 A- 8H | L501 A- 2C | TP120 A- 17C | TP505 A- 6C | TP527 A- 4D | RA101 B- 17D | | | | | |
| C526 A- 3C | C548 A- 8F | L801 B- 9C | TP121 A- 13D | TP506 A- 5D | TP528 A- 4D | RA102 B- 13D | | | | | |
| C527 A- 3B | C549 B- 7H | | TP122 A- 13D | TP507 A- 5G | TP529 A- 3C | RA103 B- 12D | | | | | |
| C528 B- 3C | C550 A- 8F | TP101 A- 20B | TP123 A- 15B | TP508 A- 8F | TP530 A- 6J | RA104 B- 10G | | | | | |
| C529 B- 2C | C551 B- 7F | TP102 A- 20C | TP124 A- 15B | TP509 A- 8E | TP531 A- 7J | RA105 B- 11E | | | | | |

## 4.47 OPERATION SCHEMATIC DIAGRAM

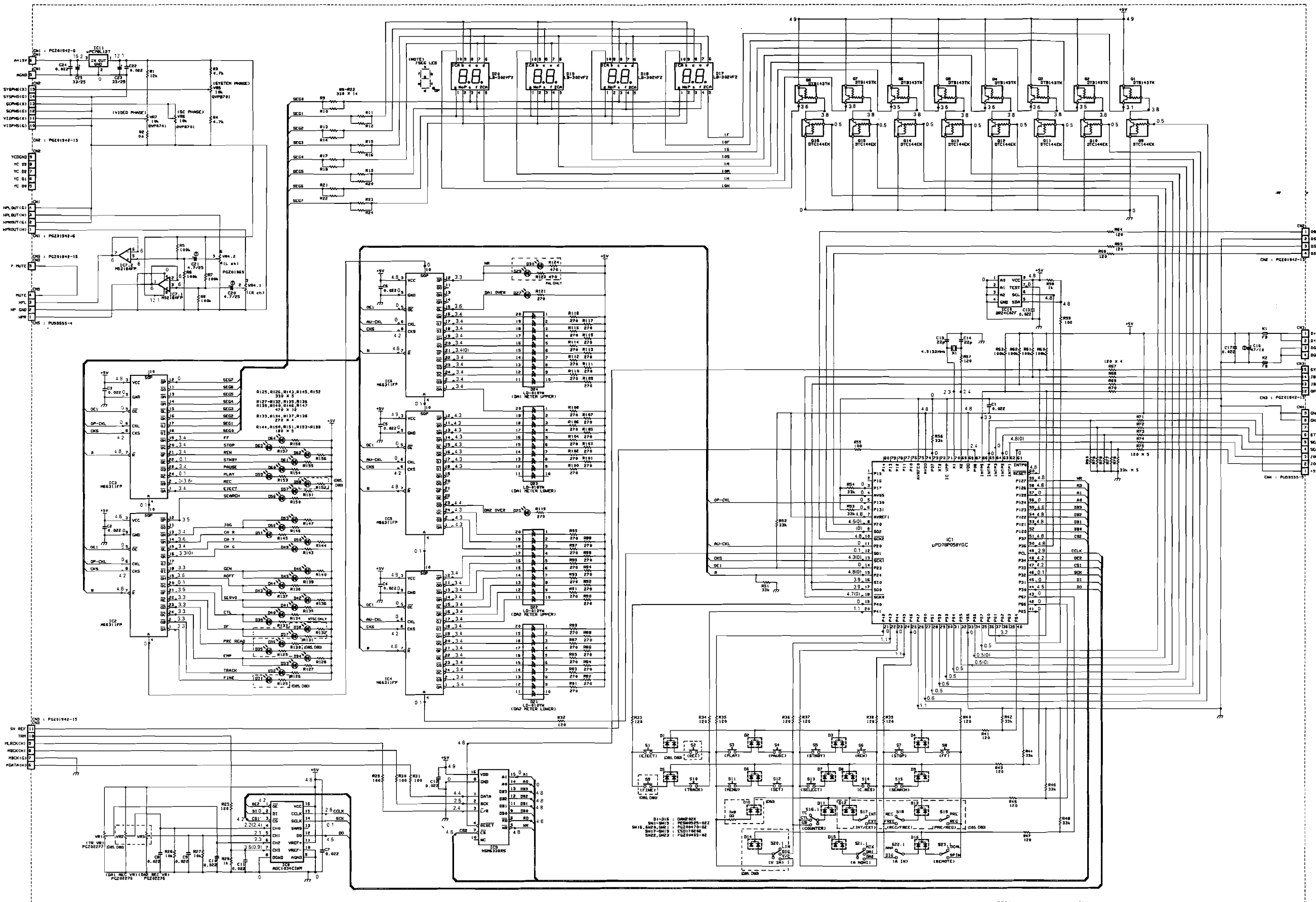

## 4.48 OPERATION CIRCUIT BOARD

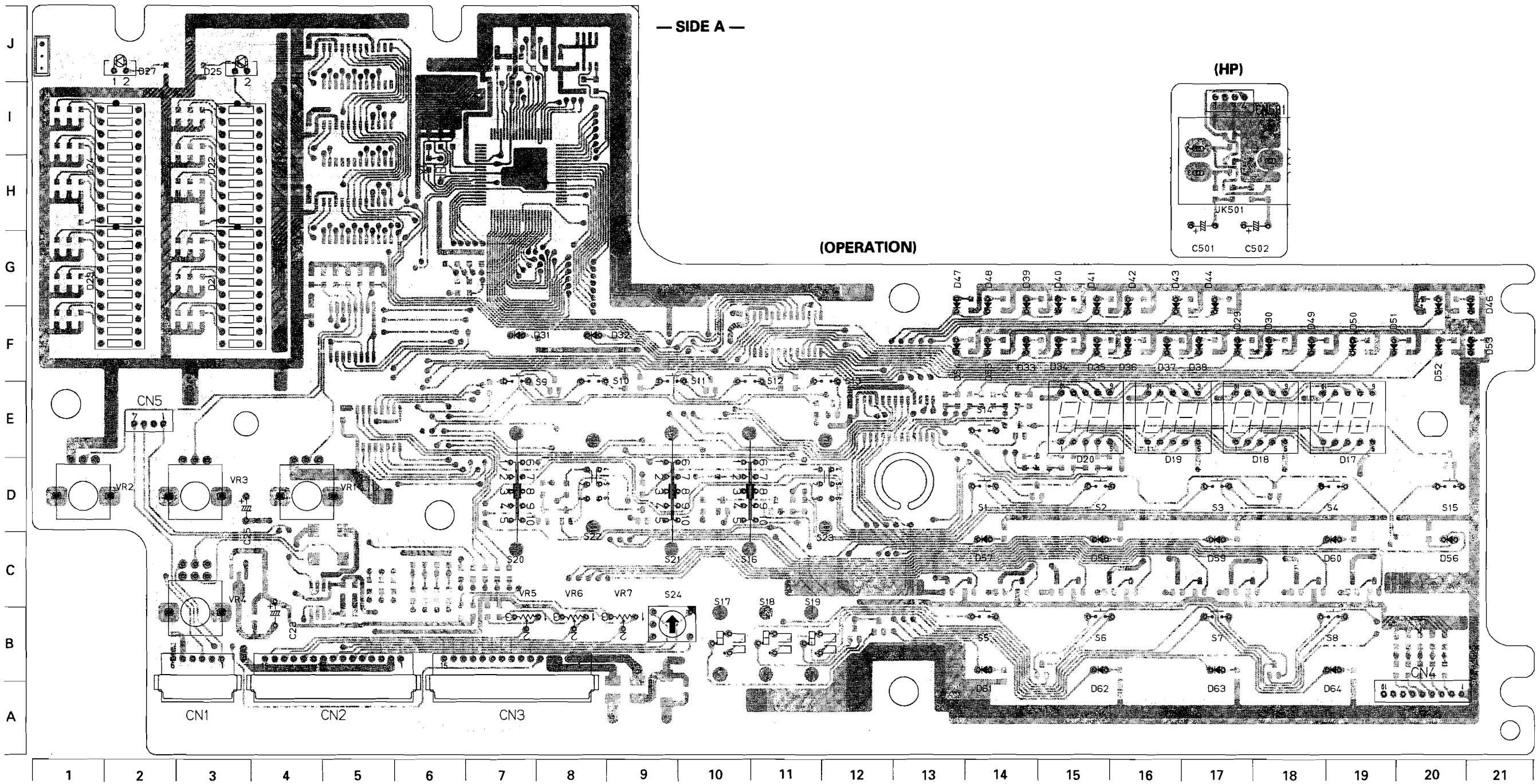


### ● ADDRESS TABLE OF BOARD PARTS

Side — A-1C (Y axis, X axis)

Each address may have an address error by one interval.

| | | | | | | | | | | | | | | | | | | | | | | | |
|---|---|---|---|---|---|---|---|---|---|---|---|---|---|---|---|---|---|---|---|---|---|---|---|
| IC1 | B- 7H | Q7 | B- 14C | D8 | B- 14E | D27 | A- 2J | D46 | A- 21F | D64 | A- 19B | R17 | B- 14E | R35 | B- 9E | R53 | B- 7J | R71 | B- 20B | R89 | B- 3G | R107 | B- 1G | R127 | B- 15F | R145 | B- 20F |
| IC2 | B- 11F | Q8 | B- 13C | D9 | B- 20D | D29 | A- 17F | D47 | A- 13F | | | R18 | B- 14E | R36 | B- 11E | R54 | B- 7J | R72 | B- 20B | R90 | B- 3H | R108 | B- 1G | R128 | B- 15F | R146 | B- 20F |
| IC3 | B- 12E | Q9 | B- 19C | D10 | B- 11D | D30 | A- 18F | D48 | A- 14F | R1 | B- 7B | R19 | B- 15D | R37 | B- 11E | R55 | B- 6C | R73 | B- 20B | R91 | B- 3H | R109 | B- 1H | R129 | B- 16F | R147 | B- 21F |
| IC4 | B- 5H | Q10 | B- 18C | D11 | B- 10D | D31 | A- 7F | D49 | A- 18F | R2 | B- 7B | R20 | B- 16D | R38 | B- 9D | R56 | B- 6I | R74 | B- 20B | R92 | B- 3H | R110 | B- 1H | R130 | B- 16F | R148 | B- 14F |
| IC5 | B- 5I | Q11 | B- 18C | D12 | B- 12B | D32 | A- 8F | D50 | A- 19F | R3 | B- 6B | R21 | B- 14D | R39 | B- 8D | R57 | B- 6H | R75 | B- 20B | R93 | B- 3H | R111 | B- 1H | R131 | B- 17F | R149 | B- 14F |
| IC6 | B- 5J | Q12 | B- 17C | D13 | B- 12B | D33 | A- 14F | D51 | A- 20F | R4 | B- 7B | R22 | B- 15D | R40 | B- 11E | R58 | B- 8I | R76 | B- 20B | R94 | B- 3I | R112 | B- 1H | R132 | B- 17F | R150 | B- 20C |
| IC7 | B- 4C | Q13 | B- 16C | D14 | B- 8D | D34 | A- 15F | D52 | A- 20F | R5 | B- 5B | R23 | B- 15D | R41 | B- 6G | R59 | B- 8I | R77 | B- 20B | R95 | B- 3I | R113 | B- 1I | R133 | B- 15G | R151 | B- 14C |
| IC8 | B- 5F | Q14 | B- 15C | D15 | B- 9D | D35 | A- 15F | D53 | A- 21F | R6 | B- 5C | R24 | B- 15D | R42 | B- 6G | R60 | B- 6C | R78 | B- 20B | R96 | B- 3I | R114 | B- 1I | R134 | B- 15G | R152 | B- 16C |
| IC9 | B- 5E | Q15 | B- 14C | D16 | B- 8D | D36 | A- 16F | D54 | A- 13F | R7 | B- 5B | R25 | B- 7C | R43 | B- 7G | R61 | B- 6C | R79 | B- 20B | R97 | B- 3I | R115 | B- 1I | R135 | B- 16G | R153 | B- 17C |
| IC10 | B- 8J | Q16 | B- 14C | D17 | A- 19E | D37 | A- 16F | D55 | A- 14F | R8 | B- 5C | R26 | B- 5G | R44 | B- 6G | R62 | B- 6C | R80 | B- 20B | R98 | B- 3I | R116 | B- 1I | R136 | B- 16G | R154 | B- 19C |
| IC11 | B- 3C | | | D18 | A- 18E | D38 | A- 17F | D56 | A- 20C | R9 | B- 15D | R27 | B- 5G | R45 | B- 10D | R63 | B- 6C | R81 | B- 3F | R99 | B- 3I | R117 | B- 1I | R137 | B- 17G | R155 | B- 14B |
| | | D1 | B- 15D | D19 | A- 16E | D39 | A- 14F | D57 | A- 14C | R10 | B- 15D | R28 | B- 5G | R46 | B- 7G | R64 | B- 6C | R82 | B- 3F | R100 | B- 1F | R118 | B- 1I | R138 | B- 17G | R156 | B- 16B |
| Q1 | B- 19C | D2 | B- 18D | D20 | A- 15E | D40 | A- 15F | D58 | A- 15C | R11 | B- 14E | R29 | B- 7C | R47 | B- 8D | R65 | B- 5C | R83 | B- 3F | R101 | B- 1F | R119 | B- 3J | R139 | B- 20G | R157 | B- 17B |
| Q2 | B- 18C | D3 | B- 15B | D21 | A- 3G | D41 | A- 15F | D59 | A- 17C | R12 | B- 14E | R30 | B- 7C | R48 | B- 7G | R66 | B- 5C | R84 | B- 3G | R102 | B- 1F | R121 | B- 2J | R140 | B- 20G | R158 | B- 19B |
| Q3 | B- 17C | D4 | B- 18B | D22 | A- 3I | D42 | A- 16F | D60 | A- 19C | R13 | B- 14E | R31 | B- 7C | R49 | B- 11D | R67 | B- 6C | R85 | B- 3G | R103 | B- 1G | R123 | B- 18F | R141 | B- 14G | | |
| Q4 | B- 16C | D5 | B- 8E | D23 | A- 1G | D43 | A- 16F | D61 | A- 14B | R14 | B- 14E | R32 | B- 7J | R50 | B- 11D | R68 | B- 6C | R86 | B- 3G | R104 | B- 1G | R124 | B- 18F | R142 | B- 14G | VR1 | A- 4D |
| Q5 | B- 16C | D6 | B- 10E | D24 | A- 1I | D44 | A- 17F | D62 | A- 15B | R15 | B- 13E | R33 | B- 7E | R51 | B- 8J | R69 | B- 6C | R87 | B- 3G | R105 | B- 1G | R125 | B- 8F | R143 | B- 19F | VR2 | A- 1D |
| Q6 | B- 15C | D7 | B- 12E | D25 | A- 3J | D45 | A- 20F | D63 | A- 17B | R16 | B- 13E | R34 | B- 9E | R52 | B- 7J | R70 | B- 6C | R88 | B- 3G | R106 | B- 1G | R126 | B- 9F | R144 | B- 19F | VR3 | A- 3D |

— SIDE B —

(HP)



(OPERATION)

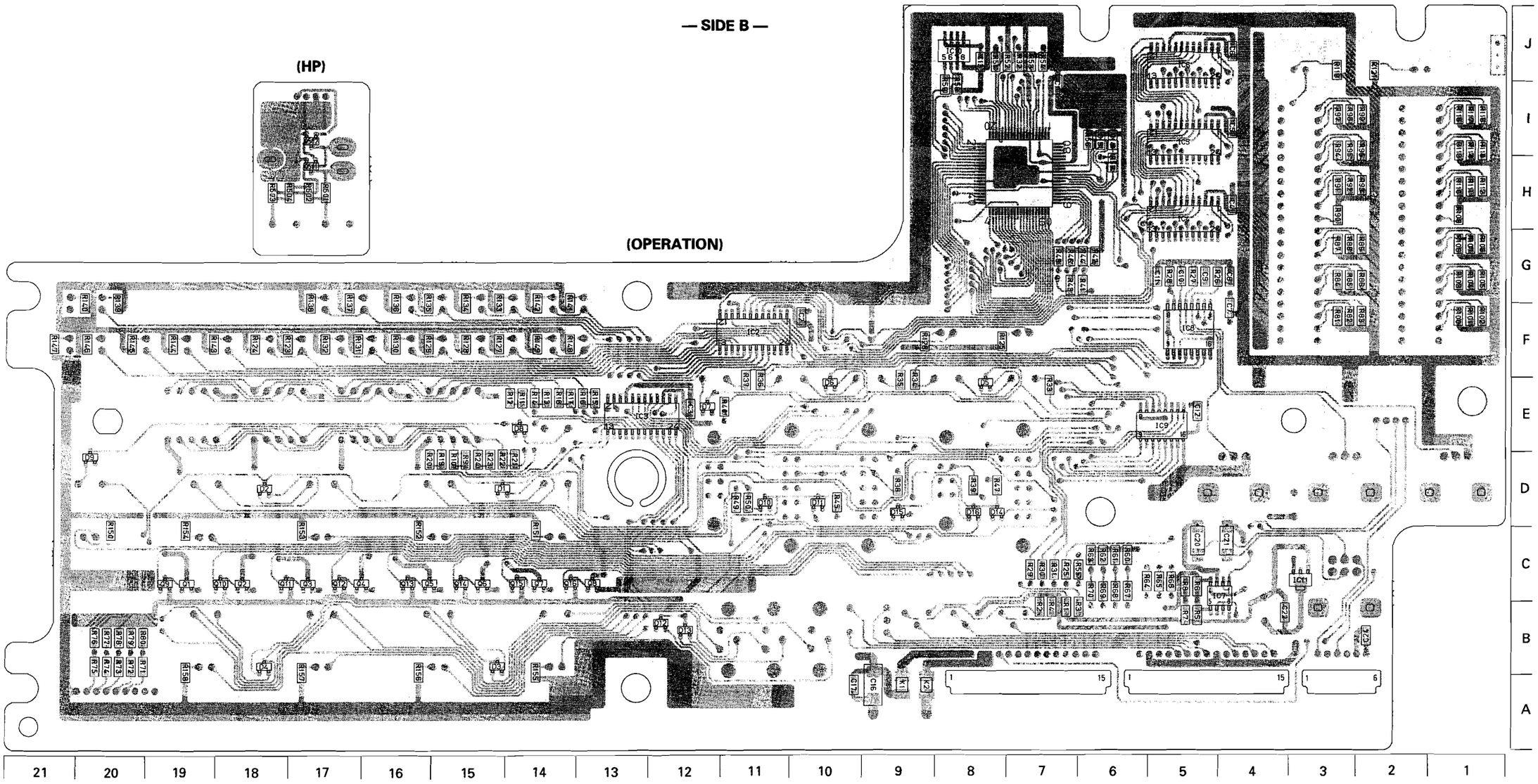


| | | | | | | | |
|---|---|---|---|---|---|---|---|
| VR4 | A- 3B | C14 | B- 6I | K2 | B- 9A | S17 | A- 10B |
| VR5 | A- 8B | C15 | B- 6I | | | S18 | A- 11B |
| VR6 | A- 8B | C16 | B- 9A | S1 | A- 14D | S19 | A- 11B |
| VR7 | A- 9B | C17 | B- 10A | S2 | A- 15D | S20 | A- 7D |
| | | C20 | B- 5C | S3 | A- 17D | S21 | A- 9D |
| C1 | B- 7I | C21 | B- 4C | S4 | A- 19D | S22 | A- 8D |
| C2 | B- 10F | C22 | B- 4B | S5 | A- 14B | S23 | A- 12D |
| C3 | B- 12E | C23 | A- 4C | S6 | A- 15B | S24 | A- 9B |
| C4 | B- 4H | C24 | B- 2B | S7 | A- 17B | | |
| C5 | B- 4I | C25 | A- 3D | S8 | A- 19B | X1 | A- 6H |
| C6 | B- 4J | | | S9 | A- 7E | | |
| C7 | B- 4F | CN1 | A- 3B | S10 | A- 8E | | |
| C8 | B- 4G | CN2 | A- 6B | S11 | A- 9E | | |
| C9 | B- 5G | CN3 | A- 8B | S12 | A- 11E | | |
| C10 | B- 5G | CN4 | A- 20A | S13 | A- 12E | | |
| C11 | B- 5G | CN5 | A- 2E | S14 | A- 14E | | |
| C12 | B- 5E | | | S15 | A- 20D | | |
| C13 | B- 8J | K1 | B- 9A | S16 | A- 11D | | |

## 4.49 REEL MDA SCHEMATIC DIAGRAM

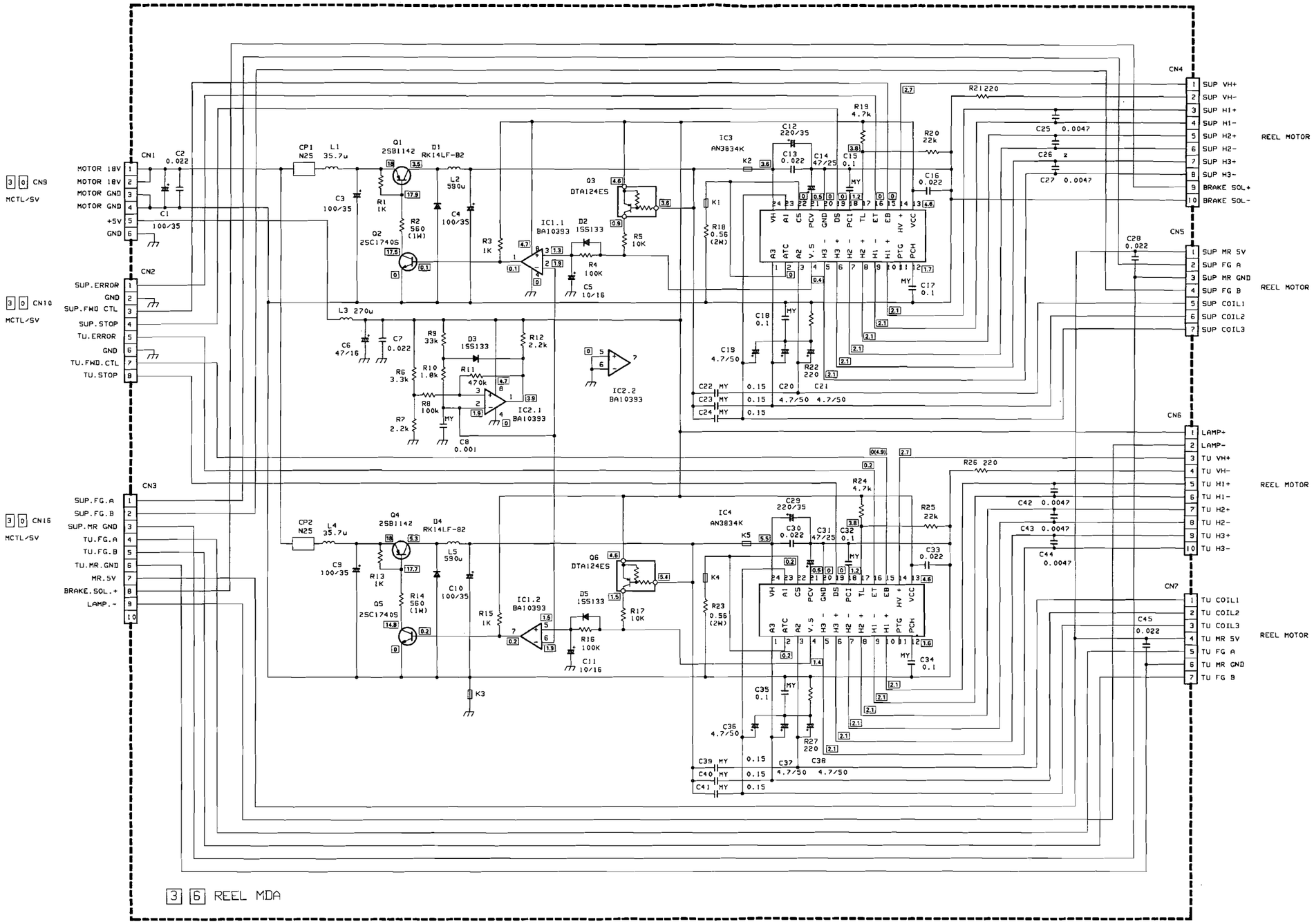


NOTE:UNLESS OTHERWISE SPECIFIED:
ALL RESISTANCE VALUES ARE IN OHMS.(1/6W)
ALL INDUCTANCE VALUES ARE IN H.

ALL CAPACITANCE VALUES ARE IN uF
ELECTROLYTIC
CERAMIC
MYLAR

| | LAST NO. | VACANT NO. |
|---|---|---|
| IC | 4 | |
| Q | 6 | |
| D | 5 | |
| R | 27 | |
| C | 45 | |
| L | 5 | |
| CN | 7 | |


4-102

## 4.50 REEL MDA CIRCUIT BOARD

**— SIDE A —**

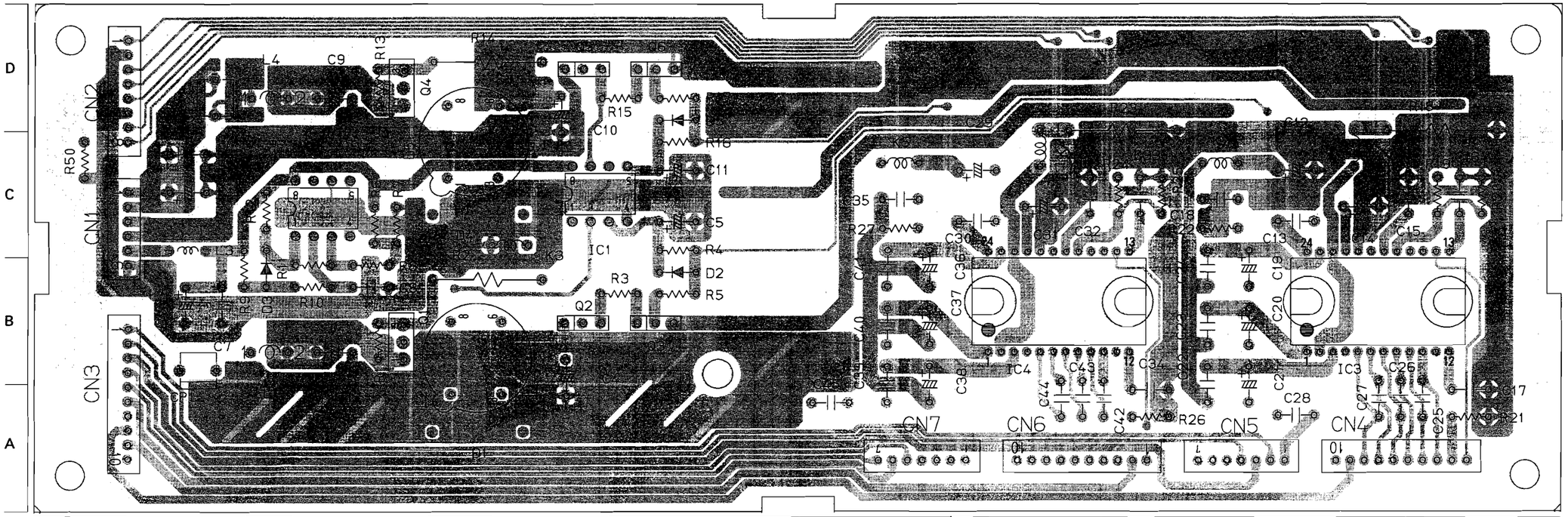


### ● ADDRESS TABLE OF BOARD PARTS

Side — A-1C — Y axis / X axis

Each address may have an address error by one interval.

| | | | | | | | |
|---|---|---|---|---|---|---|---|
| IC1 | A- 4C | R13 | A- 3D | C14 | A- 9C | C44 | A- 7A |
| IC2 | A- 2C | R14 | A- 3D | C15 | A- 10C | C45 | A- 6A |
| IC3 | A- 9B | R15 | A- 4D | C16 | A- 10C | | |
| IC4 | A- 7B | R16 | A- 5C | C17 | A- 10A | L1 | A- 2B |
| | | R17 | A- 5D | C18 | A- 8C | L2 | A- 3B |
| Q1 | A- 3B | R18 | A- 9C | C19 | A- 8C | L3 | A- 1C |
| Q2 | A- 4B | R19 | A- 10C | C20 | A- 8B | L4 | A- 2D |
| Q3 | A- 4B | R20 | A- 10C | C21 | A- 8B | L5 | A- 3C |
| Q4 | A- 3D | R21 | A- 10A | C22 | A- 8B | | |
| Q5 | A- 4D | R22 | A- 8C | C23 | A- 8B | CN1 | A- 1C |
| Q6 | A- 4D | R23 | A- 7C | C24 | A- 8C | CN2 | A- 1D |
| | | R24 | A- 8C | C25 | A- 10A | CN3 | A- 1B |
| D1 | A- 3A | R25 | A- 8C | C26 | A- 9A | CN4 | A- 10A |
| D2 | A- 5B | R26 | A- 8A | C27 | A- 9A | CN5 | A- 9A |
| D3 | A- 2C | R27 | A- 6C | C28 | A- 9A | CN6 | A- 8A |
| D4 | A- 3C | R50 | A- 1C | C29 | A- 7C | CN7 | A- 7A |
| D5 | A- 5D | | | C30 | A- 7C | | |
| | | C1 | A- 1C | C31 | A- 7C | CP1 | A- 1B |
| R1 | A- 3B | C2 | A- 1C | C32 | A- 7C | CP2 | A- 2D |
| R2 | A- 3B | C3 | A- 2B | C33 | A- 8C | | |
| R3 | A- 4B | C4 | A- 4B | C34 | A- 8A | K1 | A- 9C |
| R4 | A- 5C | C5 | A- 5C | C35 | A- 6C | K2 | A- 8C |
| R5 | A- 5B | C6 | A- 2B | C36 | A- 6C | K3 | A- 4C |
| R6 | A- 3C | C7 | A- 2B | C37 | A- 6B | K4 | A- 7C |
| R7 | A- 3C | C8 | A- 3B | C38 | A- 6B | K5 | A- 6C |
| R8 | A- 3B | C9 | A- 2D | C39 | A- 6B | | |
| R9 | A- 2C | C10 | A- 4D | C40 | A- 6B | | |
| R10 | A- 2B | C11 | A- 5C | C41 | A- 6C | | |
| R11 | A- 2B | C12 | A- 9C | C42 | A- 8A | | |
| R12 | A- 2C | C13 | A- 9C | C43 | A- 7A | | |


4-103

## 4.51 REAR(REAR-1, REAR-2) SCHEMATIC DIAGRAMS

### — REAR-1 —

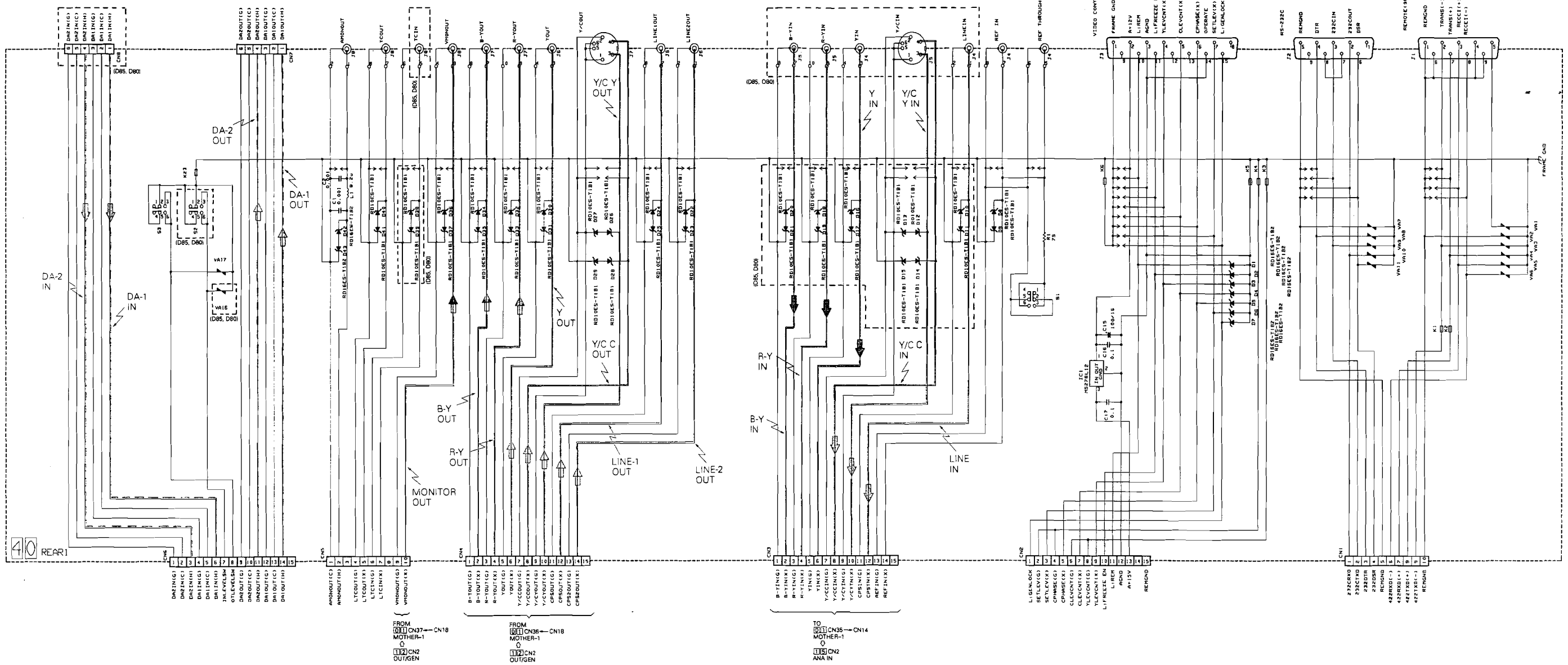

## 4.52 REAR(REAR-1, REAR-2) CIRCUIT BOARDS

— REAR-2 —

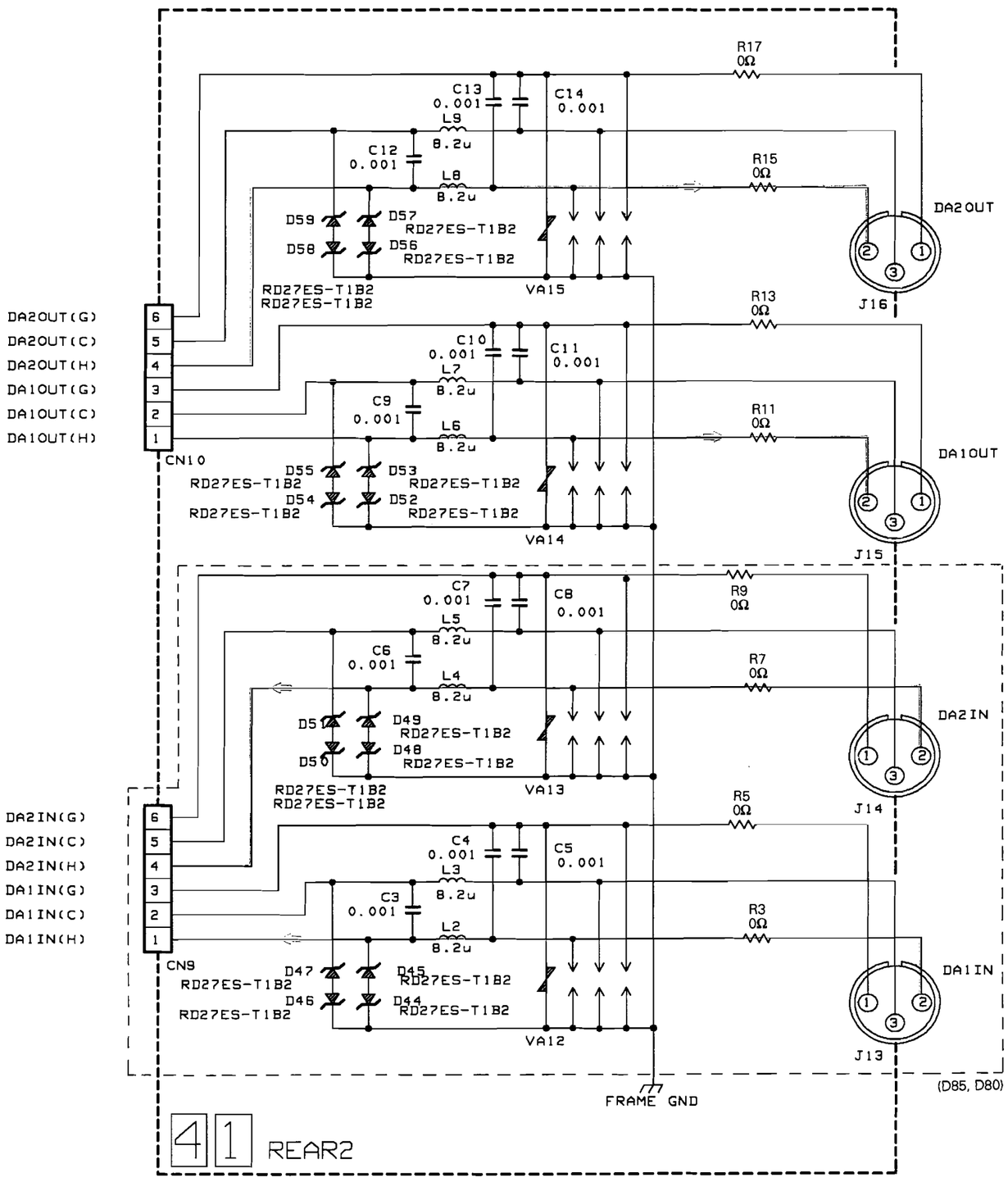


— SIDE A —

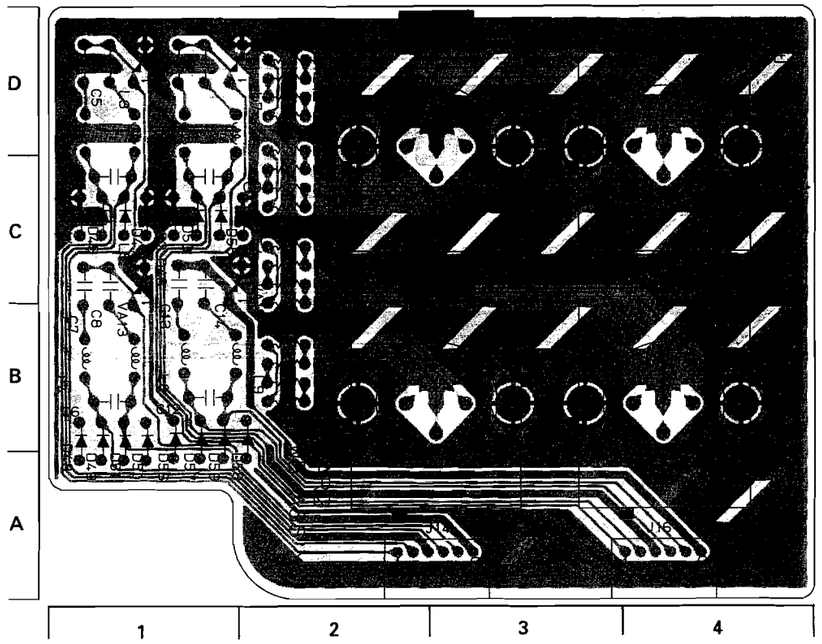


### ● ADDRESS TABLE OF BOARD PARTS

Each address may have an address error by one interval.

Side — A-1C — Y axis / X axis

| | | | | | | | |
|---|---|---|---|---|---|---|---|
| D44 | 1C | R14 | 2C | J13 | 3D | | |
| D45 | 1C | R15 | 2C | J14 | 3B | | |
| D46 | 1C | R16 | 2C | J15 | 4D | | |
| D47 | 1C | R17 | 2B | J16 | 4B | | |
| D48 | 1B | | | | | | |
| D49 | 1B | C3 | 1C | VA12 | 1D | | |
| D50 | 1B | C4 | 1D | VA13 | 1B | | |
| D51 | 1B | C5 | 1D | VA14 | 2D | | |
| D52 | 1C | C6 | 1B | VA15 | 2B | | |
| D53 | 1C | C7 | 1B | | | | |
| D54 | 2C | C8 | 1B | | | | |
| D55 | 2C | C9 | 1C | | | | |
| D56 | 1B | C10 | 1D | | | | |
| D57 | 1B | C11 | 2D | | | | |
| D58 | 2B | C12 | 1B | | | | |
| D59 | 2B | C13 | 1B | | | | |
| | | C14 | 2B | | | | |
| R2 | 2C | | | | | | |
| R3 | 2C | L2 | 1C | | | | |
| R4 | 2C | L3 | 1C | | | | |
| R5 | 2C | L4 | 1B | | | | |
| R6 | 2B | L5 | 1B | | | | |
| R7 | 2B | L6 | 1C | | | | |
| R8 | 2B | L7 | 2C | | | | |
| R9 | 2B | L8 | 1B | | | | |
| R10 | 2D | L9 | 2B | | | | |
| R11 | 2D | | | | | | |
| R12 | 2D | CN9 | 3A | | | | |
| R13 | 2D | CN10 | 4A | | | | |

— REAR-1 —

— SIDE A —

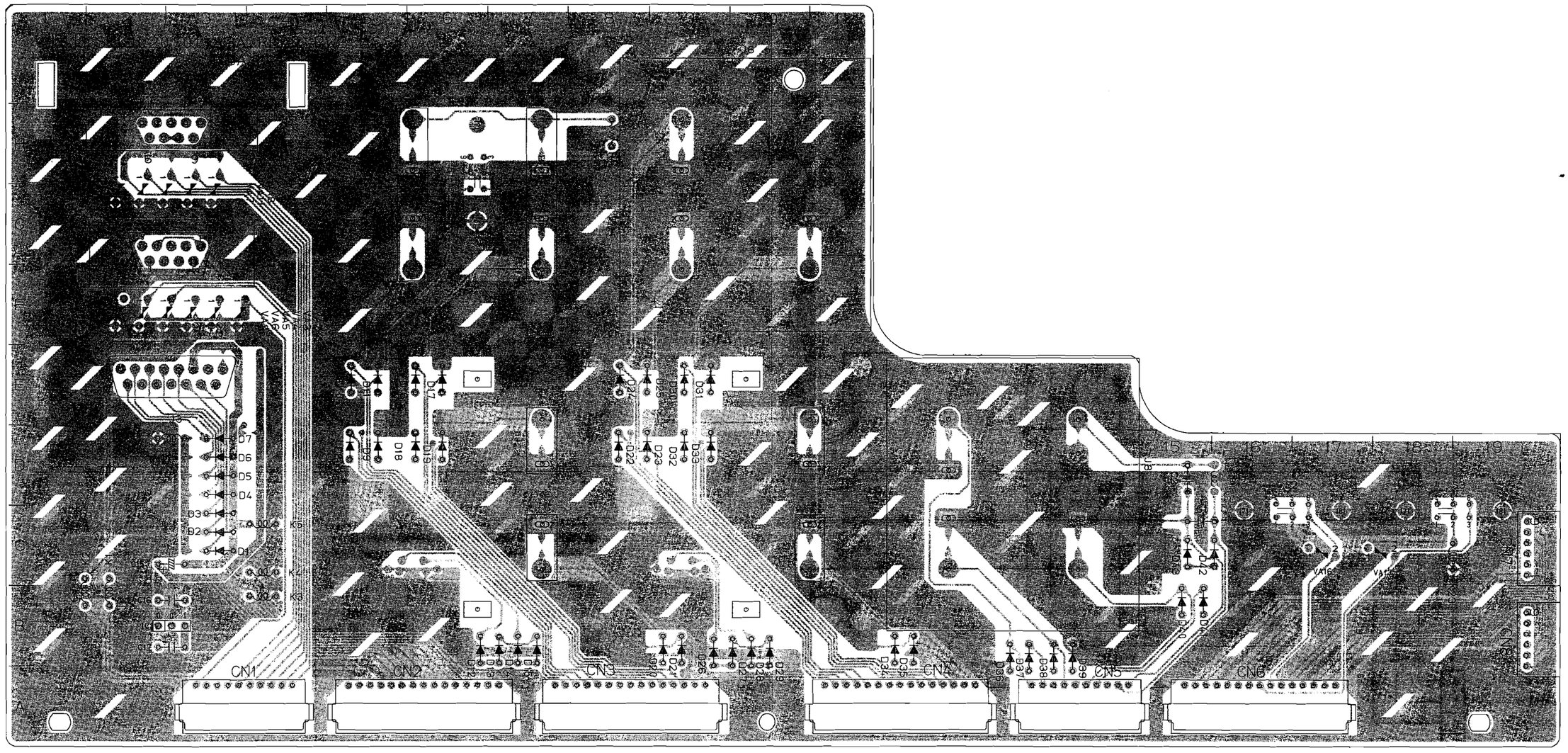


## ● ADDRESS TABLE OF BOARD PARTS

Side — A-1C (Y axis, X axis)

Each address may have an address error by one interval.

| | | | | | | | | | | | | | | | |
|---|---|---|---|---|---|---|---|---|---|---|---|---|---|---|---|
| IC1 | 2B | D15 | 7B | D31 | 9E | C1 | 14C | | | K23 | 17B | VA11 | 2G |
| | | D16 | 5E | D32 | 8D | C2 | 14D | J1 | 2F | | | VA16 | 15C |
| D1 | 3C | D17 | 5E | D33 | 9D | C15 | 2B | J2 | 2G | S1 | 6G | VA17 | 16C |
| D2 | 3C | D18 | 5D | D34 | 11B | C16 | 3B | J3 | 2E | S2 | 15C | | |
| D3 | 3C | D19 | 5D | D35 | 11B | C17 | 3B | J4 | 6F | S3 | 17C | | |
| D4 | 3C | D20 | 8B | D36 | 12B | | | J5 | 6C | | | | |
| D5 | 3C | D21 | 8B | D37 | 12B | L1 | 14C | J6 | 9F | VA1 | 2E | | |
| D6 | 3D | D22 | 7D | D38 | 12B | | | J7 | 9C | VA2 | 3E | | |
| D7 | 3D | D23 | 8D | D39 | 13B | CN1 | 4A | J8 | 12C | VA3 | 3E | | |
| D8 | 4D | D24 | 7E | D40 | 14B | CN2 | 6A | | | VA4 | 3E | | |
| D9 | 5D | D25 | 8E | D41 | 14B | CN3 | 8A | K1 | 2B | VA5 | 2E | | |
| D10 | 4E | D26 | 9B | D42 | 14C | CN4 | 12A | K2 | 1B | VA6 | 2E | | |
| D11 | 5E | D27 | 9B | D43 | 14C | CN5 | 13A | K3 | 4B | VA7 | 2G | | |
| D12 | 6B | D28 | 9B | | | CN6 | 16A | K4 | 4B | VA8 | 2G | | |
| D13 | 6B | D29 | 9B | R1 | 7G | CN7 | 18B | K5 | 4C | VA9 | 3G | | |
| D14 | 6B | D30 | 8E | | | CN8 | 18A | K6 | 2D | VA10 | 3G | | |



4-106

## 4.53 E. SENS/FLY E SCHEMATIC DIAGRAM

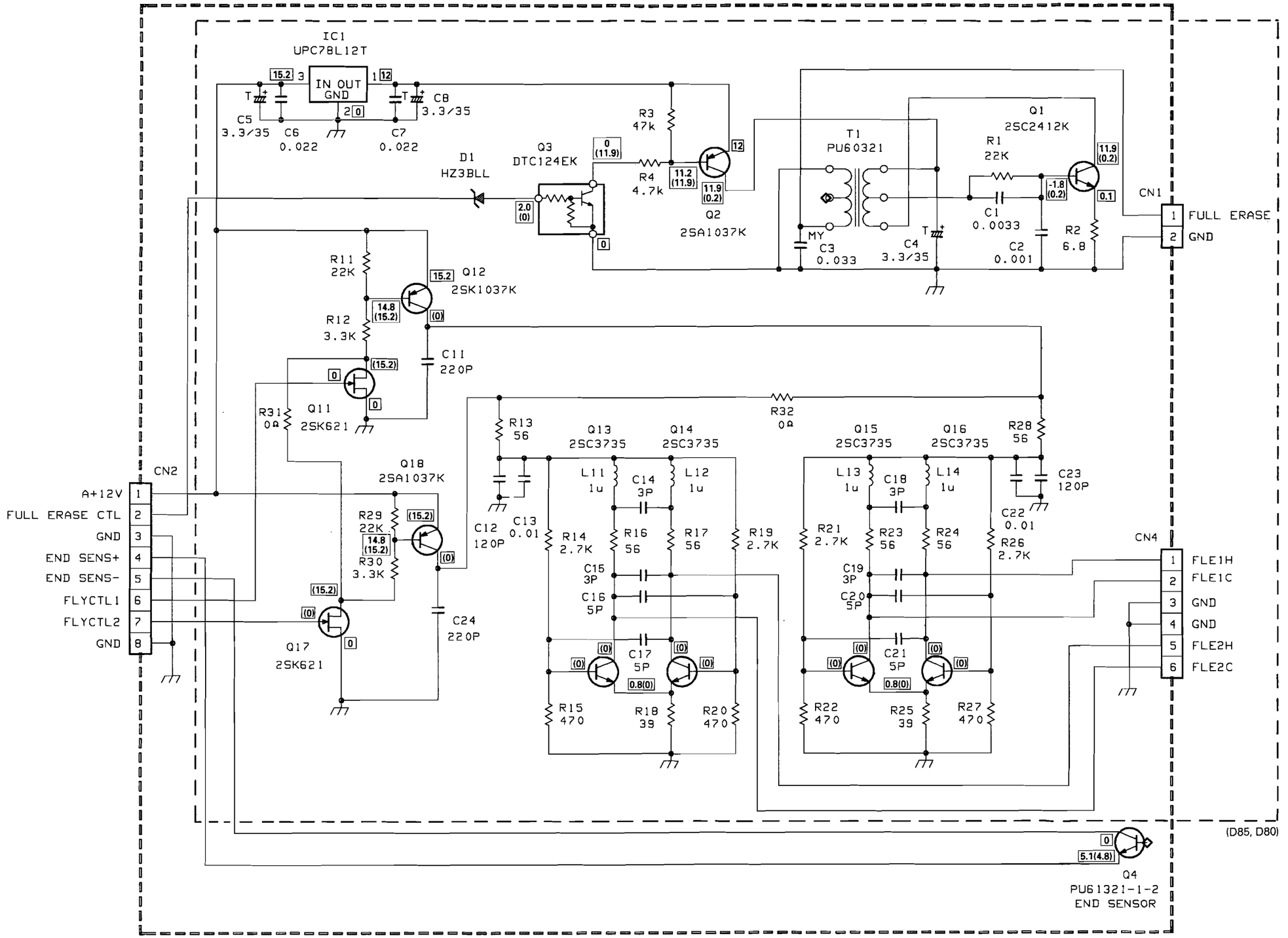

## 4.54 E. SENS/FLY E CIRCUIT BOARDS

— SIDE A —

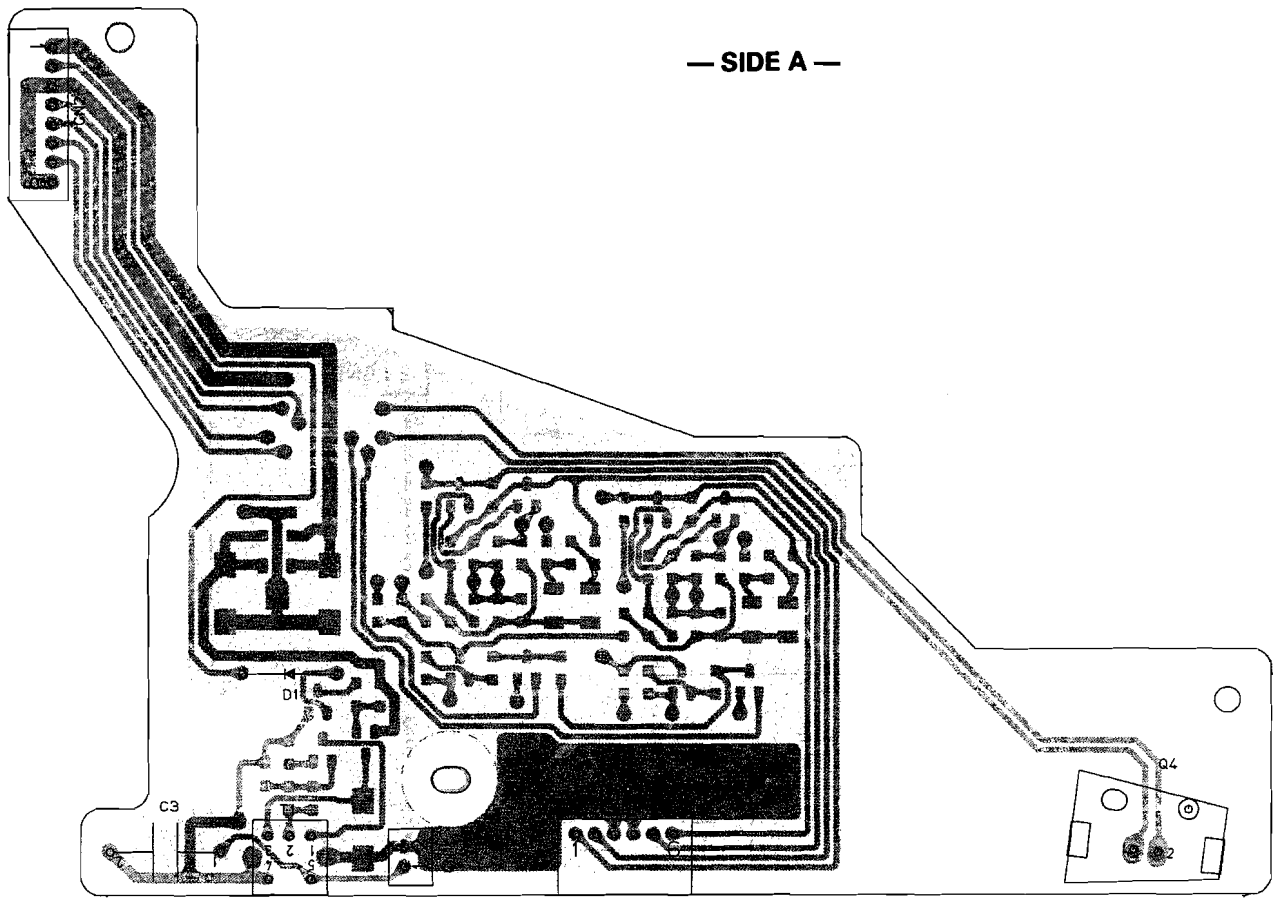


(E. SENS/FLY E)

— SIDE B —

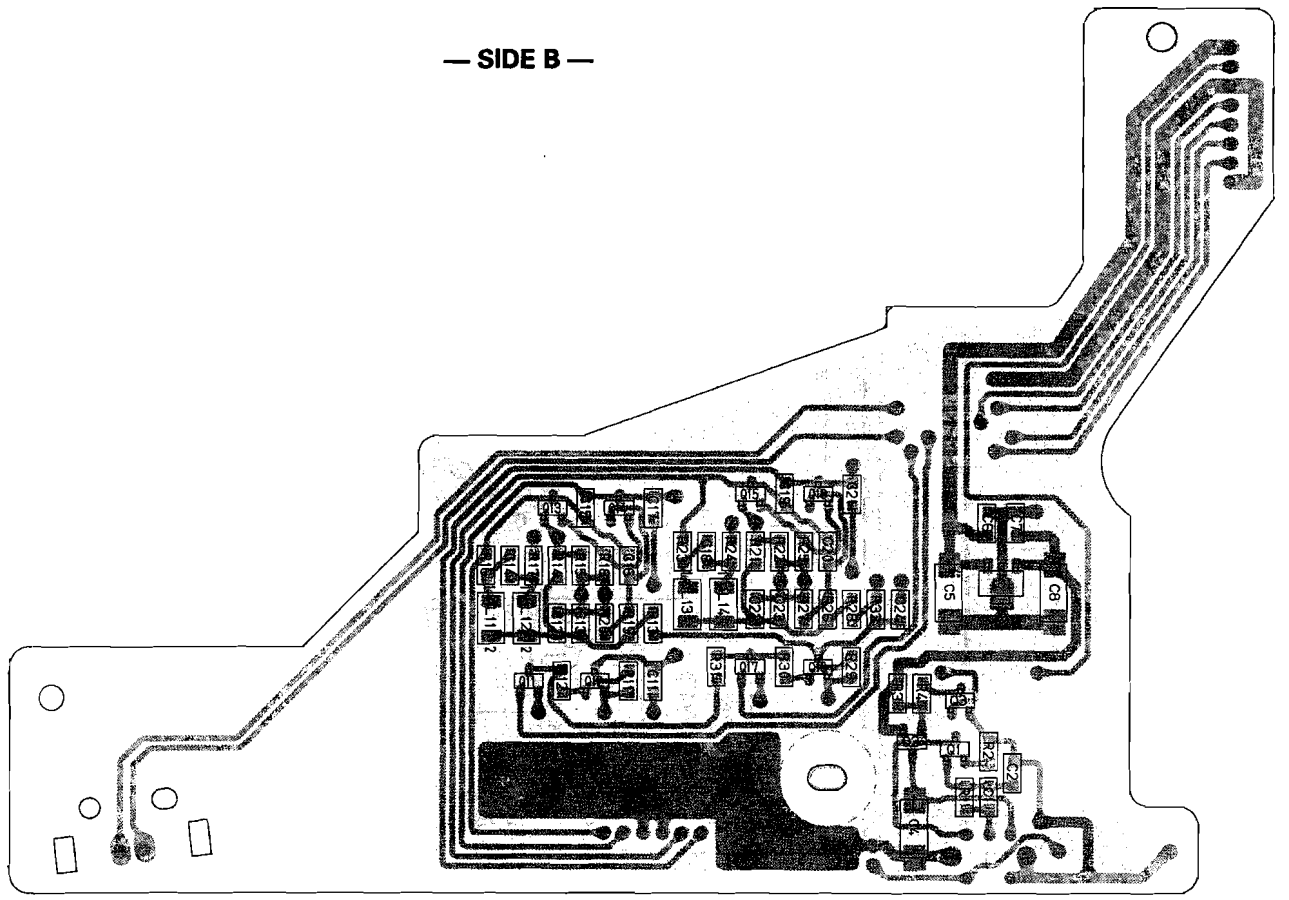

(E. SENS/FLY E)

— SIDE A —

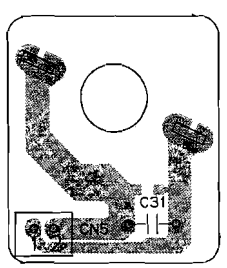


(MOTOR)

— SIDE B —

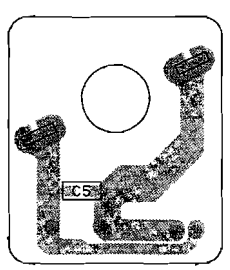


(MOTOR)

— SIDE A —

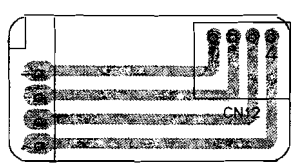


(W. SENSOR)

— SIDE A —

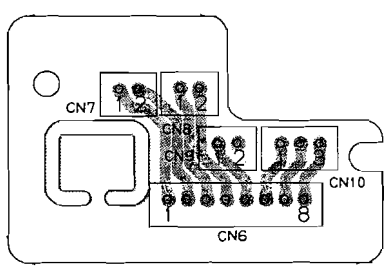


(MECHA TERMINAL)

— SIDE A —

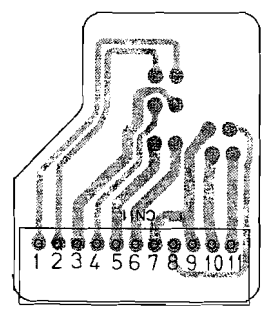


(A/C HEAD)

## 4.55 DIG I/O CIRCUIT BOARD BLOCK DIAGRAM (D85)

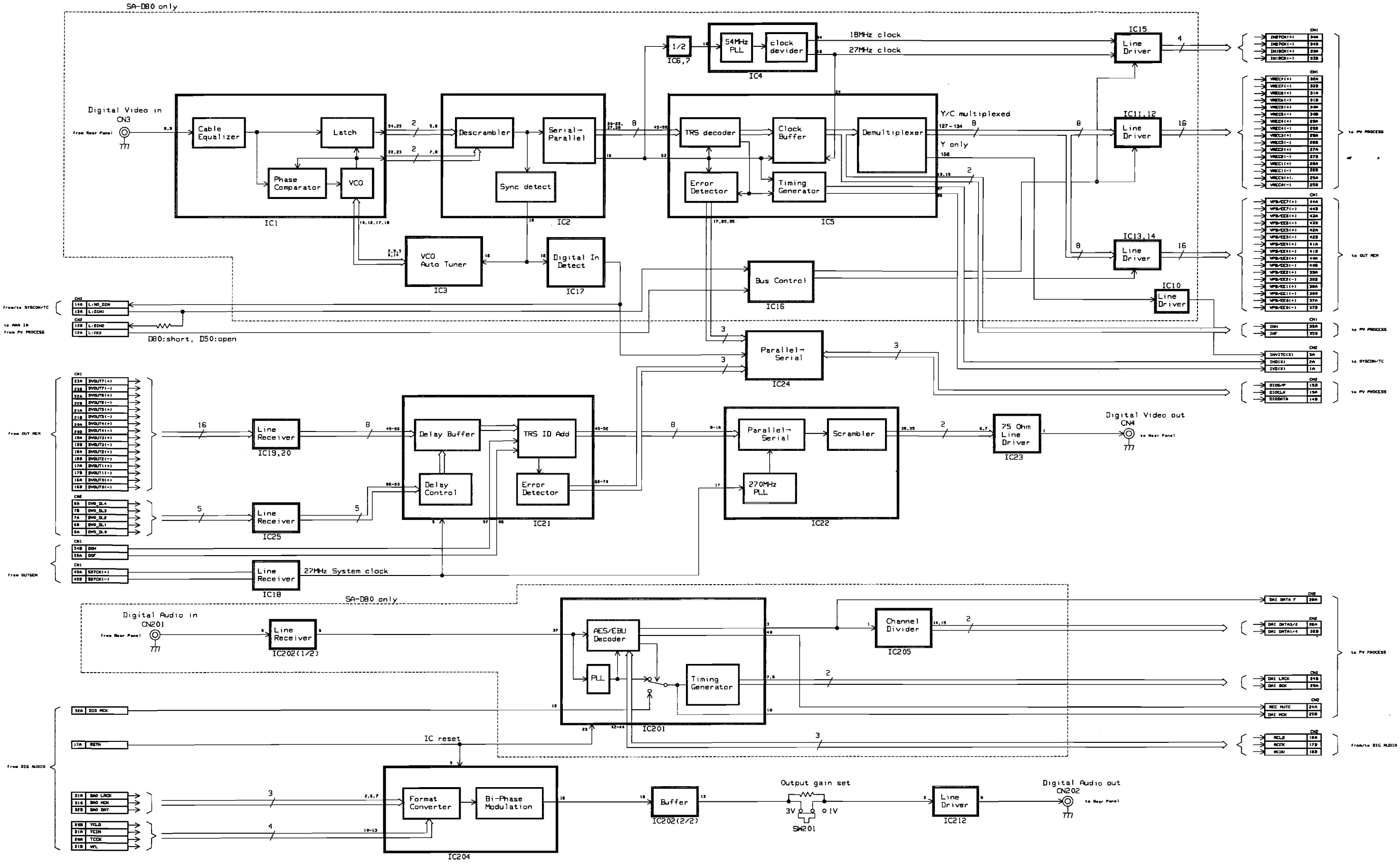

## 4.56 DIG I/O SCHEMATIC DIAGRAM (D85)

### — DIAGRAM 1/3 —

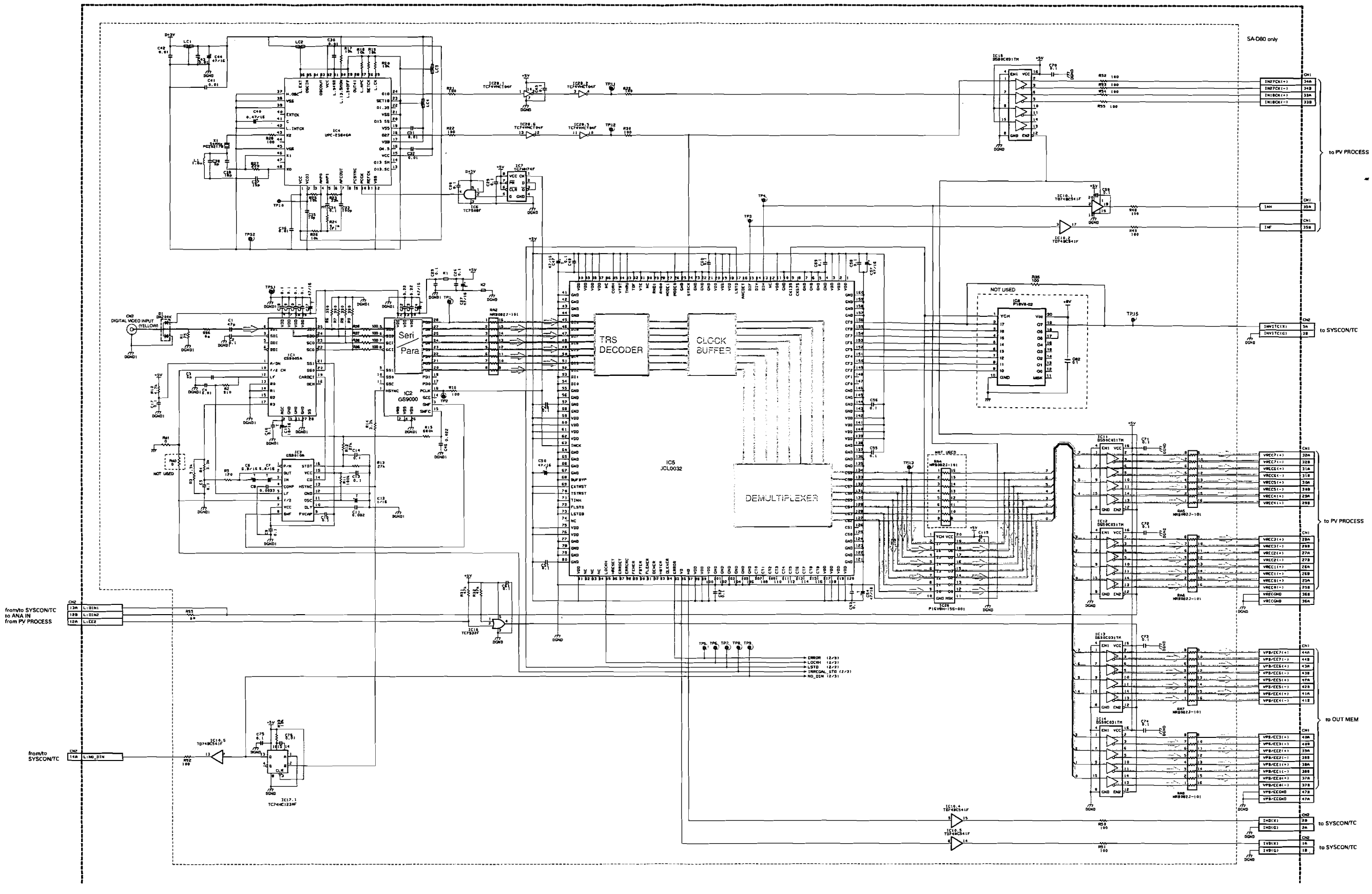

**— DIAGRAM 2/3 —**

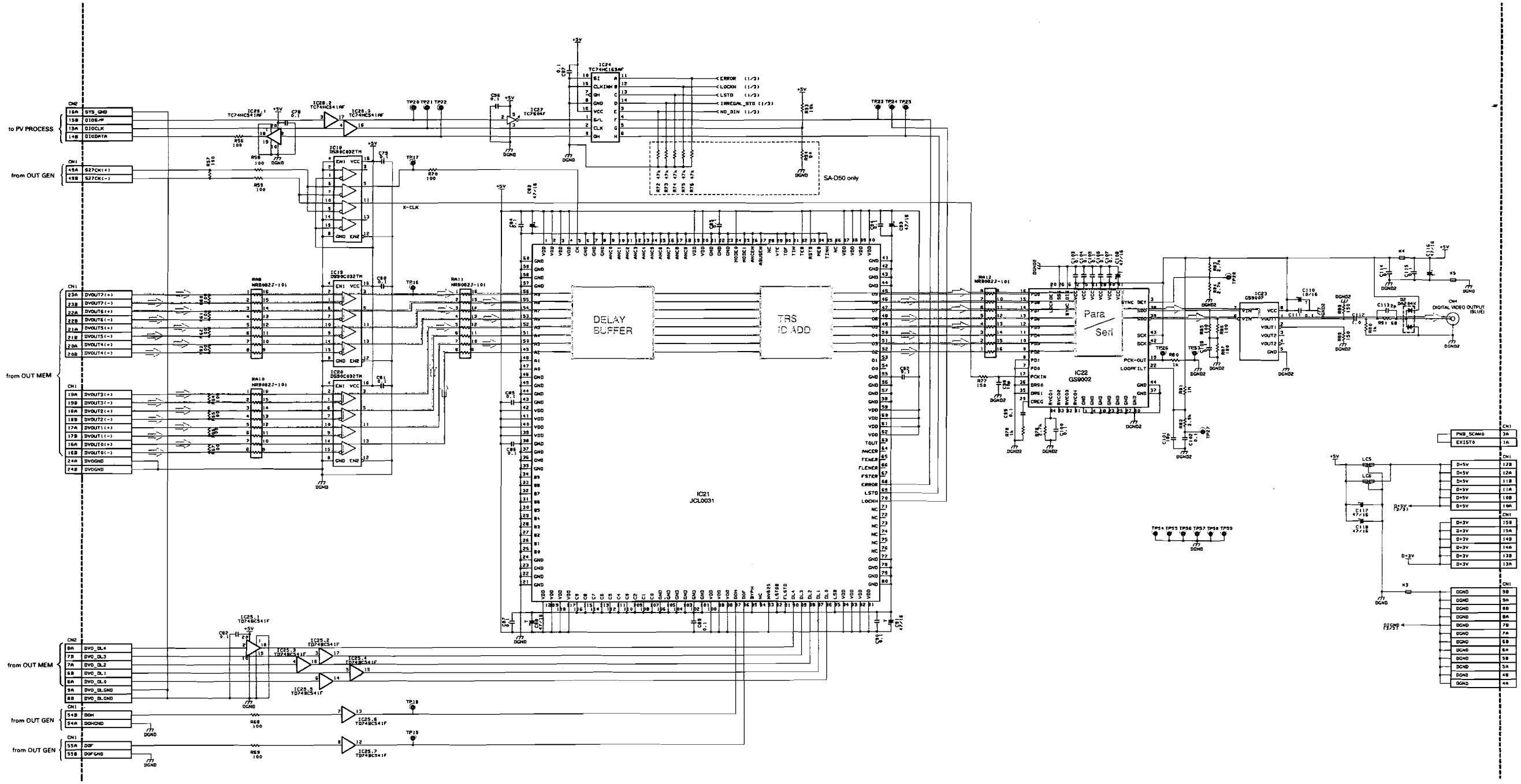
to PV PROCESS
from OUT GEN
from OUT MEM
from OUT MEM
from OUT GEN
from OUT GEN
SA-D50 only
X-CLK
DELAY BUFFER
TRS ID ADD
IC21 JCL0031
IC22 GS9002
Para / Seri
DIGITAL VIDEO OUTPUT (BLUE)

## — DIAGRAM 3/3 —

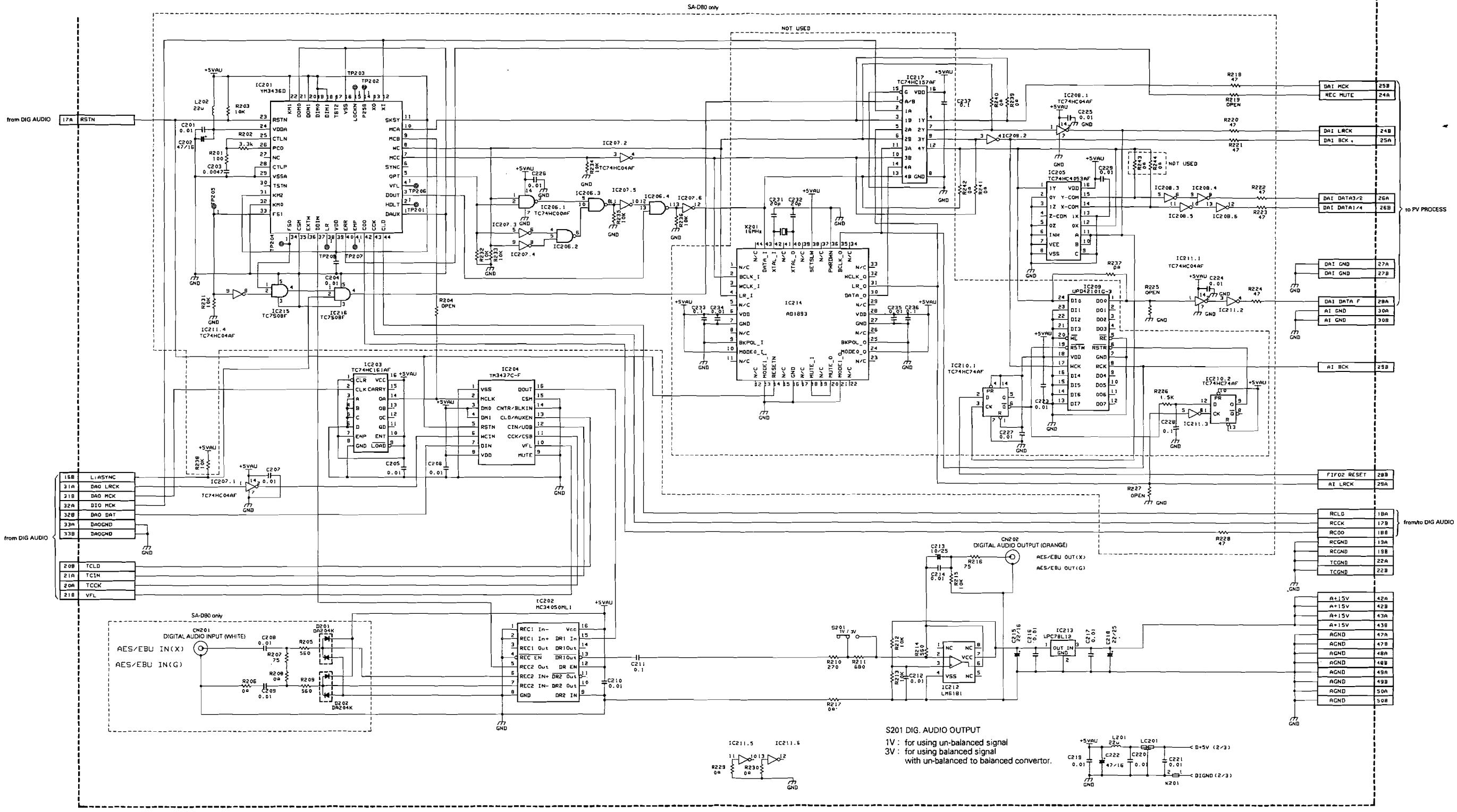
SA-D80 only
NOT USED
from DIG AUDIO
17A RSTN
IC201 YM3436D
IC202 NJM4050ML1
IC203 TC74HC161AF
IC204 TM3437C-F
IC205 TC74HC4053AF
IC207 TC74HC04AF
IC208 TC74HC04AF
IC209 UPD42101G-3
IC210 TC74HC74AF
IC211 TC74HC04AF
IC212 LM6181
IC213 LPC78L12
IC214 AD1893
IC215 TC7S08F
IC216 TC7S08F
X201 16MHz
S201 1V / 3V
CN201 DIGITAL AUDIO INPUT (WHITE)
AES/EBU IN(X)
AES/EBU IN(G)
CN202 DIGITAL AUDIO OUTPUT (ORANGE)
AES/EBU OUT(X)
AES/EBU OUT(G)
15B L-ASYNC
31A DAO LRCK
31B DAO MCK
32A DIO MCK
32B DAO DAT
33A DAOGND
33B DAOGND
20B TCLD
21A TCIN
20A TCCK
21B VFL
DAI MCK 25B
REC MUTE 24A
DAI LRCK 24B
DAI BCK 25A
DAI DATA3/2 26A
DAI DATA1/0 26B
to PV PROCESS
DAI GND 27A
DAI GND 27B
DAI DATA F 29A
AI GND 30A
AI GND 30B
AI BCK 25B
FIFO2 RESET 28B
AI LRCK 29A
RCLD 18A
RCCK 17B
RCOO 18B
RCGND 13A
RCGND 19B
TCGND 22A
TCGND 22B
from/to DIG AUDIO
A+15V 42A
A+15V 42B
A+15V 43A
A+15V 43B
AGND 47A
AGND 47B
AGND 48A
AGND 48B
AGND 49A
AGND 49B
AGND 50A
AGND 50B
S201 DIG. AUDIO OUTPUT
1V : for using un-balanced signal
3V : for using balanced signal
with un-balanced to balanced convertor.
D+5V (2/3)
DIGND (2/3)

## 4.57 DIG I/O CIRCUIT BOARD (D85)

— SIDE A —

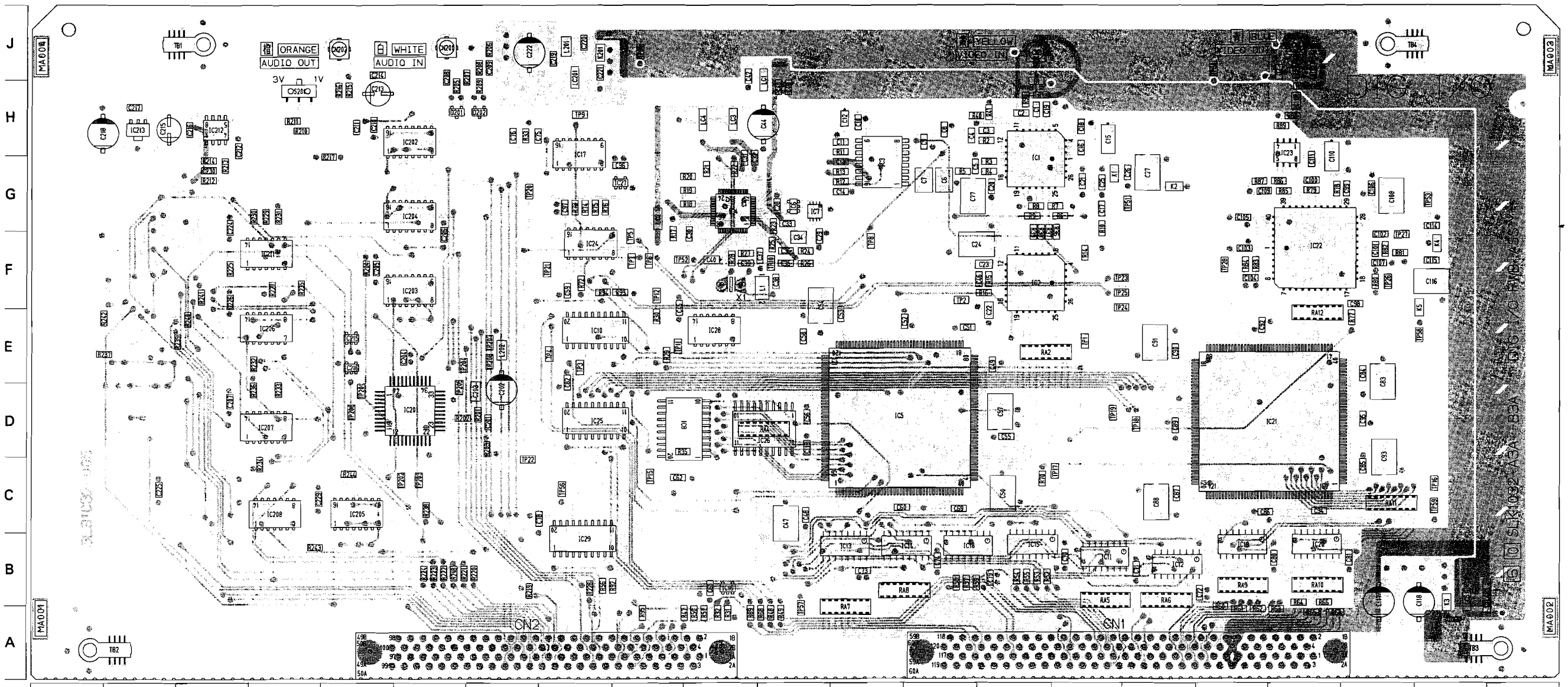


(SL81032-005)

### ● ADDRESS TABLE OF BOARD PARTS

Side — A-1C — Y axis / X axis

Each address may have an address error by one interval.

| | | | | | | | | | | | | | | | | | | | | | | | | | | | |
|---|---|---|---|---|---|---|---|---|---|---|---|---|---|---|---|---|---|---|---|---|---|---|---|---|---|---|---|
| C1 | 14G | IC29 | 8B | R3 | 14G | R30 | 9E | R63 | 18B | R91 | 18J | R222 | 6B | C4 | 13H | C31 | 10G | C58 | 11E | C91 | 16E | C118 | 20B | C226 | 3F | TP11 | 9E | TP203 | 6C | K1 | 15G |
| IC2 | 14F | IC201 | 6D | R4 | 14G | R31 | 10A | R64 | 18B | R92 | 8B | R223 | 6B | C5 | 13G | C32 | 10G | C59 | 8F | C92 | 17E | C119 | 11D | C227 | 3C | TP12 | 9F | TP204 | 6E | K2 | 16G |
| IC3 | 12G | IC202 | 5H | R5 | 13G | R32 | 10A | R65 | 18A | R93 | 9F | R224 | 6B | C6 | 13G | C33 | 11G | C60 | 12C | C93 | 19D | C201 | 7D | C228 | 2C | TP15 | 9C | TP205 | 6D | K3 | 20B |
| IC4 | 10G | IC203 | 5F | R6 | 15G | R33 | 7H | R66 | 18B | R94 | 8F | R225 | 3F | C7 | 13G | C34 | 11F | C61 | 10B | C94 | 18C | C202 | 7D | C229 | 4C | TP16 | 20C | TP206 | 5D | K4 | 20F |
| IC5 | 12D | IC204 | 5G | R7 | 15G | R35 | 9D | R67 | 18A | R95 | 9A | R226 | 3C | C8 | 13H | C35 | 11F | C62 | 9C | C95 | 19D | C203 | 7D | C230 | 3G | TP17 | 15C | TP207 | 7E | K5 | 20E |
| IC6 | 11G | IC205 | 5C | R8 | 14G | R36 | 15F | R68 | 10A | R96 | 14H | R227 | 4F | C9 | 13H | C36 | 11F | C69 | 13C | C96 | 9G | C204 | 6E | C231 | 1F | TP18 | 16D | TP208 | 7E | K201 | 8J |
| IC7 | 11G | IC206 | 3E | R9 | 14G | R37 | 14F | R69 | 10A | R201 | 7D | R228 | 8B | C10 | 12H | C37 | 10F | C70 | 15B | C97 | 8G | C205 | 5F | C232 | 1G | TP19 | 15D | | | | |
| IC8 | 9D | IC207 | 3D | R10 | 15G | R38 | 14F | R70 | 14C | R202 | 6D | R229 | 4G | C11 | 12H | C38 | 11F | C71 | 16B | C98 | 19F | C206 | 6F | C233 | 3F | TP20 | 7G | LC1 | 11H | RA2 | 14E |
| IC10 | 8E | IC208 | 4C | R11 | 12H | R39 | 14F | R72 | 8F | R203 | 7D | R230 | 4G | C12 | 12H | C39 | 10F | C72 | 16B | C99 | 19G | C207 | 3D | C234 | 2F | TP21 | 8F | LC2 | 9G | RA4 | 11D |
| IC11 | 15B | IC209 | 2D | R12 | 12G | R40 | 13H | R73 | 8G | R204 | 5F | R231 | 4G | C13 | 12G | C40 | 10F | C73 | 12B | C100 | 18G | C208 | 6J | C235 | 3G | TP22 | 7C | LC3 | 10H | RA5 | 15B |
| IC12 | 16B | IC210 | 2C | R13 | 12G | R41 | 14H | R74 | 8G | R205 | 6H | R232 | 4E | C14 | 12G | C41 | 11H | C74 | 13B | C101 | 19F | C209 | 7J | C236 | 2G | TP23 | 15F | LC4 | 10H | RA6 | 16B |
| IC13 | 12B | IC211 | 3F | R14 | 15F | R47 | 9A | R75 | 8G | R206 | 7J | R233 | 4D | C15 | 15H | C42 | 10J | C75 | 7H | C102 | 19F | C210 | 5H | C237 | 2F | TP24 | 15E | LC5 | 20B | RA7 | 12B |
| IC14 | 13B | IC212 | 3H | R15 | 14F | R48 | 11A | R76 | 8G | R207 | 6J | R234 | 4C | C16 | 15H | C43 | 11H | C76 | 7H | C103 | 17F | C211 | 5H | | | TP25 | 15F | LC6 | 20B | RA8 | 12B |
| IC15 | 15B | IC213 | 2H | R16 | 14F | R49 | 11A | R77 | 19E | R208 | 7J | R235 | 4F | C17 | 15G | C44 | 11H | C77 | 13G | C104 | 17F | C212 | 3H | L1 | 11F | TP26 | 19F | LC201 | 8J | RA9 | 17B |
| IC16 | 10B | IC214 | 2F | R17 | 9F | R50 | 10A | R78 | 18G | R209 | 7H | R236 | 4D | C18 | 15H | C45 | 9E | C78 | 7C | C105 | 17G | C213 | 5H | L201 | 8J | TP27 | 19F | | | RA10 | 18B |
| IC17 | 8H | IC215 | 5E | R18 | 10G | R51 | 10A | R79 | 18G | R210 | 4H | R237 | 1E | C19 | 14H | C46 | 14F | C79 | 14B | C106 | 19G | C214 | 5J | L202 | 7E | TP28 | 17F | X1 | 10F | RA11 | 19C |
| IC18 | 14B | IC216 | 5E | R19 | 10G | R52 | 14B | R80 | 19F | R211 | 4H | R238 | 6C | C20 | 14G | C47 | 11C | C80 | 18B | C107 | 19F | C215 | 2H | | | TP51 | 16G | X201 | 2F | RA12 | 18E |
| IC19 | 17B | IC217 | 2F | R20 | 10G | R53 | 14B | R81 | 19F | R212 | 3G | R239 | 2E | C21 | 15G | C48 | 11C | C81 | 19B | C108 | 19G | C216 | 3H | TP1 | 15E | TP52 | 9F | | | | |
| IC20 | 18B | | | R21 | 10G | R54 | 14B | R82 | 19F | R213 | 3G | R240 | 3E | C22 | 14E | C49 | 14E | C82 | 8D | C109 | 17G | C217 | 2H | TP2 | 13F | TP53 | 20G | S201 | 4H | TB1 | 3J |
| IC21 | 17D | D1 | 14H | R22 | 10G | R55 | 14B | R83 | 17F | R214 | 3G | R241 | 3F | C23 | 14F | C50 | 14C | C83 | 19D | C110 | 18G | C218 | 1H | TP3 | 8E | TP54 | 17J | | | TB2 | 1A |
| IC22 | 18F | D2 | 18J | R23 | 11G | R56 | 8B | R84 | 17F | R215 | 5H | R242 | 1E | C24 | 13F | C51 | 13E | C84 | 19E | C111 | 18G | C219 | 8J | TP4 | 8E | TP55 | 9J | CN1 | 16A | TB3 | 21A |
| IC23 | 18H | D201 | 6H | R24 | 11F | R57 | 13B | R85 | 18G | R216 | 5H | R243 | 4B | C25 | 15G | C52 | 12E | C85 | 19C | C112 | 18H | C220 | 8J | TP5 | 9F | TP56 | 8C | CN2 | 8A | TB4 | 19J |
| IC24 | 8F | D202 | 7H | R25 | 11F | R58 | 13B | R86 | 18G | R217 | 5G | R244 | 5C | C26 | 16G | C53 | 12E | C86 | 17C | C113 | 18J | C221 | 8J | TP6 | 9F | TP57 | 11B | CN3 | 14J | | |
| IC25 | 8D | | | R26 | 11F | R59 | 13B | R87 | 17G | R218 | 6B | | | C27 | 16G | C54 | 11F | C87 | 16C | C114 | 20G | C222 | 7J | TP7 | 9F | TP58 | 20E | CN4 | 18J | | |
| IC26 | 11D | R1 | 14H | R27 | 10F | R60 | 17B | R88 | 18H | R219 | 7B | C1 | 14H | C28 | 11G | C55 | 14D | C88 | 16C | C115 | 20F | C223 | 2E | TP8 | 12F | TP59 | 20C | CN201 | 6J | | |
| IC27 | 9G | R2 | 14H | R28 | 10F | R61 | 17B | R89 | 18H | R220 | 7B | C2 | 14H | C29 | 11F | C56 | 11D | C89 | 16D | C116 | 20F | C224 | 3G | TP9 | 8H | TP201 | 5D | CN202 | 5J | | |
| IC28 | 10E | | | R29 | 9E | R62 | 17B | R90 | 18H | R221 | 6B | C3 | 14H | C30 | 10F | C57 | 14D | C90 | 16E | C117 | 19B | C225 | 2C | TP10 | 11F | TP202 | 6C | | | | |


4-113

## SCHEMATIC DIAGRAM OF ICs

### ■ ADC1034CIWM 【NATIONAL SEMICONDUCTOR】
**(10 8it Serial I/O A/D Cnverters with Analog Multiplexer and Track/Hold Function)**

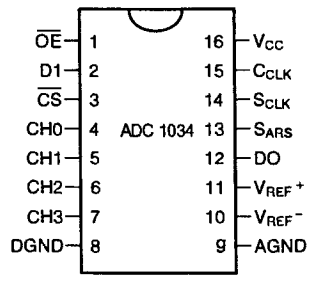


Top View

### ■ AN3834K 【MATSUSHITA】
**(VTR Reel Motor Drive)**

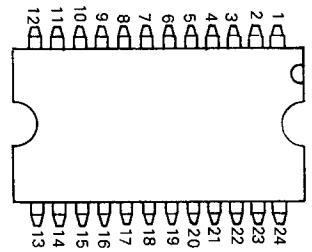


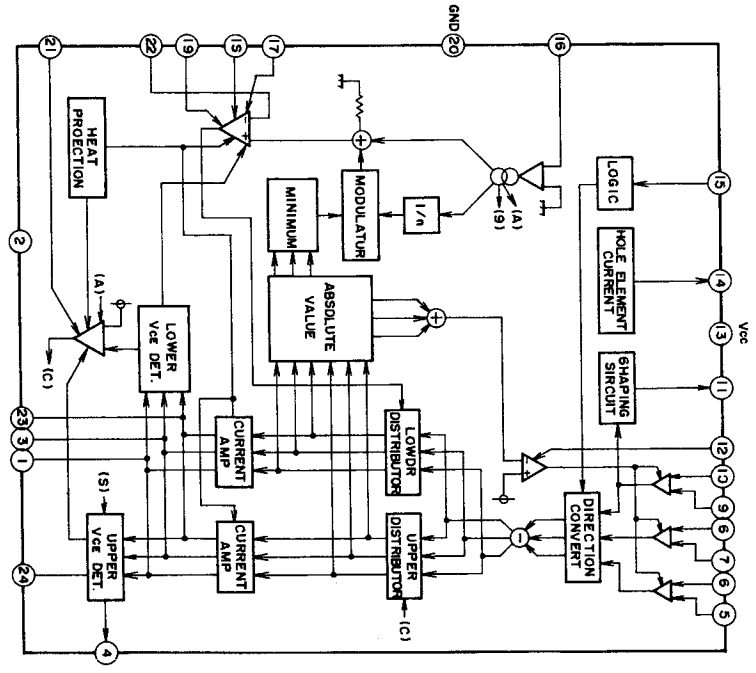


### ■ AK5340-VS 【ASAHIKASEI】
**(18 bit 2ch A/D Converter)**

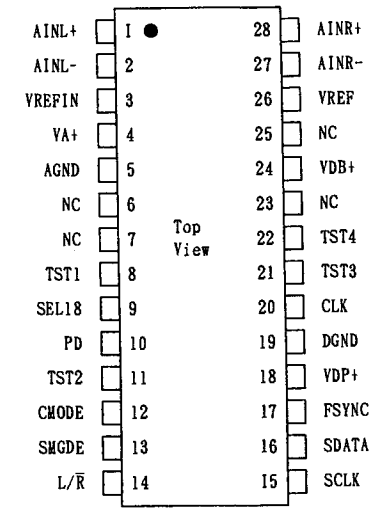


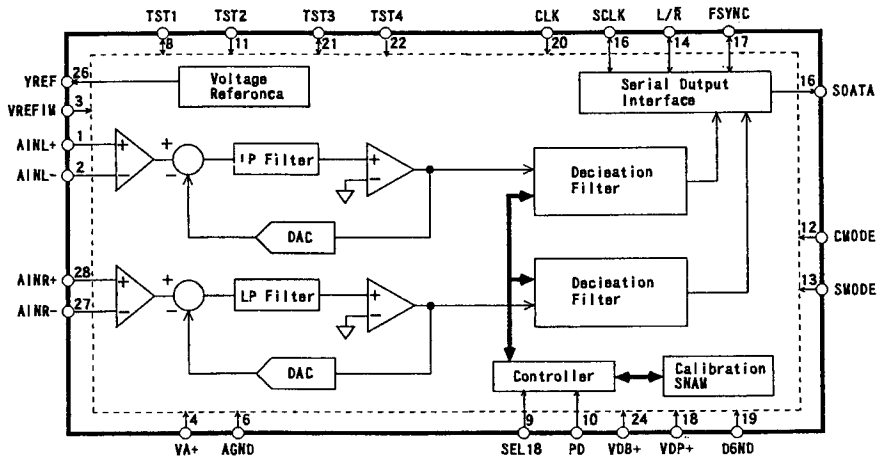


### ■ 8A10339F 【ROHM】
**(Quad Comparator)**

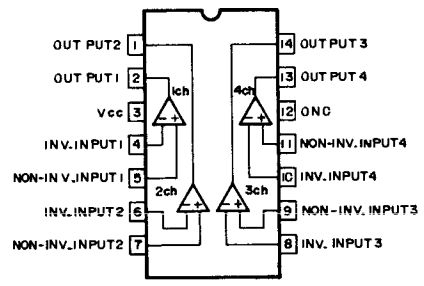


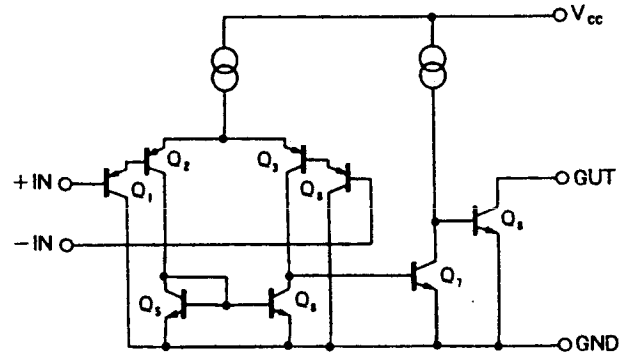


### ■ AN77L03M 【MATSUSHITA】
**(Voltage Regulator)**

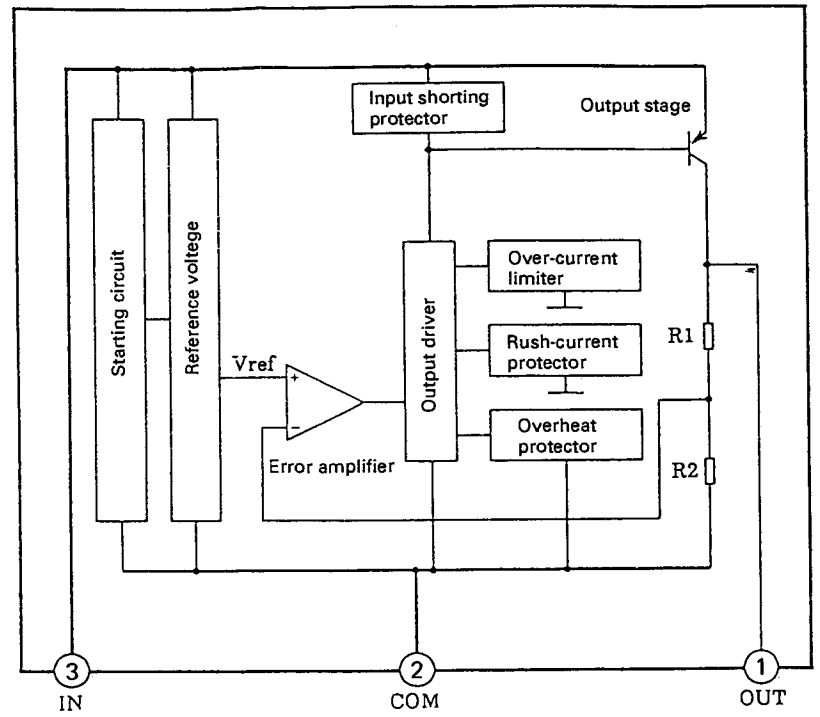


### ■ 8A10358F 【ROHM】
**(Dual Ground Sense Op.Amp)**

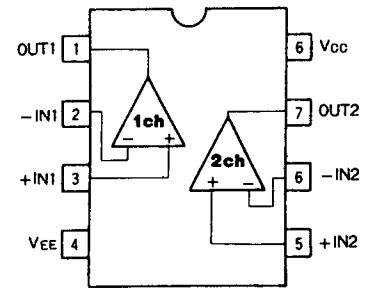


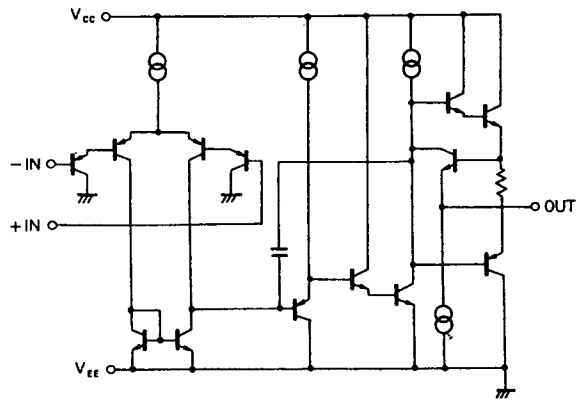

## ■ BA10393F 【ROHM】
(Dual Ccmparater)

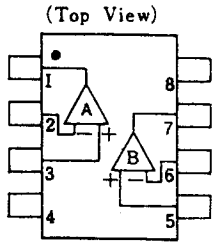


Pin
1. A OUTPUT
2. A−INPUT
3. A+INPUT
4. V⁻
5. B+INPUT
6. B−INPUT
7. B OUTPUT
8. V⁺

## ■ BA7043FS 【ROHM】
(VTR Autc Tracking Interface)

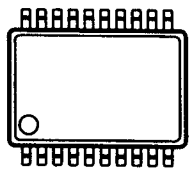

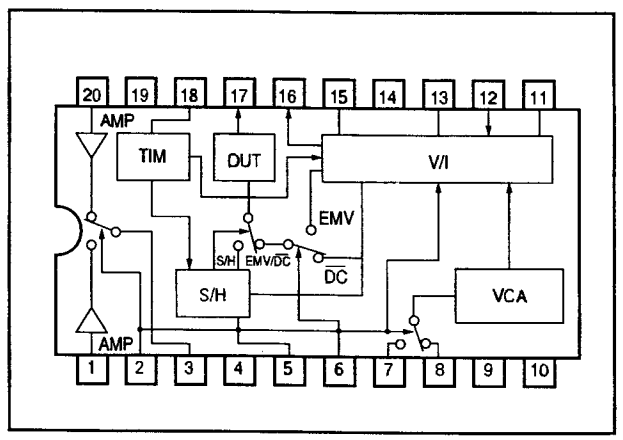


## ■ BA6441FP 【ROHM】
(Meter Oriver)

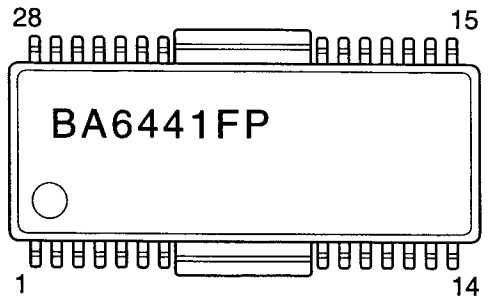


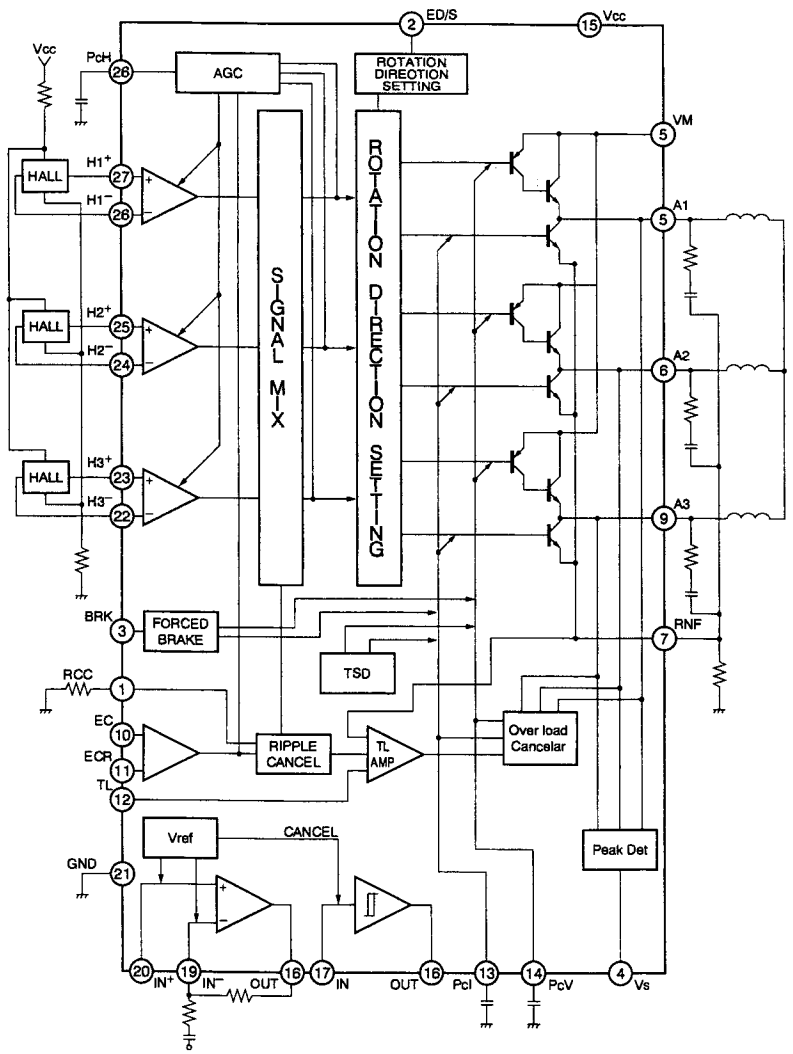


## ■ BR24C01AF 【ROHM】
(IIC Bus 1k Serial EEPROM)

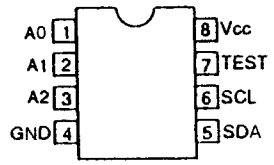


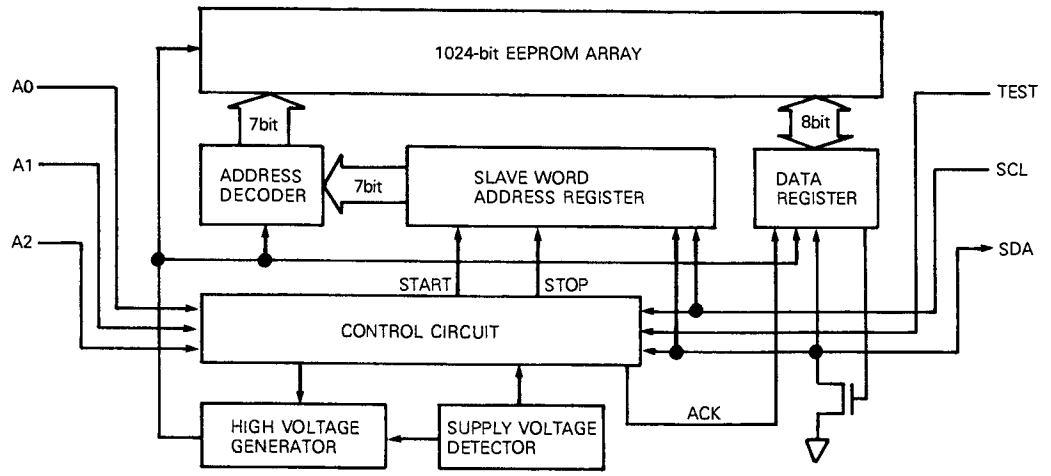


## ■ BR24C02F 【ROHM】
(IIC Bus 2k Sarial EEPROM)

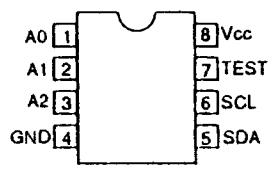


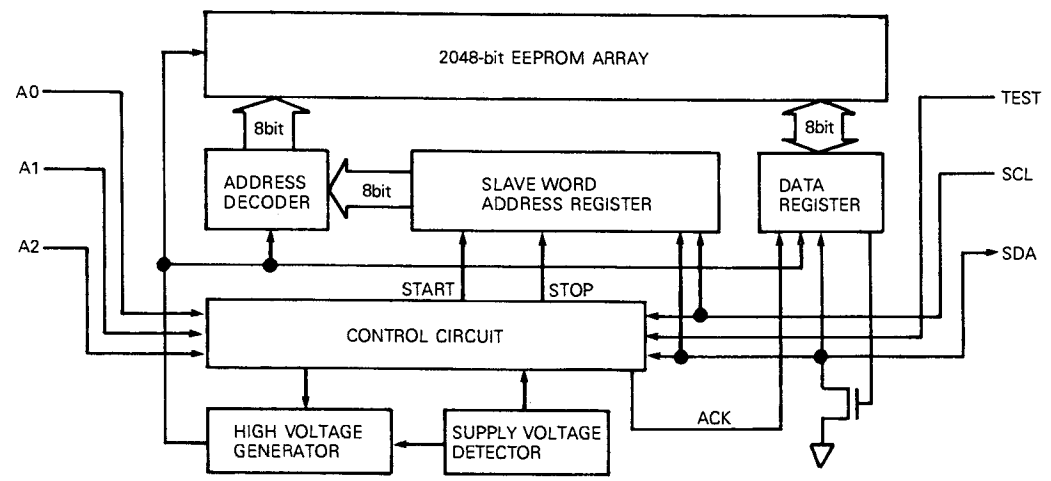

## ■ BR24C04F 【ROHM】
**(IIC Bus 2K Seriel EEPROM)**

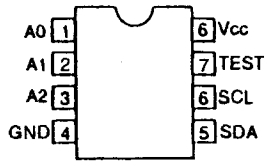


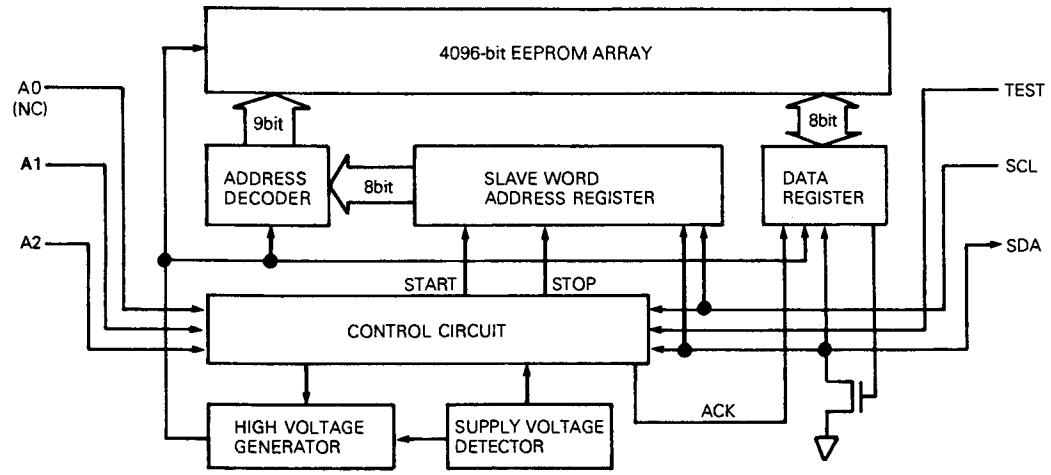


## ■ CLC401AJE 【COMLINEAR】
**(Current Feedback Op.Amp.)**

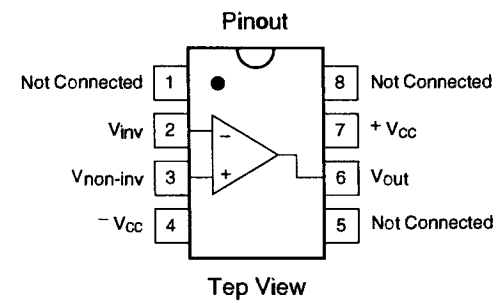


## ■ CLC520AJE 【COMLINEAR】
**(AGC Amp.)**

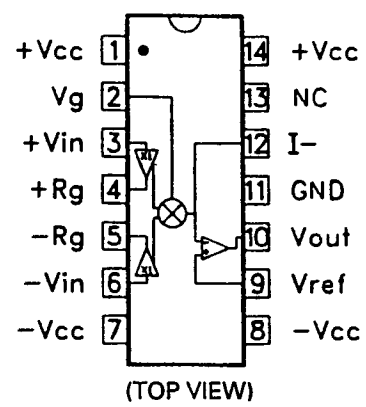


## ■ CXA1211M 【SONY】
**(Electric Volume)**

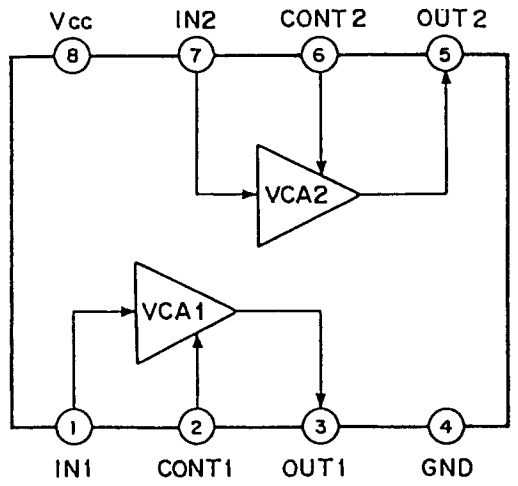


## ■ CXD1171M 【SONY】
**(B Bit 40MSPS D/A Converter)**

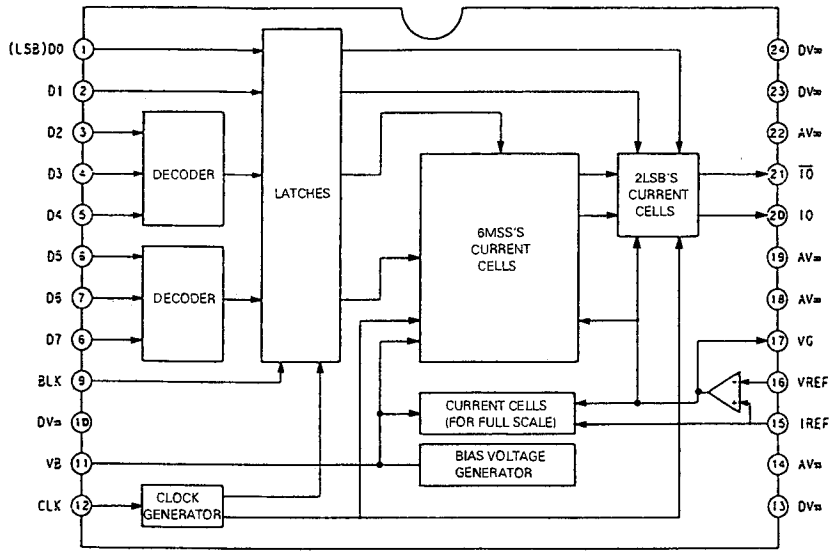


## ■ CXD1175AM 【SONY】
**(S-Bit 20MSPS Video A/D Converter)**

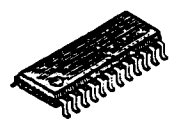

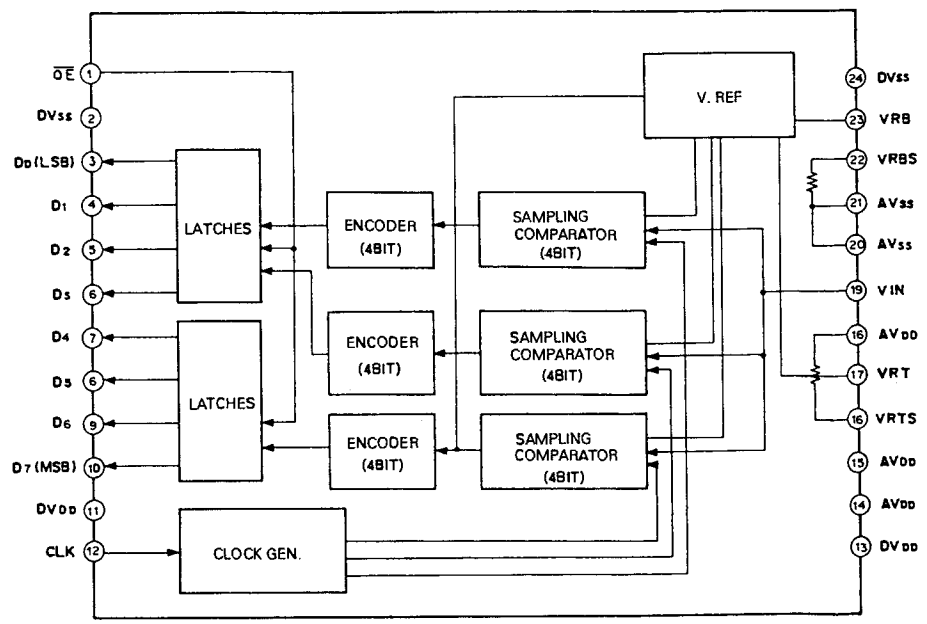


## ■ CXD1177Q 【SONY】
**(S-Bit 40MSPS Y/C 2-chennel D/A Cenverter)**

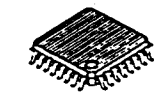

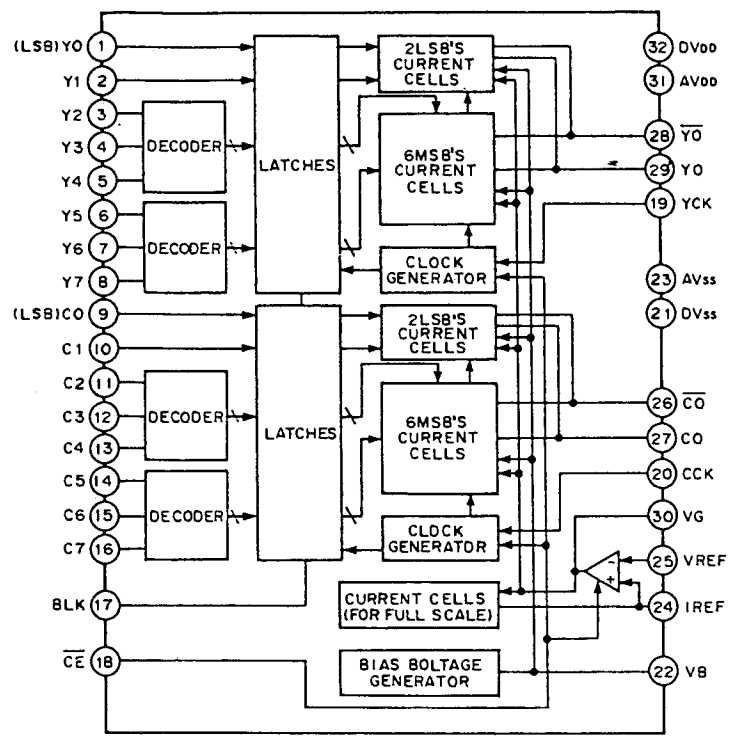

## ■ CXD1216M 【SONY】
**(Gen Look)**

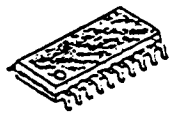

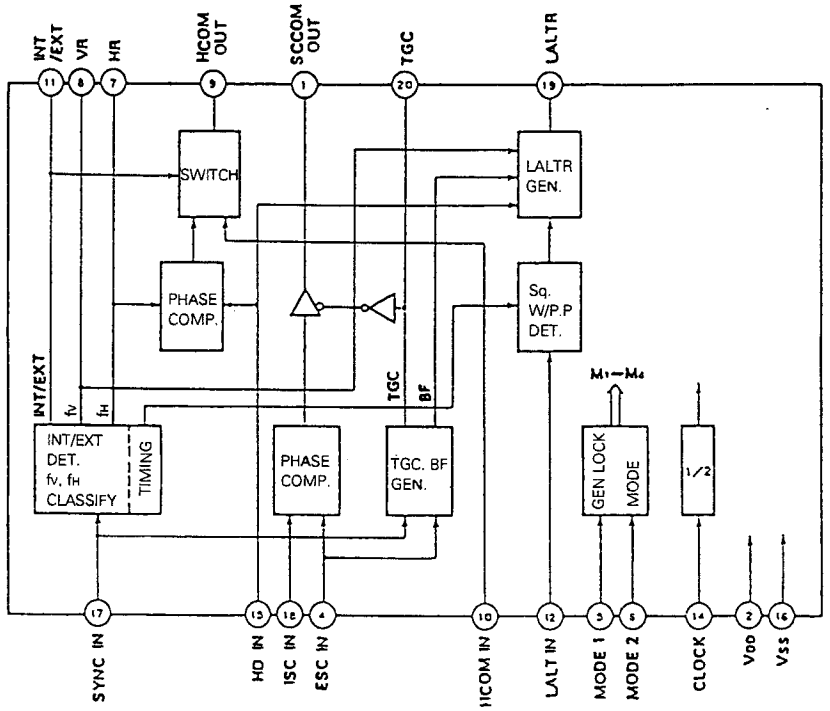


## ■ DS90C031TM 【NATIONAL SEMICONDUCTOR】
**(LVDS Quad CMOS Differential Line Driver)**

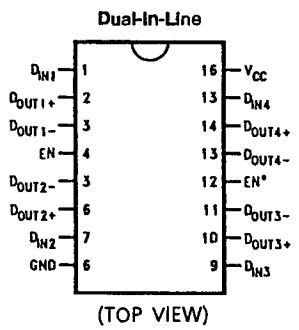


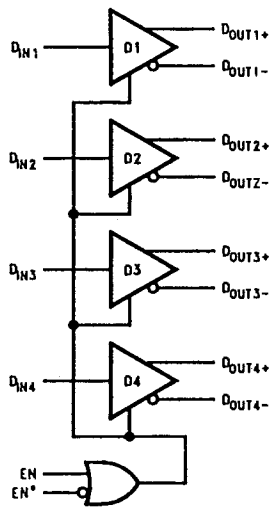


**DRIVER**

| Enables | | Input | Outputs | |
|---|---|---|---|---|
| EN | EN* | $D_{IN}$ | $D_{OUT+}$ | $D_{OUT-}$ |
| L | H | X | Z | Z |
| All othar combinations of ENA8LE inputs | | L | L | H |
| | | H | H | L |

## ■ CXD1217M 【SGNY】
**(Synohronizing Signal Genorator for Video Camera)**

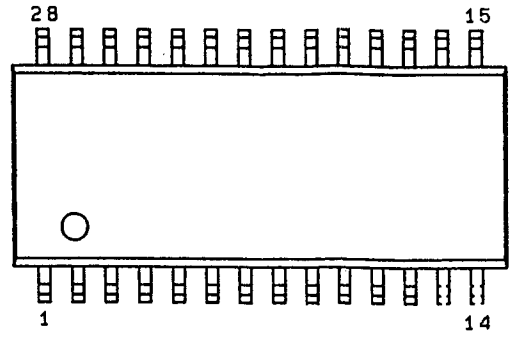


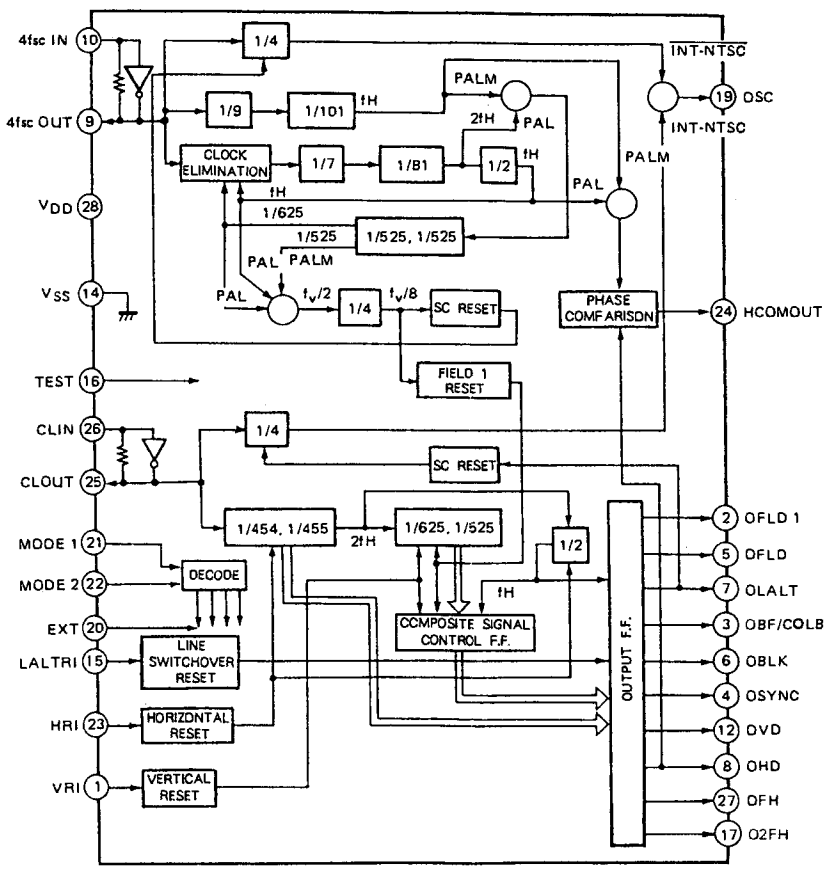


**Note** : Pin 19 output is (a) a signal based on Pin 26 in INT mode at NTSC.
(b) each signal is based on Pin 10 in other modes.

**Pin Description**

| Pin No. | Symbol | I/O | Description |
|---|---|---|---|
| 1 | VRI | I | Vertical reset signal |
| 2 | OFLD1 | O | First field output |
| 3 | OBF/COLB | G | Burst flag/color blanking output |
| 4 | OSYNC | O | Composite sync output |
| 5 | OFLD | O | Even and Odd output |
| 6 | OBLK | O | Composite blanking output |
| 7 | OLALT | O | Line alternate output |
| 8 | OHD | O | Horizontal drive output |
| 9 | 4fscOUT | O | 4fsc output |
| 10 | 4fscIN | I | 4fsc input |
| 11 | NC | — | |
| 12 | OVD | O | Vertical drive output |
| 13 | NC | — | |
| 14 | Vss | — | GND pin |
| 15 | LALTRI | I | Line elternate reset input |
| 16 | TEST | I | Tast input |
| 17 | O2FH | O | 2fH output (Double the frequency of Pin 27) |
| 18 | NC | — | |
| 19 | OSC | O | Sub carrier output |
| 20 | EXT | I | Internal and external synchronizing modes switchover L : Internal synchronization H : External synchronizetion |
| 21 | MODE1 | I | System selecting input 1 |
| 22 | MODE2 | I | System selecting input 2 |
| 23 | HRI | I | Horizontal raset input |
| 24 | HCOMOUT | O | Phase comparator output |
| 25 | CLOUT | O | Clock output |
| 26 | CLIN | I | Clock input |
| 27 | OFH | O | Horizontal frequency output |
| 28 | VDD | — | Power supply pin |

## Timing Chart

### Dutput Timing Chart Diagram

CXD1217 NTSC, PALM

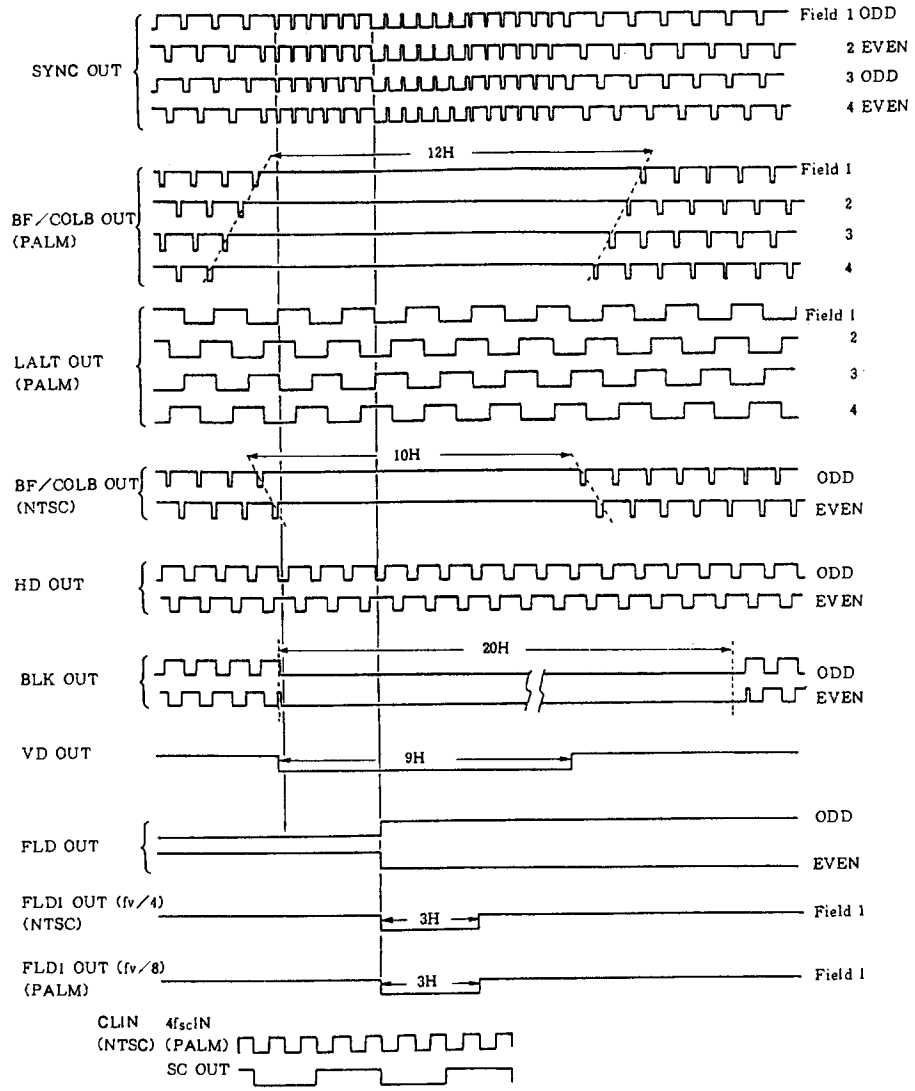


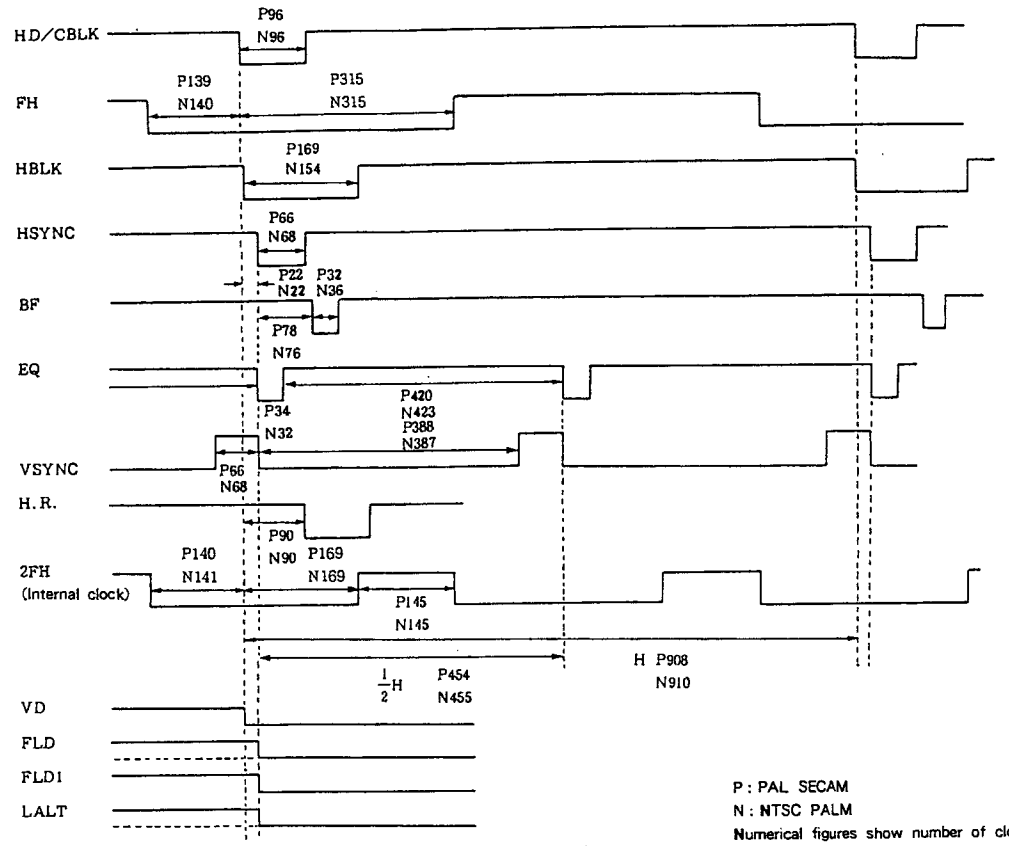


P : PAL SECAM
N : NTSC PALM
Numerical figures show number of clocks

## ■ DS90C032TM 【NATIONAL SEMICONDUCTOR】 (LVDS Qued CMOS Differential Line Receiver)

Dual-In-Line

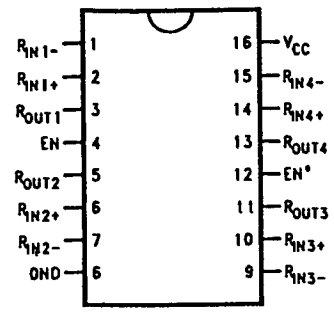


(TOP VIEW)

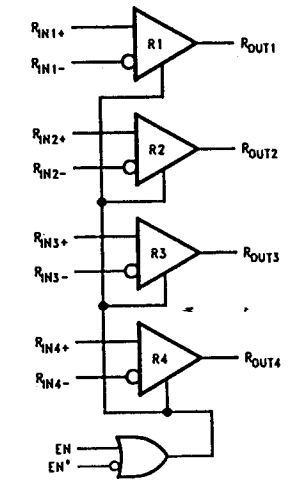


RECEIVER

| ENABLES | | INPUTS | OUTPUT |
|---|---|---|---|
| EN | EN* | $R_{IN+} - R_{IN-}$ | $R_{OUT}$ |
| L | H | X | Z |
| All other combinations of ENABLE inputs | | $V_{ID} \geq 0.1V$ | H |
| | | $V_{ID} \leq -0.1V$ | L |
| | | Full Failsafe OPEN/SHORT or Terminated | H |


IC-5

## ■ CXD2024AQ 【SONY】
**(Digital Comb Filter (NTSC/PAL))**

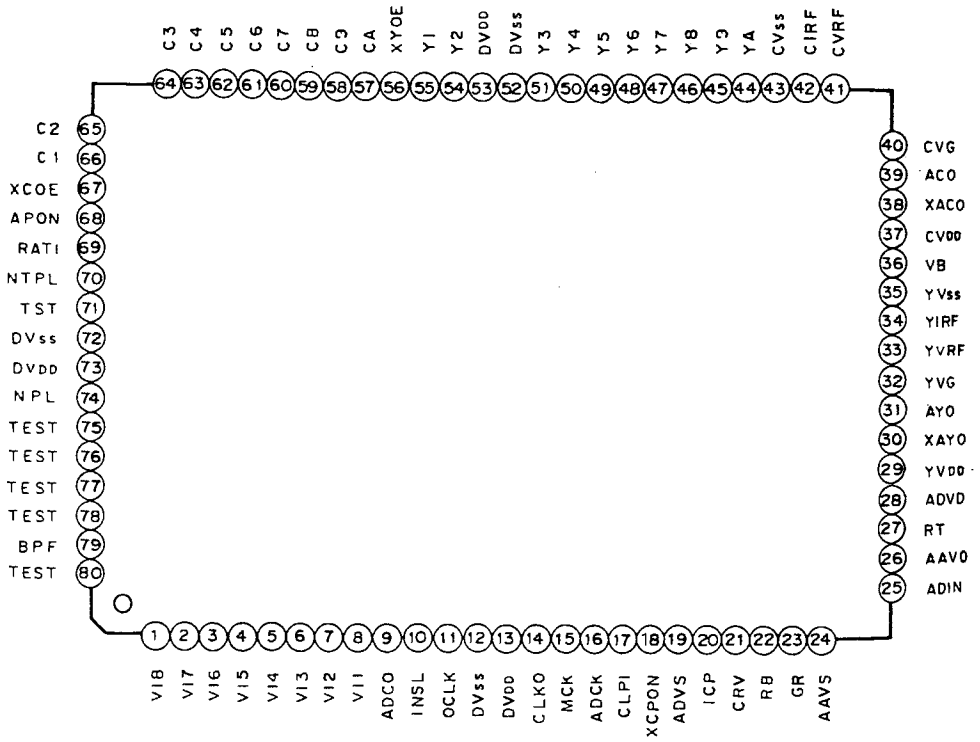


| Pin No. | Symbol | I/O | Description |
|---|---|---|---|
| 1 | VI8 | I | Digital input (MSB) When this pin is out of use, connect it with DVss or DVDD. |
| 2 | VI7 | I | Digital input When this pin is out of use, connect it with DVss or DVDD. |
| 3 | VI6 | I | Digital input When this pin is out of use, connect it with DVss or DVDD. |
| 4 | VI5 | I | Digital input When this pin is out of use, connect it with DVss or DVDD. |
| 5 | VI4 | I | Digital input When this pin is out of use, connect it with DVss or DVDD. |
| 6 | VI3 | I | Digital input When this pin is out of use, connect it with DVss or DVDD. |
| 7 | VI2 | I | Digital input When this pin is out of use, connect it with DVss or DVDD. |
| 8 | VI1 | I | Digital input (LSB) When this pin is out of use, connect it with DVss or DVDD. |
| 9 | ADCO | I | H: Outputs video signal supplied from A-D converter (input pin: ADIN) as 8-bit digital data which is delayed by 3.5 clocks from Y OUT terminal.<br>L: General operation mode |
| 10 | INSL | I | Input switching. Switches comb filter input.<br>H: Digital input<br>L: Analog input |
| 11 | OCLK | I | Clock amp. input. Input clock at a level of 0.8 Vp-p or higher after its DC component is cut off by capacitor. |
| 12 | DVss | — | Digital power ground |
| 13 | DVDD | — | Digital power supply (5 V) |
| 14 | CLKO | O | Clock amp. output |
| 15 | MCK | I | Clock input. Input 4 fsc clock locked with color burst to this pin.<br>This pin is generally connected with the pin 14 (clock amp output). |

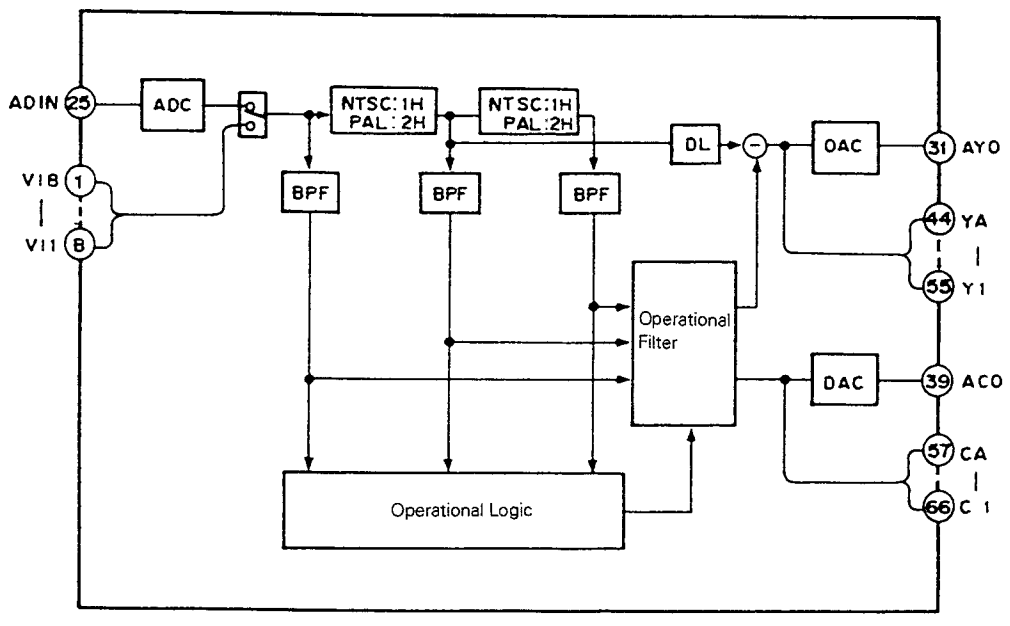


## ■ HM514260CTT-8 【HITACHI】
**(VMOS D-RAM)**

TSOP II

HITACHI pin No.

JEDEC pin No.

| | | | | | |
|---|---|---|---|---|---|
| Vcc | 1 | 1 | 44 | 40 | Vss |
| I/O0 | 2 | 2 | 43 | 39 | I/O15 |
| I/O1 | 3 | 3 | 42 | 38 | I/O14 |
| I/O2 | 4 | 4 | 41 | 37 | I/O13 |
| I/O3 | 5 | 5 | 40 | 36 | I/O12 |
| Vcc | 6 | 6 | 39 | 35 | Vss |
| I/O4 | 7 | 7 | 38 | 34 | I/O11 |
| I/O5 | 8 | 8 | 37 | 33 | I/O10 |
| I/O6 | 9 | 9 | 36 | 32 | I/O9 |
| I/O7 | 10 | 10 | 35 | 31 | I/O8 |
| NC | 11 | 13 | 32 | 30 | NC |
| NC | 12 | 14 | 31 | 29 | $\overline{LCAS}$ |
| $\overline{WE}$ | 13 | 15 | 30 | 26 | $\overline{UCAS}$ |
| $\overline{RAS}$ | 14 | 16 | 29 | 27 | $\overline{OE}$ |
| NC | 15 | 17 | 28 | 26 | A8 |
| A0 | 16 | 18 | 27 | 25 | A7 |
| A1 | 17 | 19 | 26 | 24 | A6 |
| A2 | 18 | 20 | 25 | 23 | A5 |
| A3 | 19 | 21 | 24 | 22 | A4 |
| Vcc | 20 | 22 | 23 | 21 | Vss |

(TOP VIEW)

## ■ EPM032VT-20-001 【JVC】
**(CMOS EEPROM)**

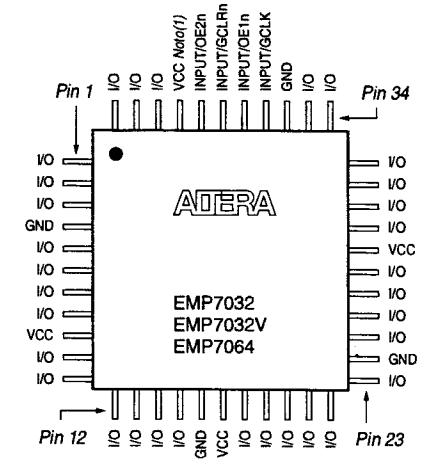


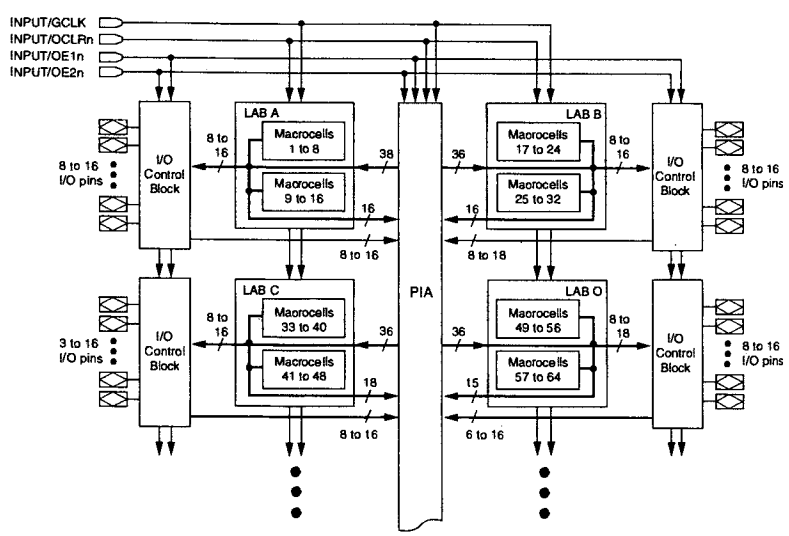


## ■ ICL232CSE 【INTERSIL】
**(+5V Powered Dual RS-232 Trensmitter/ Receiver)**

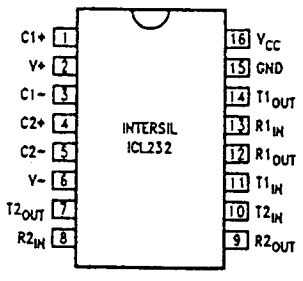


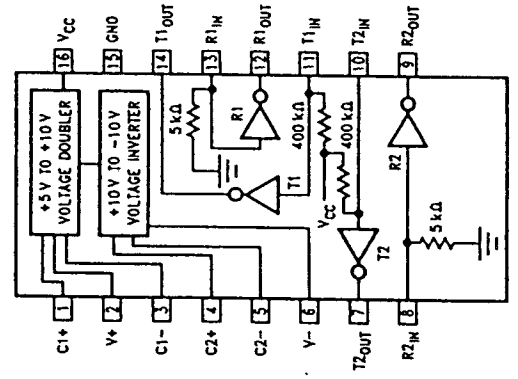

## ■ CXK48324Q 【SDNY】
**(2.4M Bit 3-port Field Memory)**

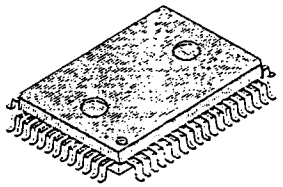

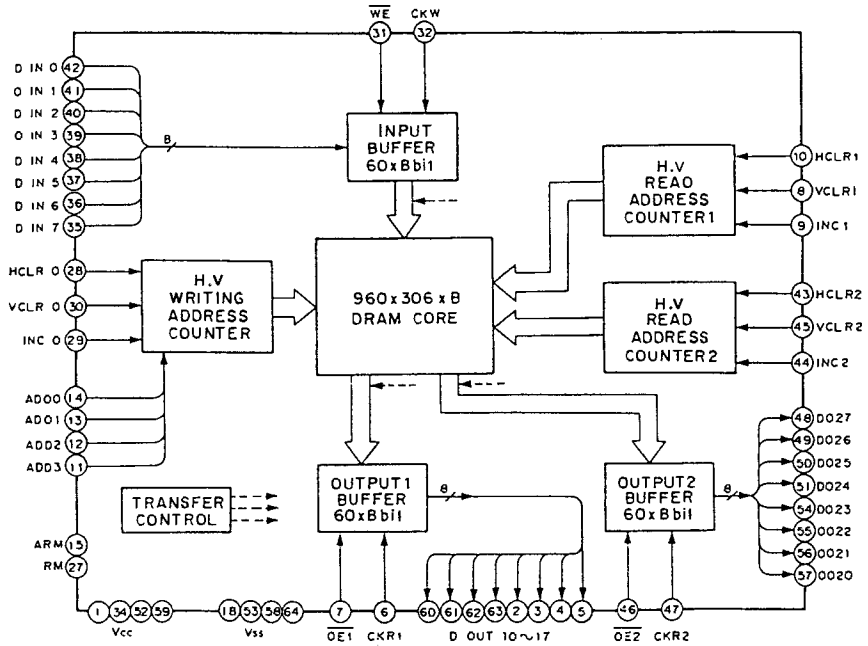


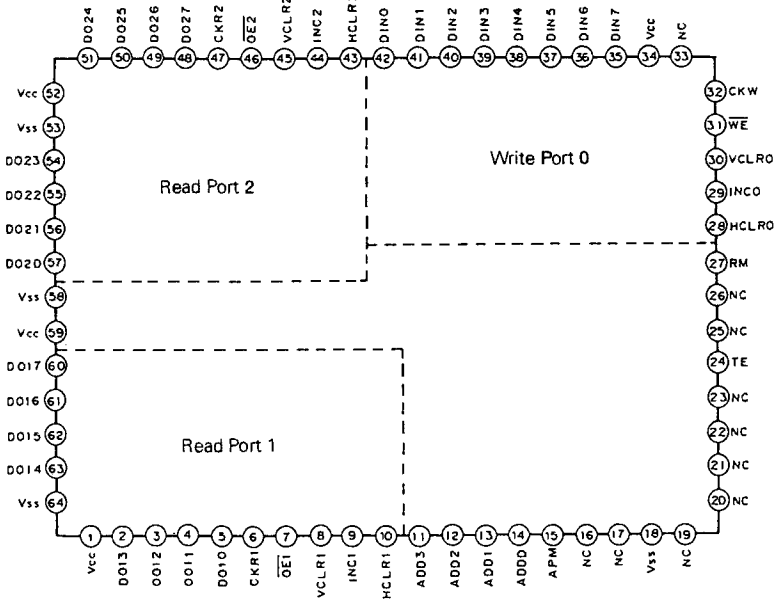


## ■ EL4683CS 【ELANTEC】
**(Video Sync Separator)**

| | | | |
|---|---|---|---|
| FILTER CUT OFF | 1 | 16 | ANALOG GND |
| SET DETECT LEVEL | 2 | 15 | HORIZONTAL SYNC. OUTPUT |
| COMPOSITE SYNC. OUTPUT | 3 | 14 | VDD |
| FILTER INPUT | 4 | 13 | ODD/EVEN OUTPUT |
| VERTICAL SYNC. OUTPUT | 5 | 12 | RSET |
| GND | 6 | 11 | BACK PORCH CLAMP |
| FILTER OUTPUT | 7 | 10 | NO. SIGNAL DETECT. OUTPUT |
| VIDEO INPUT | 8 | 9 | LEVEL OUTPUT |

Note: R SET must be a 1% resistor.

Top View

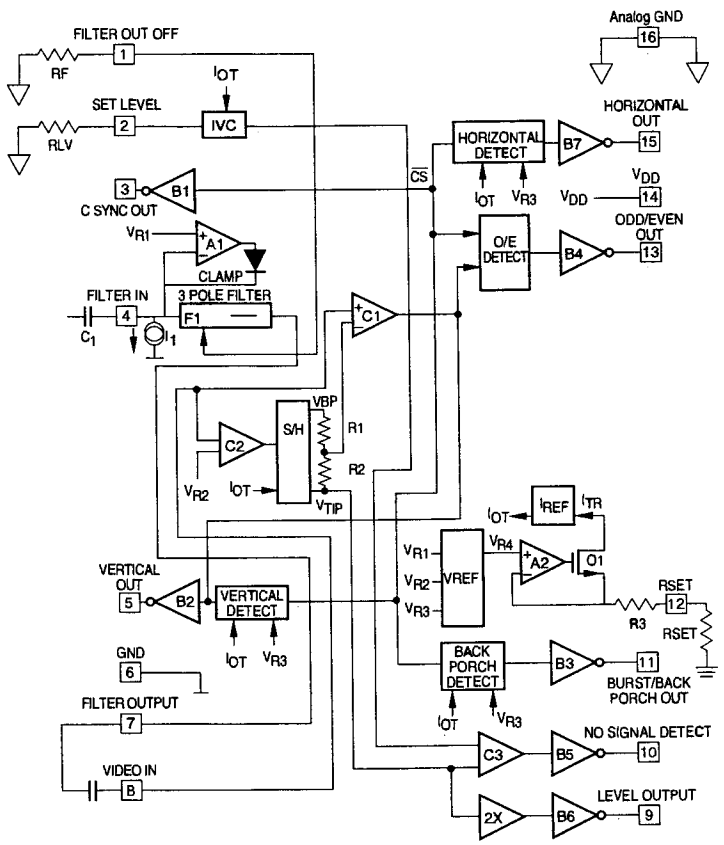


## ■ HD64180ZRF88 【HITACHI】
**(8-bit Micro-Processor)**

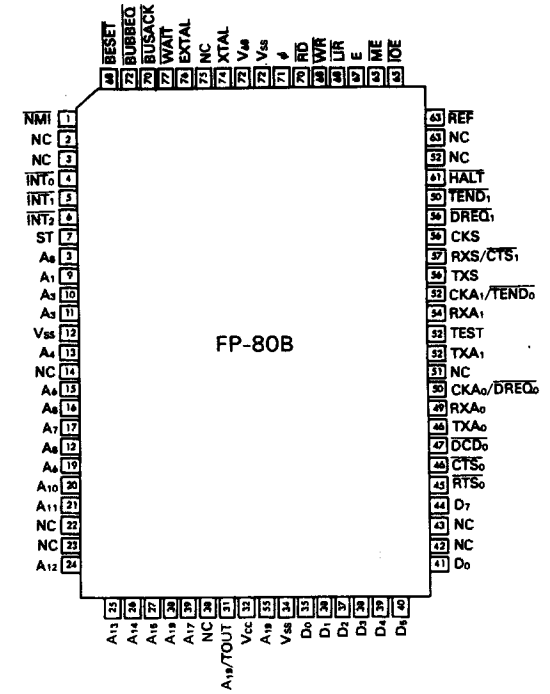


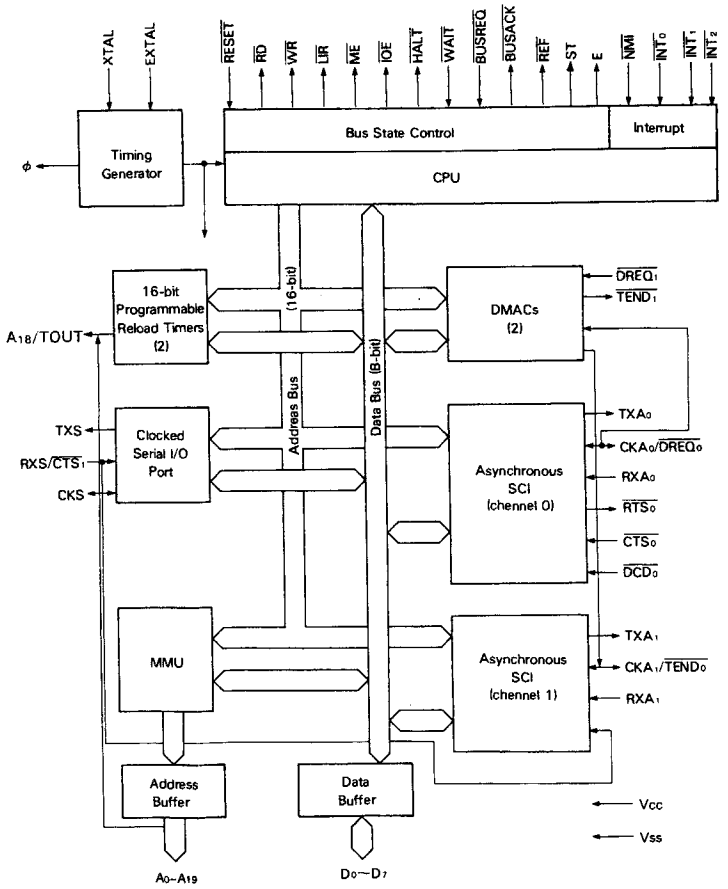



IC-7

## ■ JCL0024 【JVC】
(SSG)

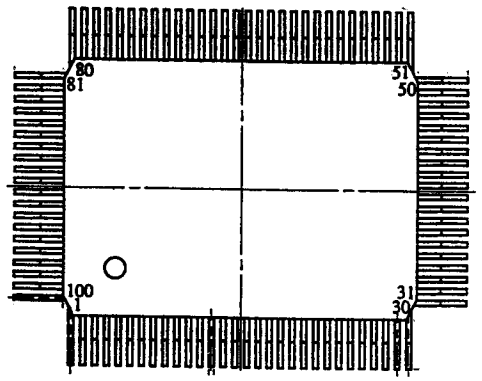


| PIN NO. | Name | I/O | BLOCK TYPE | PIN NO. | Name | I/O | BLOCK TYPE |
|---|---|---|---|---|---|---|---|
| 1 | VDD | - | - | 24 | SYNC | O | FT01 |
| 2 | BD | O | FT01 | 25 | GND | - | - |
| 3 | GND | - | - | 26 | VSYNC | O | FT01 |
| 4 | 2PW | O | FT01 | 27 | VDD | - | - |
| 5 | GND | - | - | 28 | FLD | O | FT01 |
| 6 | BF | O | FT01 | 29 | GND | - | - |
| 7 | VDD | - | - | 30 | GND | - | - |
| 8 | DDF | O | FT01 | 31 | VDD | - | - |
| 9 | GND | - | - | 32 | VDD | - | - |
| 10 | OSYNC | O | FT01 | 33 | LDOX | O | FT01 |
| 11 | GND | - | - | 34 | GND | - | - |
| 12 | GND | - | - | 35 | EDFL | O | FT01 |
| 13 | VDD | - | - | 36 | GND | - | - |
| 14 | VD | O | FT01 | 37 | F | O | FT01 |
| 15 | GND | - | - | 38 | GND | - | - |
| 16 | GND | - | - | 39 | GND | - | - |
| 17 | GND | - | - | 40 | GND | - | - |
| 18 | GND | - | - | 41 | VDD | - | - |
| 19 | GND | - | - | 42 | 4FLP | O | FT01 |
| 20 | VDD | - | - | 43 | GND | - | - |
| 21 | VDD | - | - | 44 | GND | - | - |
| 23 | GND | - | - | 45 | SETUP | O | FT01 |
| 28 | GND | - | - | 46 | VDD | - | - |

| PIN NO. | Name | I/O | BLOCK TYPE | PIN NO. | Name | I/O | BLOCK TYPE |
|---|---|---|---|---|---|---|---|
| 47 | NSYNC | O | FT01 | 70 | GND | - | - |
| 48 | GND | - | - | 71 | RSEL | I | FI02 |
| 49 | 13CKO | O | FT01 | 72 | VDD | - | - |
| 50 | GND | - | - | 73 | TST6 | I | FI02 |
| 51 | VDD | - | - | 74 | TST5 | I | FI02 |
| 52 | 27MCK | I | FI02 | 75 | TST4 | I | FI02 |
| 53 | CND | - | - | 76 | TST3 | I | FI02 |
| 54 | STOP | I | FI02 | 77 | TST2 | I | FI02 |
| 55 | GND | - | - | 78 | TST1 | I | FI02 |
| 56 | DSEL3 | I | FI02 | 79 | TSTC | I | FI02 |
| 57 | DSEL2 | I | FI02 | 80 | GND | - | - |
| 58 | DSEL1 | I | FI02 | 81 | GND | - | - |
| 59 | VDD | - | - | 82 | VR | I | FI02 |
| 60 | NPSEL | I | FI02 | 83 | GND | - | - |
| 61 | CKSEL | I | FI02 | 84 | REPE | O | FT01 |
| 62 | GND | - | - | 85 | VDD | - | - |
| 63 | VDD | - | - | 86 | FV | O | FT01 |
| 64 | GND | - | - | 87 | GND | - | - |
| 65 | MCK | I | FI02 | 88 | GND | - | - |
| 66 | GND | - | - | 89 | FH | O | FT01 |
| 67 | LALTRI | I | FI02 | 90 | GND | - | - |
| 68 | VDD | - | - | 91 | VDD | - | - |
| 69 | RSTB | I | FI02 | 92 | VDO | - | - |

| PIN NO. | Name | I/O | BLOCK TYPE | PIN NO. | Name | I/O | BLOCK TYPE |
|---|---|---|---|---|---|---|---|
| 93 | FF | O | FT01 | 97 | VDD | - | - |
| 94 | GND | - | - | 98 | LALT | O | FT01 |
| 95 | N | O | FT01 | 99 | GND | - | - |
| 96 | VDO | - | - | 100 | GND | - | - |

## ■ JCL0025 【JVC】
(Cempenent Signal Multiplexer)

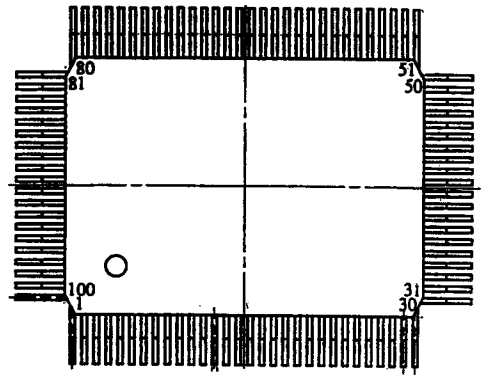


| PIN NO. | Name | I/O | BLOCK TYPE | PIN NO. | Name | I/O | BLOCK TYPE |
|---|---|---|---|---|---|---|---|
| 1 | GND | - | - | 24 | Y4 | B | E00A |
| 2 | VDD | - | - | 25 | Y5 | D | D00A |
| 3 | DLYOND | I | FIU2 | 26 | Y6 | S | B60A |
| 4 | B1TSELA | I | FIU2 | 27 | Y7 | D | B60A |
| 5 | 61TSELD | I | FIU2 | 28 | GND | - | - |
| 6 | GND | - | - | 29 | VDD | - | - |
| 7 | M0 | B | B00A | 30 | GND | - | - |
| 8 | M1 | B | B00A | 31 | R0 | B | B00A |
| 9 | M2 | B | D00A | 32 | R1 | D | D00A |
| 10 | M3 | B | B00A | 33 | M2 | D | B60A |
| 11 | GND | - | - | 34 | 85 | D | D00A |
| 12 | M4 | D | B60A | 33 | GND | - | - |
| 13 | M5 | D | B00A | 36 | E4 | B | B00A |
| 14 | M6 | D | B60A | 37 | B6 | S | E00A |
| 15 | M7 | D | B00A | 38 | R6 | S | D00A |
| 16 | GND | - | - | 30 | R7 | S | B60A |
| 17 | VDD | - | - | 40 | GND | - | - |
| 18 | GND | - | - | 41 | D0 | 6 | D00A |
| 19 | Y0 | B | B00A | 42 | B1 | S | D00A |
| 20 | Y1 | B | B00A | 43 | B2 | D | B00A |
| 21 | Y2 | B | B00A | 44 | B3 | 6 | D00A |
| 22 | Y6 | B | B60A | 45 | GND | - | - |
| 23 | GND | - | - | 46 | B4 | S | B60A |

| PIN NO. | Name | I/O | ELOCK TYPE | PIN NO. | Name | I/O | BLOCK TYPE |
|---|---|---|---|---|---|---|---|
| 47 | R5 | 6 | B00A | 70 | F2 | I | FI02 |
| 48 | B6 | B | B00A | 71 | F1 | I | FI02 |
| 49 | D7 | D | B00A | 72 | H2 | I | FI02 |
| 50 | VDD | - | - | 76 | E1 | I | FI02 |
| 51 | 027M | O | FT01 | 74 | VDD | - | - |
| 52 | VDD | - | - | 75 | GND | - | - |
| 56 | GND | - | - | 76 | 27M2 | I | FI02 |
| 54 | NO | O | FT01 | 77 | OND | - | - |
| 55 | FO | O | FT01 | 78 | 27M1 | I | FI02 |
| 59 | 01B1S | O | FT01 | 76 | VDD | - | - |
| 57 | GNO | O | FT01 | 60 | GND | - | - |
| 53 | GND | - | - | 31 | 1M27 | I | FI02 |
| 69 | VDD | - | - | 32 | 1M25 | I | FI02 |
| 60 | GND | - | - | 85 | 1M25 | I | FI02 |
| 61 | GND | - | - | 34 | 1M24 | I | FI02 |
| 62 | RSTB | I | FIU2 | 85 | 1M23 | I | FI02 |
| 63 | NOMPK | I | FIU2 | 36 | 1M22 | I | FI02 |
| 64 | CSEL | I | FI02 | 87 | 1M21 | I | FI02 |
| 65 | RSEL2 | I | FI02 | 88 | 1M20 | I | FI02 |
| 66 | RSEL | I | FI02 | 89 | GND | - | - |
| 67 | GND | - | - | 00 | VDO | - | - |
| 69 | 1M16M | I | FID2 | 91 | MPC7 | I | FI02 |
| 69 | 1BN | I | FIU2 | 92 | MPC3 | I | FI02 |

| PIN NO. | Name | I/O | BLOCK TYPE | PIN NO. | Name | I/O | BLOCK TYPE |
|---|---|---|---|---|---|---|---|
| 93 | MPC5 | I | FI02 | 97 | MPC1 | I | FI02 |
| 94 | MPC4 | I | FI02 | 98 | MPC0 | I | FI02 |
| 95 | MPC3 | I | FI02 | 99 | GND | - | - |
| 96 | MPC2 | I | FI02 | 100 | NDOE | I | FI02 |

## ■ JCL0026 【JVC】
**(Component Signal Multiplexer)**

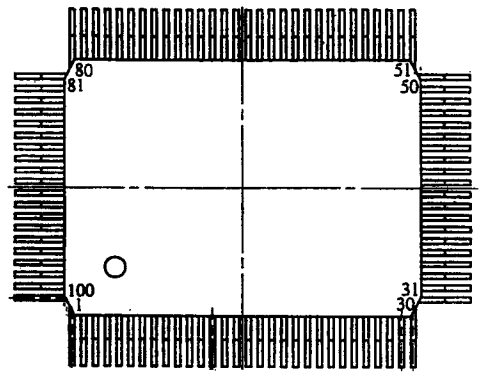


| PIN NO. | Name | I/O | BLOCK TYPE | PIN NO. | Name | I/O | BLOCK TYPE |
|---|---|---|---|---|---|---|---|
| 1 | GND | - | - | 24 | Y4 | I | FI02 |
| 2 | VDD | - | - | 25 | Y5 | I | FI02 |
| 3 | TOUT1 | O | FTO1 | 26 | Y6 | I | FI02 |
| 4 | TOUT2 | O | FTO1 | 27 | Y7 | I | FI02 |
| 5 | N.C. | - | - | 28 | GND | - | - |
| 6 | GND | - | - | 29 | VDD | - | - |
| 7 | MPX0 | O | FTO1 | 30 | GND | - | - |
| 8 | MPX1 | O | FTO1 | 31 | R0 | I | FI02 |
| 9 | MPX2 | O | FTO1 | 32 | R1 | I | FI02 |
| 10 | MPX3 | O | FTO1 | 33 | R3 | I | FI02 |
| 11 | GND | - | - | 34 | R3 | I | FI02 |
| 12 | MPX4 | O | FTO1 | 35 | GND | - | - |
| 13 | MPX5 | O | FTO1 | 36 | R4 | I | FI02 |
| 14 | MPX6 | O | FTO1 | 37 | R5 | I | FI02 |
| 15 | MPX7 | O | FTO1 | 38 | R6 | I | FI02 |
| 16 | GND | - | - | 39 | R7 | I | FI02 |
| 17 | VDD | - | - | 40 | GND | - | - |
| 18 | G0 | - | - | 41 | G0 | I | FI02 |
| 19 | Y0 | I | FIB2 | 42 | G1 | I | FI02 |
| 20 | Y1 | I | FI02 | 43 | G2 | I | FI02 |
| 21 | Y2 | I | FI02 | 44 | G3 | I | FI02 |
| 22 | Y3 | I | FI02 | 45 | GND | - | - |
| 23 | GND | - | - | 46 | B4 | I | FI02 |

| PIN NO. | Name | I/O | BLOCK TYPE | PIN NO. | Name | I/O | BLOCK TYPE |
|---|---|---|---|---|---|---|---|
| 47 | B5 | I | FI02 | 70 | IN1BM | I | FIU2 |
| 48 | B6 | I | FI02 | 71 | CM0 | - | - |
| 49 | B7 | I | FI02 | 72 | 27M2 | I | FI02 |
| 50 | VDD | - | - | 73 | GNB | - | - |
| 51 | Q27M | O | FTO1 | 74 | F1 | I | FI02 |
| 52 | VDD | - | - | 75 | B1 | I | FI02 |
| 53 | GND | - | - | 76 | IBM | I | FI02 |
| 54 | M0 | O | FTO1 | 77 | CND | - | - |
| 55 | F0 | O | FTO1 | 78 | 27M1 | I | FI02 |
| 56 | O1B13 | O | FTO1 | 79 | VDB | - | - |
| 57 | 13CKO | O | FTO1 | 80 | GNB | - | - |
| 58 | CND | - | - | 81 | IM27 | I | FI02 |
| 59 | VDD | - | - | 82 | IM26 | I | FI02 |
| 60 | GND | - | - | 83 | IM25 | I | FI02 |
| 61 | GND | - | - | 84 | IM24 | I | FI02 |
| 62 | RSTB | I | FI02 | 85 | IM23 | I | FI02 |
| 63 | MOMPX | I | FI02 | 86 | IM22 | I | FI02 |
| 64 | CSEL | I | FI02 | 87 | IM21 | I | FI02 |
| 65 | N.C. | - | - | 88 | IM20 | I | FI02 |
| 66 | SEL | I | FI02 | 89 | GNB | - | - |
| 67 | GND | - | - | 90 | VDB | - | - |
| 68 | F2 | I | FI02 | 91 | OSET | I | PI02 |
| 69 | B2 | I | FI02 | 92 | BITSEL0 | I | PI02 |

| PIN NO. | Name | I/O | BLOCK TYPE | PIN NO. | Name | I/O | BLOCK TYPE |
|---|---|---|---|---|---|---|---|
| 93 | BITSEL1 | I | FI02 | 97 | TIN | I | FIU2 |
| 94 | BITSEL2 | I | FI02 | 98 | TEB | I | FIU2 |
| 95 | BITSEL3 | I | FI02 | 99 | CND | - | - |
| 96 | BITSEL4 | I | FI02 | 100 | N.C. | - | - |

## ■ JCL0027 【JVC】
**(Phase Comparetor/Equelized Errer Detecter)**

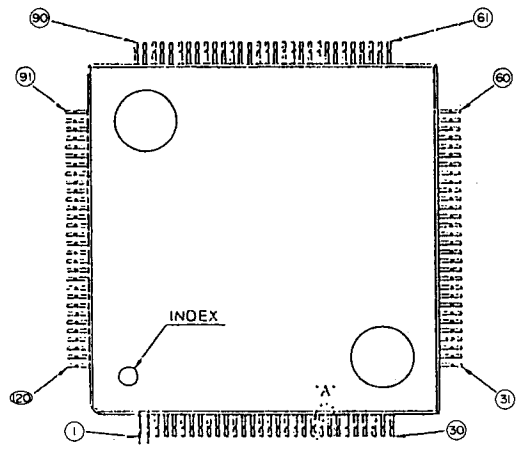


| Pin No. | I/O | Pin Name | Input Level | Pull U/D | Buffer Name | Pin No. | I/O | Pin Name | Input Level | Pull U/D | Buffer Name |
|---|---|---|---|---|---|---|---|---|---|---|---|
| 1 | - | VSS | | | | 51 | - | VSS | | | |
| 2 | I | CK1 | CMOS | | ITCKM | 52 | O | TEST02 | CMOS | | OTCM |
| 3 | O | OVSS1 | | | OVSS | 53 | O | OVSS5 | | | OVSS |
| 4 | I | CK21 | CMOS | | ITCKM | 54 | I | DO2 | CMOS | | ITCH |
| 5 | O | OVSS2 | | | OVSS | 55 | I | HEADSW2 | CMOS | | ITCH |
| 6 | I | CKD1 | CMOS | | ITCKM | 58 | I | RST2 | CMOS | | ITCH |
| 7 | O | OVSS3 | | | OVSS | 57 | I | TESTS2 | CMOS | | ITCH |
| 8 | O | OVSS4 | | | OVSS | 58 | I | TESTI2 | CMOS | | ITCH |
| 9 | O | CTO1 | CMOS | | OTSTM | 59 | O | OVSS8 | | | OVSS |
| 10 | O | CTON1 | CMOS | | OTSTM | 60 | - | VDD(3V) | | | |
| 11 | - | VSS | | | | 61 | - | VSS | | | |
| 12 | O | CTP11 | CMOS | | OTSTM | 62 | I | CK2 | CMOS | | ITCKM |
| 13 | O | CTP1N1 | CMOS | | OTSTM | 63 | O | OVSS7 | | | OVSS |
| 14 | O | CTM11 | CMOS | | OTSTM | 64 | I | CK22 | CMOS | | ITCKM |
| 15 | O | CTM1N1 | CMOS | | OTSTM | 65 | O | OVSS8 | | | OVSS |
| 16 | - | VDD(3V) | | | | 66 | I | CKD2 | CMOS | | ITCKM |
| 17 | O | CTP21 | CMOS | | OTSTM | 67 | O | OVSS9 | | | OVSS |
| 18 | O | CTP2N1 | CMOS | | OTSTM | 63 | O | OVSS10 | | | OVSS |
| 19 | O | CTM21 | CMOS | | OTSTM | 69 | O | CTO2 | CMOS | | OTSTM |
| 20 | O | CTM2N1 | CMOS | | OTSTM | 70 | O | CTON2 | CMOS | | OTSTM |
| 21 | - | VSS | | | | 71 | - | VSS | | | |
| 22 | O | DATAOUT1 | CMOS | | OTCH | 72 | O | CTP12 | CMOS | | OTSTM |
| 23 | O | CKOUT1 | CMOS | | OTCH | 73 | O | CTP1N2 | CMOS | | OTSTM |
| 24 | O | UNL11 | CMOS | | OTCM | 74 | O | CTM12 | CMOS | | OTSTM |
| 25 | O | UNL21 | CMOS | | OTCM | 75 | O | CTM1N2 | CMOS | | OTSTM |
| 26 | O | LOUL1 | CMOS | | OTCM | 76 | - | VDD(3V) | | | |
| 27 | O | FS1 | CMOS | | OTSTM | 77 | O | CTP22 | CMOS | | OTSTM |
| 28 | O | DS1 | CMOS | | OTSTM | 78 | O | CTP2N2 | CMOS | | OTSTM |
| 29 | I | DS11 | CMOS | | ITCH | 79 | O | CTM22 | CMOS | | OTSTM |
| 30 | I | DS21 | CMOS | | ITCH | 80 | O | CTM2N2 | CMOS | | OTSTM |
| 31 | - | VSS | | | | 81 | - | VSS | | | |
| 32 | - | N.C. | | | | 82 | O | DATAOUT2 | CMOS | | OTCH |
| 33 | I | DAINPP2 | | | IDHM | 83 | O | CKOUT2 | CMOS | | OTCH |
| 84 | I | DAINPM2 | | | | 84 | O | UNL12 | CMOS | | OTCM |
| 35 | I | DAINMP2 | | | IDLM | 85 | O | UNL22 | CMOS | | OTCM |
| 36 | I | DAINMM2 | | | | 96 | O | LOUL2 | CMOS | | OTCM |
| 37 | I | ERINP1P2 | | | IDHM | 87 | O | FS2 | CMOS | | OTSTM |
| 38 | I | ERINP1M2 | | | | 88 | O | DS2 | CMOS | | OTSTM |
| 39 | I | ERINOP2 | | | IDAM | 89 | I | DS12 | CMOS | | ITCH |
| 46 | I | ERINOM2 | | | | 90 | I | DS22 | CMOS | | ITCH |
| 41 | - | VSS | | | | 91 | - | VSS | | | |
| 42 | I | ERINM1P2 | | | IDLM | 92 | - | N.C. | | | |
| 43 | I | ERINM1M2 | | | | 93 | I | DAINPP1 | | | IDHM |
| 44 | - | N.C. | | | | 94 | I | DAINPM1 | | | |
| 45 | - | N.C. | | | | 95 | I | DAINMP1 | | | IDLM |
| 46 | - | VDD(3V) | | | | 96 | I | DAINMM1 | | | |
| 47 | O | CHGP2 | CMOS | | OTSTM | 97 | I | ERINP1P1 | | | IDHM |
| 48 | O | DCHGP2 | CMOS | | OTSTM | 98 | I | ERINP1M1 | | | |
| 49 | O | CHGM2 | CMOS | | OTSTM | 99 | I | ERINOP1 | | | IDAM |
| 50 | O | DCHOM2 | CMOS | | OTSTM | 100 | I | ERINOM1 | | | |

| Pin No. | I/O | Pin Name | Input Level | Pull U/D | Buffer Name | Pin No. | I/O | Pin Name | Input Level | Pull U/D | Buffer Name |
|---|---|---|---|---|---|---|---|---|---|---|---|
| 101 | - | VSS | | | | 111 | - | VSS | | | |
| 102 | I | ERINM1P1 | | | IDLM | 112 | O | TEST01 | CMOS | | OTCM |
| 163 | I | ERINM1M1 | | | | 113 | O | OVSS11 | | | OVSS |
| 104 | - | N.C. | | | | 114 | I | DO1 | CMOS | | ITCH |
| 105 | I | VPDIN | | | VPD | 115 | I | HEADSW1 | CMOS | | ITCH |
| 106 | - | VDD(3V) | | | | 116 | I | RST1 | CMOS | | ITCH |
| 107 | O | CHGP1 | CMOS | | OTSTM | 117 | I | TESTS1 | CMOS | | ITCH |
| 109 | O | DCHGP1 | CMOS | | OTSTM | 113 | I | TESTI1 | CMOS | | ITCH |
| 109 | O | CHGM1 | CMOS | | OTSTM | 119 | O | OVSS12 | | | OVSS |
| 110 | O | DCHGM1 | CMOS | | OTSTM | 120 | - | VDD(3V) | | | |


IC-9

## ■ JCL0028 【JVC】
**(8huffling Memory Control)**

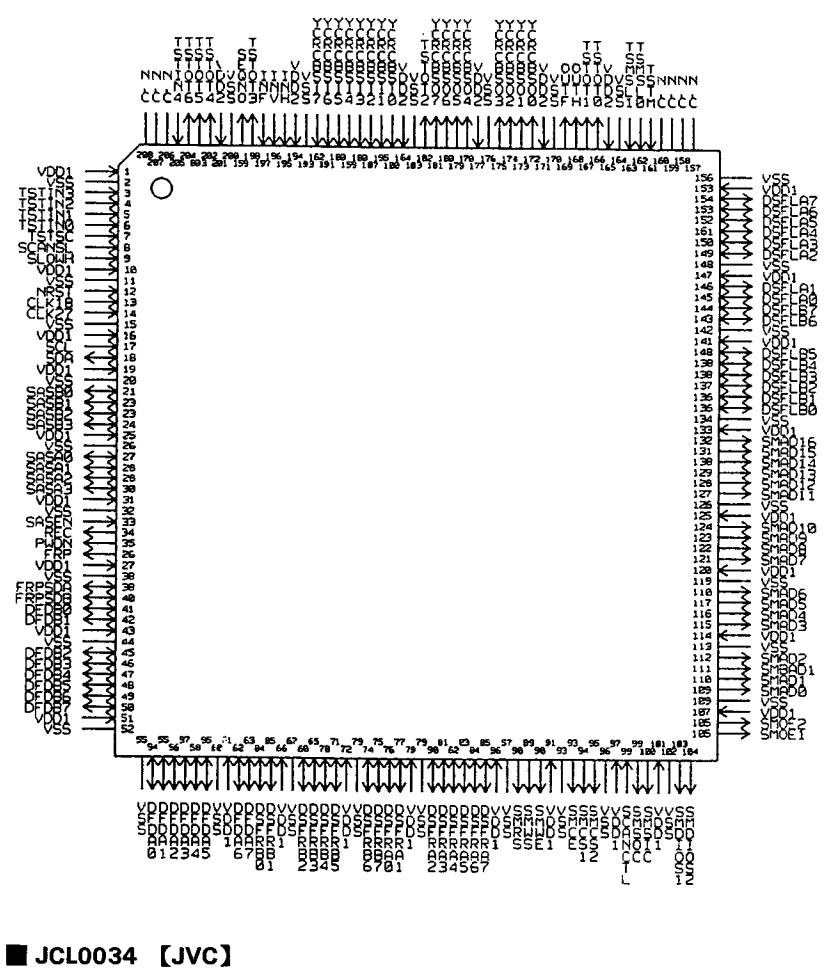

## ■ JCL0029 【JVC】
**(DCI-R Circcuit)**

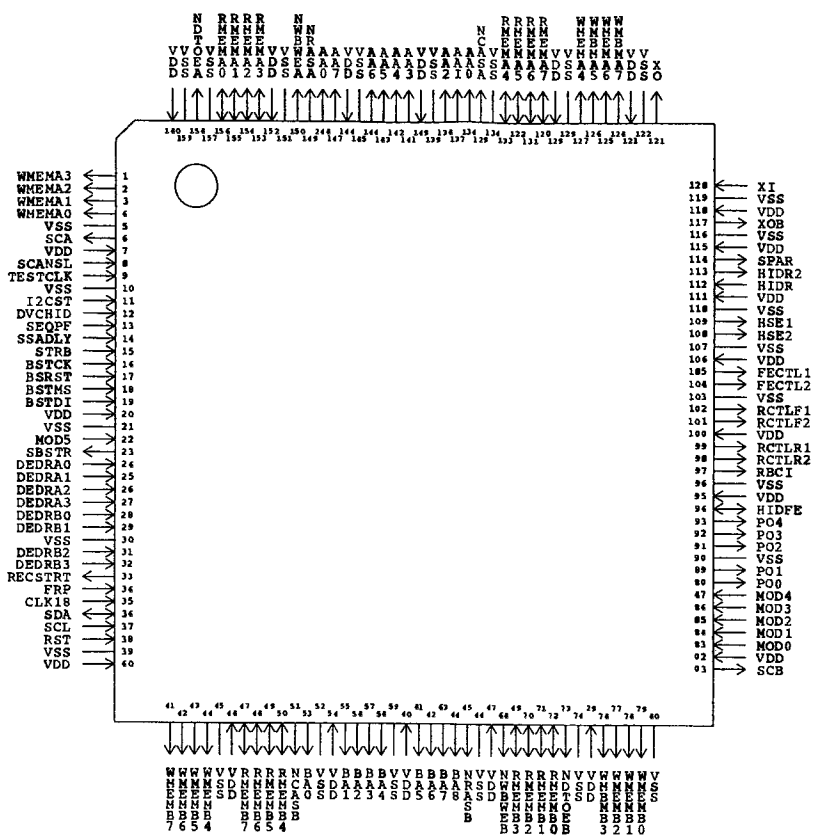

## ■ JCL0030 【JVC】
**(DCI-P Circcuit)**

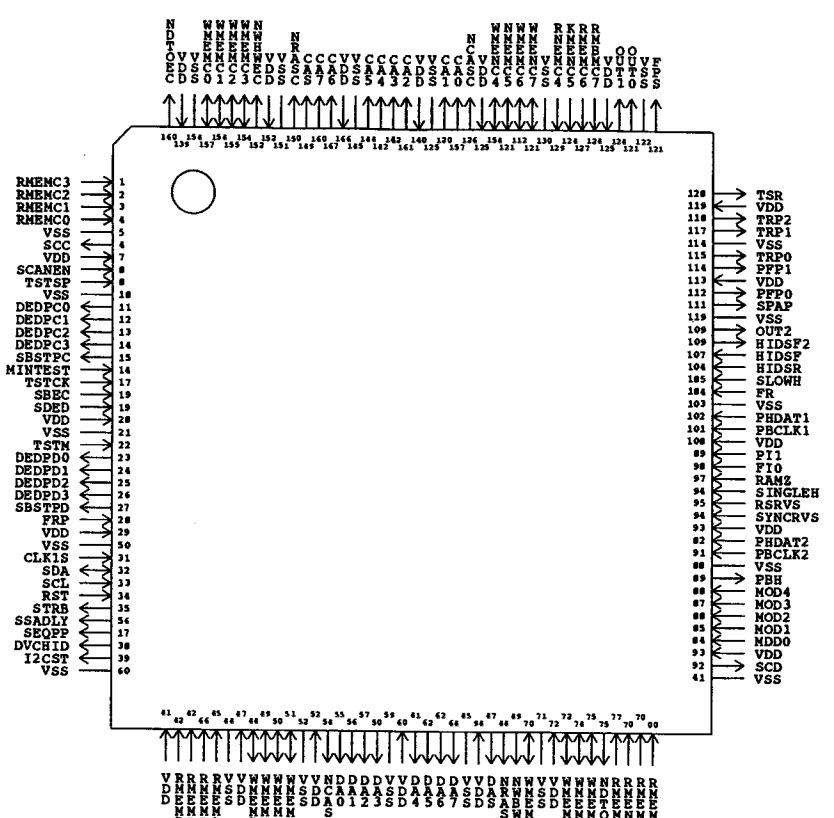

## ■ JCL0034 【JVC】
**(Memory Control)**

| PIN NO. | Name | I/O | BLOCK TYPE | PIN NO. | Name | I/O | BLOCK TYPE |
|---|---|---|---|---|---|---|---|
| 1 | GND | - | - | 24 | BFID | I | FI02 |
| 2 | GND | - | - | 25 | BCLK | I | FI02 |
| 3 | COEBS | O | FT01 | 26 | GND | - | - |
| 4 | COEBF | O | FT01 | 27 | VDD | - | - |
| 5 | CVCR1 | O | FTD1 | 28 | VOC | I | FI02 |
| 6 | CINC1 | O | FTD1 | 29 | V1TCP | I | FI02 |
| 7 | CBCB1 | O | FT01 | 30 | V1TCGEN | I | FI02 |
| 8 | VDD | - | - | 31 | GND | - | - |
| 9 | CKD17 | I | FI02 | 32 | V1TCH | G | FT01 |
| 10 | CKD16 | I | FI02 | 33 | V1TCV | O | FTD1 |
| 11 | CKD15 | I | FI02 | 34 | GND | - | - |
| 12 | CKD14 | I | FI02 | 35 | VDD | - | - |
| 13 | CKD13 | I | FI02 | 36 | VDD | - | - |
| 14 | CRD12 | I | FI02 | 37 | CHEBS | O | FT01 |
| 15 | CKD11 | I | FI02 | 38 | CHEBF | O | FT01 |
| 16 | CKD10 | I | FI02 | 39 | C7CMO | O | FT01 |
| 17 | GND | - | - | 40 | C1NCO | O | FT01 |
| 18 | GND | - | - | 41 | CBCRO | O | FT01 |
| 19 | R27M | I | FI02 | 42 | VDD | - | - |
| 20 | N.C. | - | - | 43 | CKD07 | O | FT01 |
| 21 | N.C. | - | - | 44 | CKD06 | O | FTD1 |
| 22 | RRD | I | FI02 | 45 | CKD05 | O | FT01 |
| 23 | HVD | I | FI02 | 46 | CKD04 | O | FT01 |

| PIN NO. | Name | I/O | BLOCK TYPE | PIN NO. | Name | I/O | BLOCK TYPE |
|---|---|---|---|---|---|---|---|
| 47 | CKD03 | O | FT01 | 70 | FRZE | I | FI02 |
| 48 | CKD02 | O | FT01 | 71 | FRMS | I | FI02 |
| 49 | CKD01 | O | FT01 | 72 | MOSEEN | I | FI02 |
| 50 | CKD00 | O | FT01 | 73 | MODELD | I | FI02 |
| 51 | GND | - | - | 74 | MODECK | I | FI02 |
| 52 | GND | - | - | 75 | MODED | I | FI02 |
| 53 | VDD | - | - | 76 | TBCEN | O | FT01 |
| 54 | FRST | I | FID2 | 77 | CMPL | I | FI02 |
| 55 | GND | - | - | 78 | VDD | - | - |
| 56 | N.C. | - | - | 79 | GND | - | - |
| 57 | N.C. | - | - | 80 | TBCL | I | FID2 |
| 58 | HPREF | I | FID2 | 81 | HWL | I | FI02 |
| 59 | GND | - | - | 82 | DIGF | I | FI02 |
| 60 | HTEST | I | FID2 | 83 | DIGH | I | FI02 |
| 61 | LTEST | I | FID2 | 84 | GND | - | - |
| 62 | VDD | - | - | 85 | HCLK | I | FI02 |
| 63 | VDD | - | - | 86 | VDD | - | - |
| 64 | VDD | - | - | 87 | ADC10 | I | FI02 |
| 65 | GND | - | - | 88 | ADC11 | I | FI02 |
| 66 | GND | - | - | 89 | ADC12 | I | FI02 |
| 67 | GND | - | - | 90 | ADC13 | I | FI02 |
| 68 | FRZEEN | O | FT01 | 91 | ADC14 | I | FI02 |
| 69 | NTSCL | I | FI02 | 92 | ADC15 | I | FI02 |

| PIN NO. | Name | I/O | BLOCK TYPE | PIN NO. | Name | I/O | BLOCK TYPE |
|---|---|---|---|---|---|---|---|
| 93 | ADC16 | I | FI02 | 115 | YECRO | O | FTD1 |
| 94 | ADC17 | I | FI02 | 117 | YINCO | O | FT01 |
| 96 | GVD | - | - | 118 | YYCRO | O | FTD1 |
| 98 | ADY10 | I | FI02 | 119 | YWEBF | O | FT01 |
| 97 | ADY11 | I | FI02 | 120 | YWEBS | O | FT01 |
| 98 | ADY12 | I | FI02 | 121 | GND | - | - |
| 99 | ADY13 | I | FI02 | 122 | GND | - | - |
| 100 | ADY14 | I | FI02 | 123 | GND | - | - |
| 101 | ADY15 | I | FI02 | 124 | GND | - | - |
| 102 | ADY16 | I | FI02 | 125 | GND | - | - |
| 103 | ADY17 | I | FI02 | 126 | VDD | - | - |
| 104 | VDD | - | - | 127 | VDD | - | - |
| 105 | GND | - | - | 128 | YDD | - | - |
| 106 | CND | - | - | 129 | VDD | - | - |
| 107 | YMD00 | O | FT01 | 130 | VDD | - | - |
| 108 | YMD01 | O | FTD1 | 131 | GND | - | - |
| 109 | YMD02 | O | FTD1 | 133 | GND | - | - |
| 110 | YMD03 | O | FT01 | 135 | GND | - | - |
| 111 | YMD04 | O | FT01 | 134 | GND | - | - |
| 112 | YMD05 | O | FT01 | 135 | GND | - | - |
| 113 | YMD00 | O | FTD1 | 136 | VDD | - | - |
| 114 | YMD07 | O | FTD1 | 137 | VDD | - | - |
| 115 | VDD | - | - | 138 | VDD | - | - |

| PIN NO. | Name | I/O | BLOCK TYPE | PIN NO. | Name | I/O | BLOCK TYPE |
|---|---|---|---|---|---|---|---|
| 139 | VDD | - | - | 162 | CPNYS | O | FTD1 |
| 140 | VDD | - | - | 163 | CPNY2 | O | FT01 |
| 141 | YMD10 | I | FI02 | 164 | CPNY1 | O | FTD1 |
| 142 | YMD11 | I | FI02 | 169 | CPNY0 | O | FTD1 |
| 143 | YMD12 | I | FI02 | 166 | CND | - | - |
| 144 | YMD13 | I | FI02 | 167 | CBLK | O | FT01 |
| 145 | YMD14 | I | FI02 | 168 | VDD | - | - |
| 146 | YMD15 | I | FI02 | 169 | VDD | - | - |
| 147 | YMD16 | I | FI02 | 170 | VDD | - | - |
| 148 | YMD17 | I | FI02 | 171 | VDD | - | - |
| 149 | VDD | - | - | 172 | GND | - | - |
| 150 | YRCB1 | O | FTD1 | 173 | CPNC7 | O | FT01 |
| 151 | YINC1 | O | FTD1 | 174 | CPNC6 | O | FT01 |
| 153 | YYCE1 | O | FTD1 | 175 | CPNC5 | O | FTD1 |
| 153 | YG96F | O | FT01 | 176 | CPNC4 | O | FT01 |
| 154 | YOEBS | O | FT01 | 177 | CPNC3 | O | FT01 |
| 155 | GND | - | - | 178 | CPNC2 | O | FTD1 |
| 156 | GND | - | - | 179 | CPNC1 | O | FT01 |
| 157 | VDD | - | - | 186 | CPNC0 | O | FT01 |
| 158 | CPNY7 | O | FT01 | 181 | CPND9 | O | FT01 |
| 159 | CPNY8 | O | FTD1 | 182 | GND | - | - |
| 180 | CPNY5 | O | FT01 | 183 | VDD | - | - |
| 181 | CPNY4 | O | FT01 | 184 | CPSC7 | O | FTD1 |

| PIN NO. | Name | I/O | BLOCK TYPE | PIN NO. | Name | I/O | BLOCK TYPE |
|---|---|---|---|---|---|---|---|
| 195 | CPSC6 | O | FT01 | 197 | VDD | - | - |
| 196 | CPSC5 | O | FT01 | 198 | HPREF | I | FID2 |
| 197 | CPSC4 | O | FTD1 | 199 | GND | - | - |
| 198 | CPSCD | O | FT01 | 200 | MPD7 | O | FT01 |
| 199 | CPSC2 | O | FTD1 | 201 | MPD6 | O | FT01 |
| 190 | CPSC1 | O | FT01 | 202 | MPD5 | O | FT01 |
| 191 | CPSCD | O | FT01 | 203 | MPD4 | O | FT01 |
| 192 | CPSBE | O | FT01 | 204 | MPD3 | O | FT01 |
| 193 | CND | - | - | 205 | MPD2 | O | FT01 |
| 194 | CND | - | - | 206 | MPD1 | O | FT01 |
| 195 | CND | - | - | 207 | MPD0 | O | FT01 |
| 196 | GND | - | - | 200 | VDD | - | - |

## ■ L7A1433 【LSI LOGIC】
(ECC)

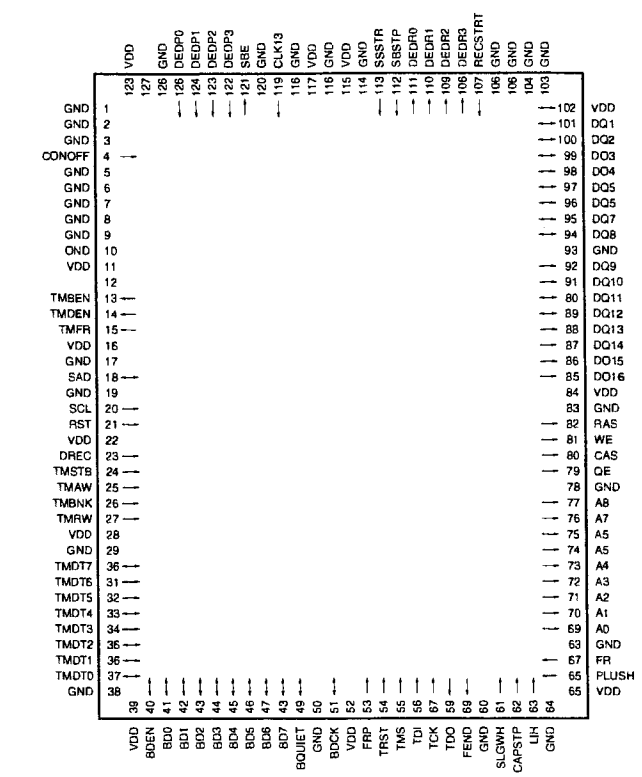


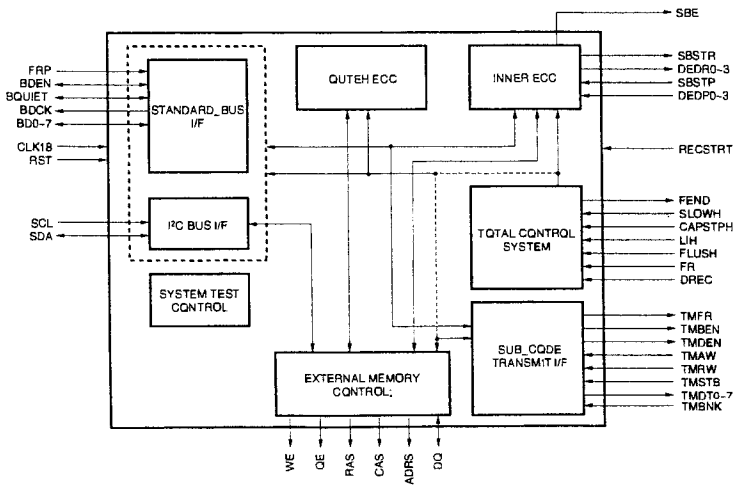


## ■ LM31BM 【NATIONAL SEMICONDUCTOR】
(Operational Amplifiers)

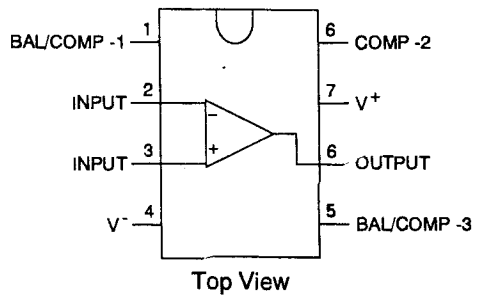

Top View

## ■ LM360M 【NATIONAL SEMICONDUCTDR】
(High Speed Differential Comparator)

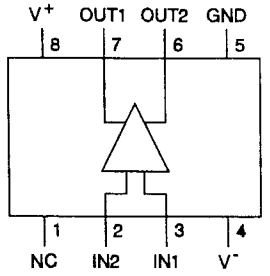

Top View

## ■ LM63B1M 【NATIONAL SEMICONDUCTOR】
(High Speed Op. Amplifier)

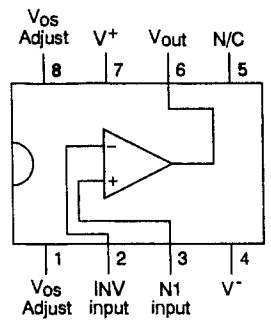

Top View

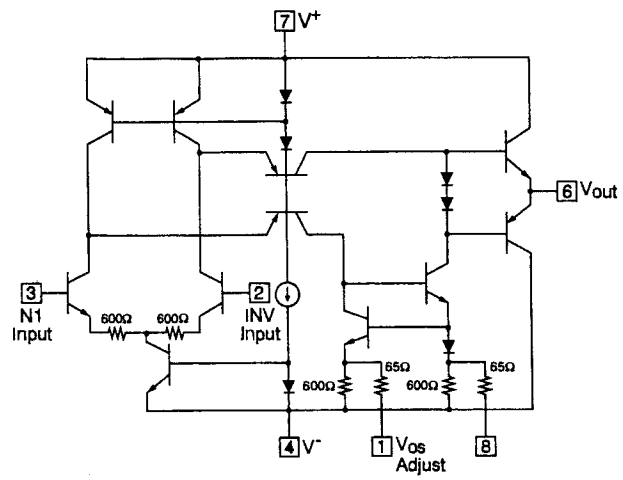


## ■ LM79L12ACM 【NATIONAL SEMICONDUCTOR】
(Refer to LM79L05ACM.)

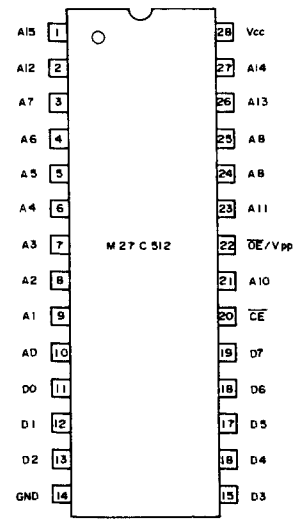


## ■ LM79L05ACM 【NATIONAL SEMICONDUCTOR】
(3-Terminal Negative Regulators)

## ■ M27C512-15F1 【MITSUBISHI】
(5242SS Bit Programmed EPROM)

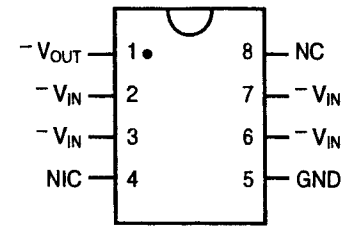


## ■ M50255P 【MITSUBISHI】
(1B Bit Serial/Parallel Converter)

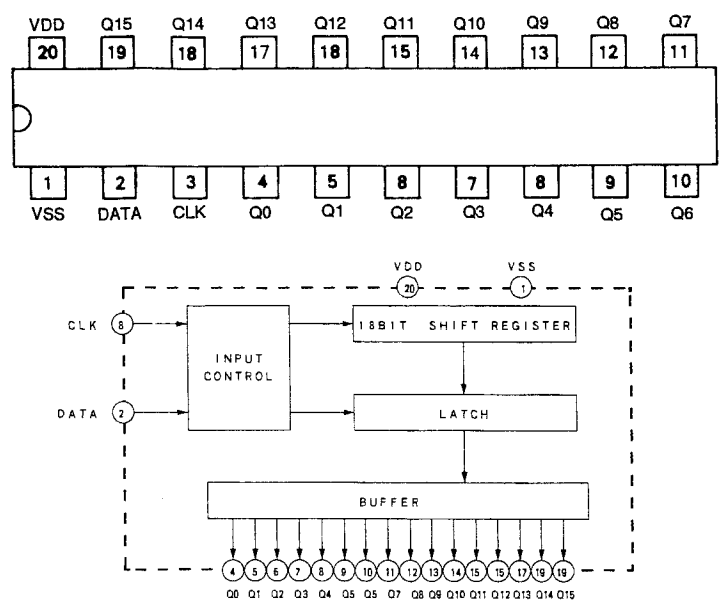


## ■ M51957BFP 【MITSUBISHI】
(Voltage Detector/System Reset)

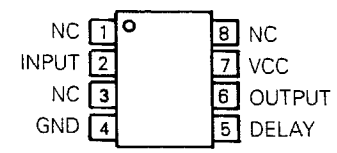


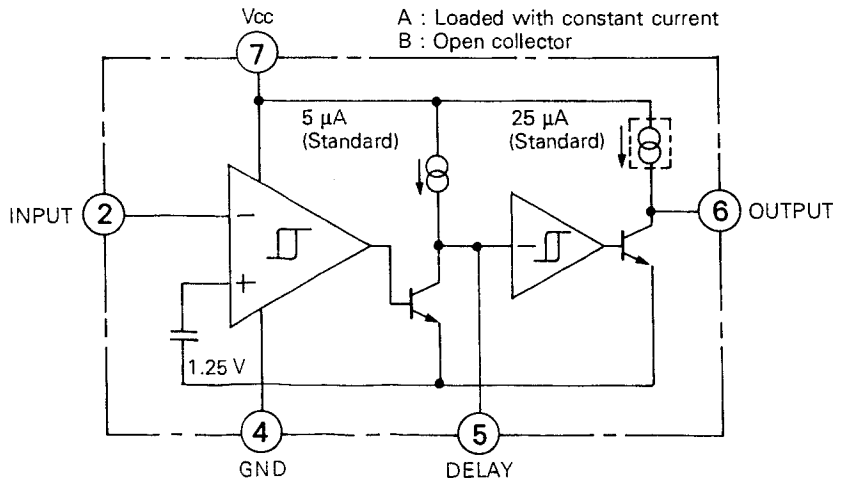



IC-11

## ■ M52880FP 【MITSUBISHI】
(3ch VCD)

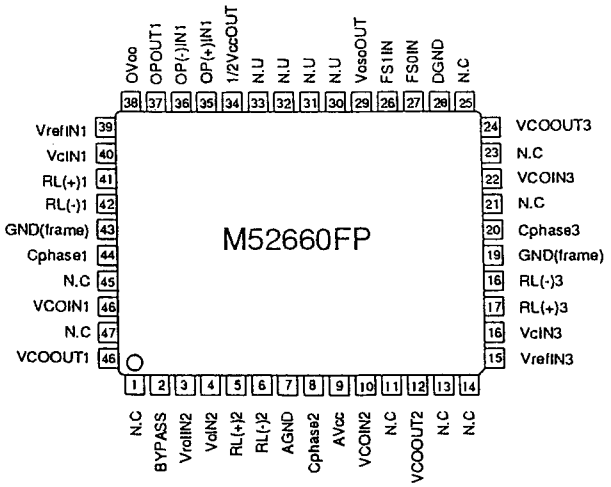


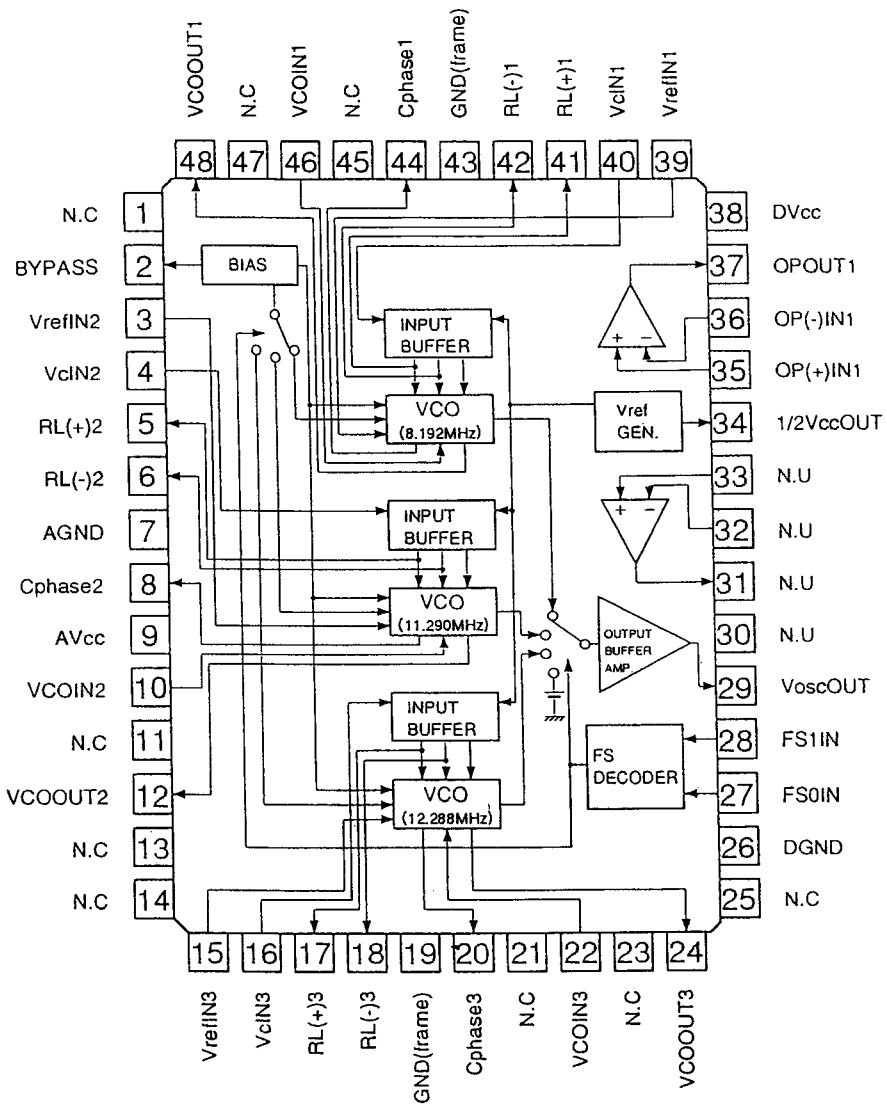


## ■ M5278L12 【MITSUBISHI】
(3 Terminal Positive Voltege R
(+12V))

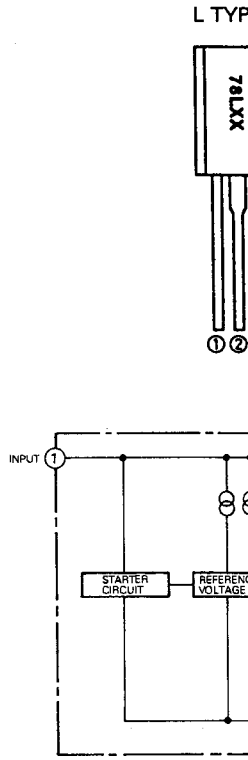


## ■ M82352FP 【MITSUBISHI】
(8 Bit 12CH D/A Converter)

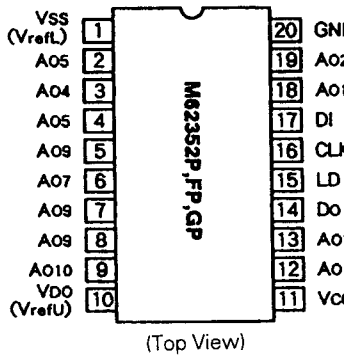

(Top View)

## ■ M62353GP 【MITSUBISHI】
(B-Bit B-Channel D/A Converter)

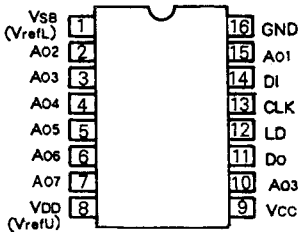

(TOP VIEW)

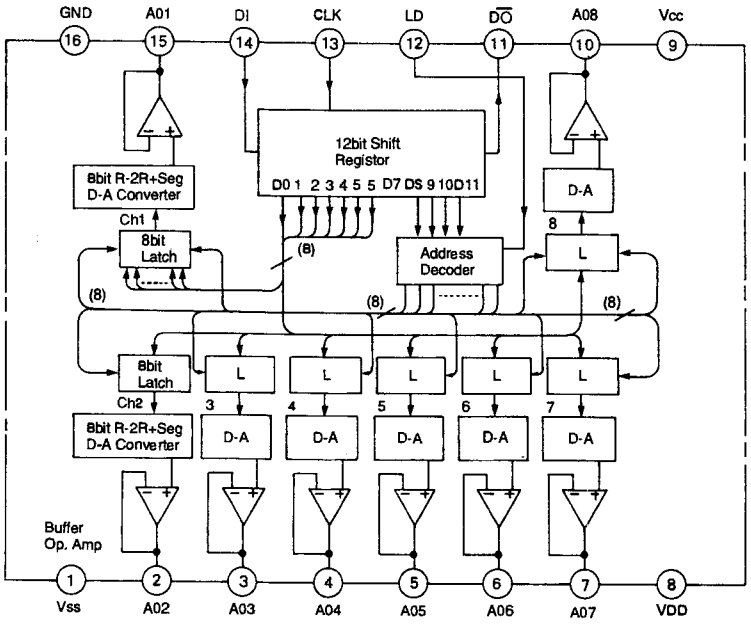


## ■ M62364FP 【MITSUBISHI】
(B-Bit 6-Channel D/A Converter)

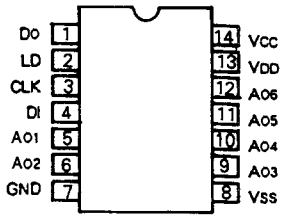

(TOP VIEW)

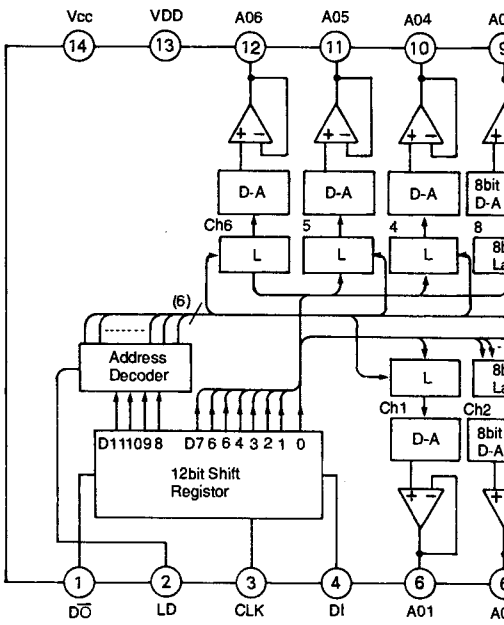


## ■ MC10H107M 【MOTOROLA】
(Triple 2-Input Exclusive "OR"/ Exclusive "NOR")

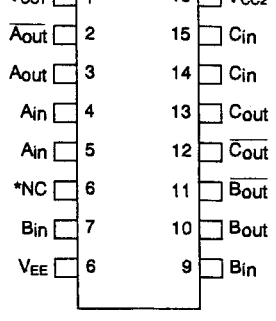

Top View
*NC=No Connection

## ■ MC10H116M 【MOTOROLA】
(Triple Line Receiver)

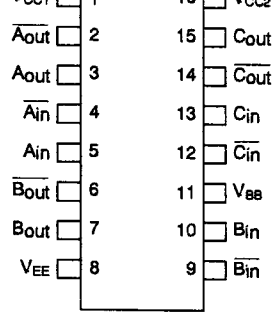

Top View

## ■ MC10H124M
(Quad TTL-TO-

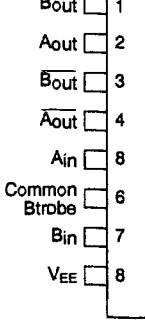

To

## ■ M55401FP 【MITSUBISHI】
(AUDIO-P2)

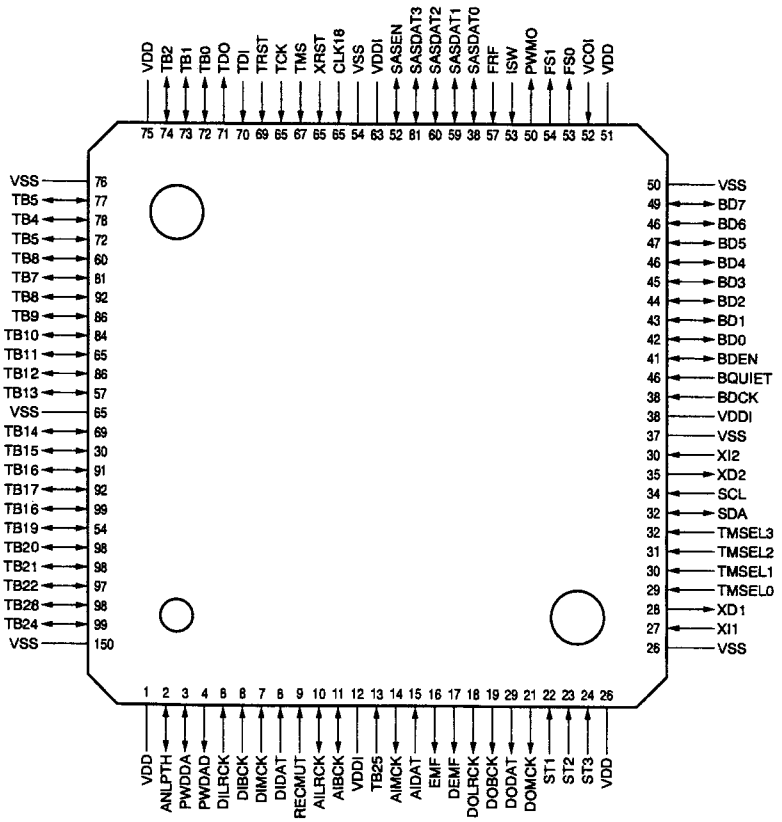


| Pin Number | Pin Name | Function |
|---|---|---|
| 1 | VDD | Outer Power |
| 2 | ANLPTH | Analog loop through(H:threugh) |
| 3 | PWDDA | Power down for DAC(L:power down) |
| 4 | PWDAD | Power down for ADC(L:power down) |
| 5 | DILRCK | L/R clock from Digital In |
| 6 | DIBCK | Bit clock from Digital In |
| 7 | DIMCK | Master olcok from Digital In |
| 6 | DIDAT | Serial Data from Digital In |
| 9 | RECMUT | Rec Data Mute |
| 10 | AILRCK | L/R clock for ADC |
| 11 | AIBCK | Bit clock for ADC |
| 12 | VDDI | Inner Power |
| 13 | TB[25] | Test Bus |
| 14 | AIMCK | Master clk for ADC(266 • fs) |
| 16 | AIDAT | Serial Data from ADC |
| 16 | EMP | ADC emphasis control |
| 17 | DEMP | DAC De-emphasie control |
| 16 | DOLRCK | L/R olock for DAC/D-OUT |
| 19 | DOBCK | Bit clock for DAC/D-OUT |
| 20 | DODAT | Serial Data for DAC/D-OUT |
| 21 | DOMCK | Mastar olock for DAC/D-OUT(256 • fs) |
| 22 | ST1 | Scan Tast Mode Select(L:eneble) |
| 23 | ST2 | Scan Test Clook |
| 24 | ST3 | Scan Test Date Input |
| 26 | VDD | Cuter Power |
| 26 | VSS | GND |
| 27 | XI1 | 12.286MHz X'tal port(48kHz) |
| 26 | XO1 | 12.288MHz X'tel port(48kHz) |
| 29 | TMSEL[0] | Test Mode Select |
| 30 | TMSEL[1] | Test Mode Select |
| 31 | TMSEL[2] | Test Mode Select |
| 32 | TMSEL[3] | Test Mode Select |
| 33 | SDA | I2C data line |
| 34 | SCL | I2C clock line |
| 35 | XO2 | 6.192MHz X'tal port(32kHz) |
| 36 | XI2 | 6.192MHz X'tal port(32kHz) |
| 37 | VSS | GND |
| 36 | VDDI | Innar Power |
| 39 | BDCK | DVC bus olock |
| 40 | BQUIET | DVC bus control |
| 41 | BDEN | DVC bus enable |
| 42 | BD[0] | DVC bus data |
| 43 | BD[1] | DVC bus data |
| 44 | BD[2] | DVC bus data |
| 45 | BD[3] | DVC bus data |
| 48 | BD[4] | DVC bus data |
| 47 | BD[5] | DVC bus data |
| 48 | BD[6] | DVC bus data |
| 49 | BD[7] | DVC bus data |
| 50 | VSS | GND |

## ■ MC34051P 【MOTOROLA】
**(Dual EIA-422/423 Transoeiver)**

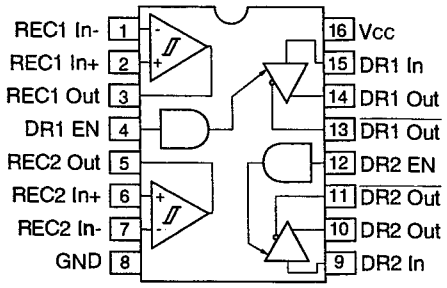


**RECEIVER BLOCK DIAGRAM**

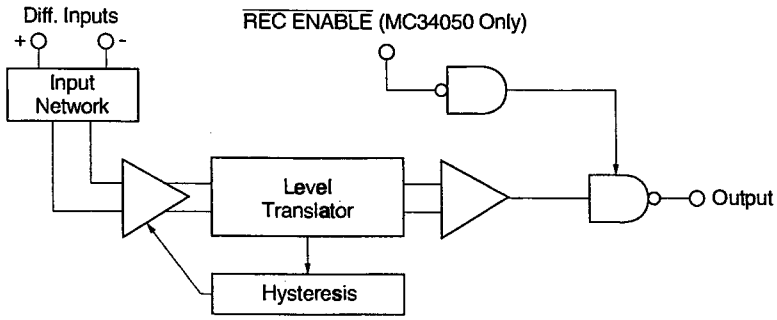


**DRIVRE BLOCK DIAGRAM**

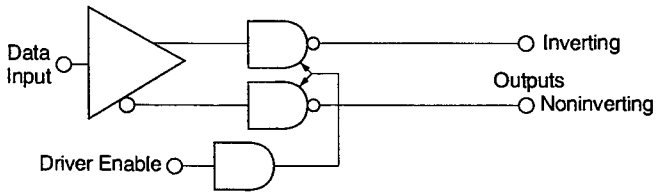


## ■ MM74HC4046M
**【NATIONAL SEMICONDUCTOR】**
**(CMOS Phase Lock Loop)**

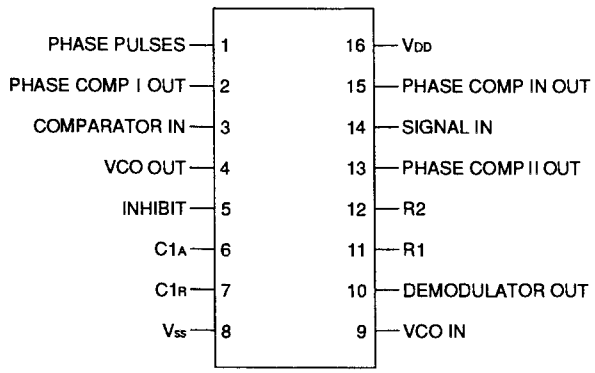


Top View

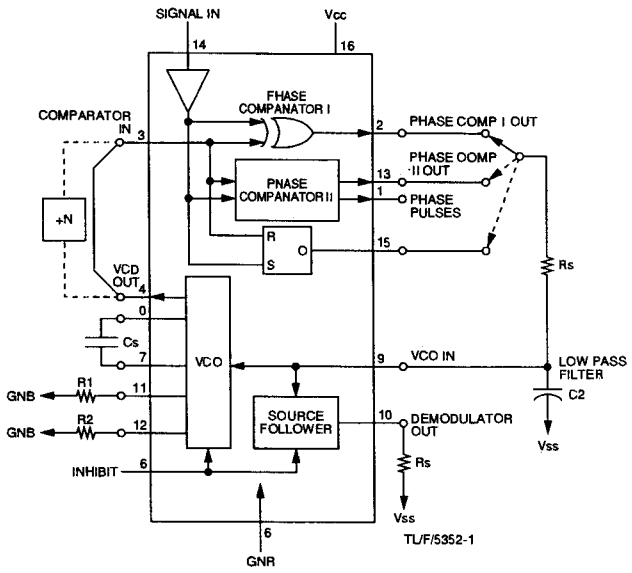


## ■ MN67371F 【MATSUSHITA】
**(SD-DVC Format Vidoo Compression/ Deoompression LSI)**

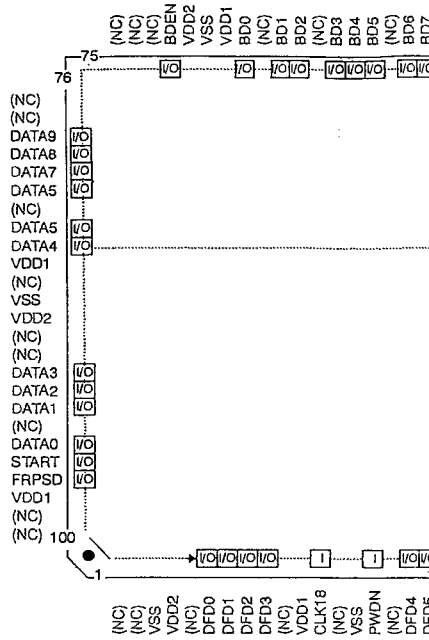

## ■ M8M0338M8 【OKI】
**(Digital Peak Detector for PCM Audio)**

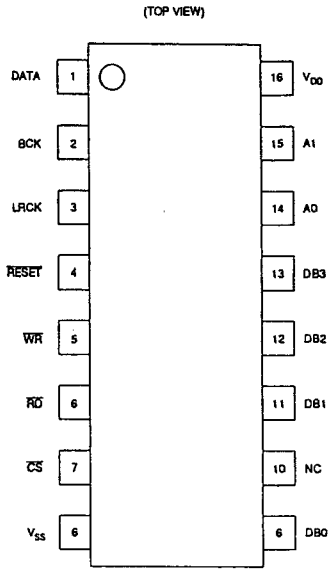


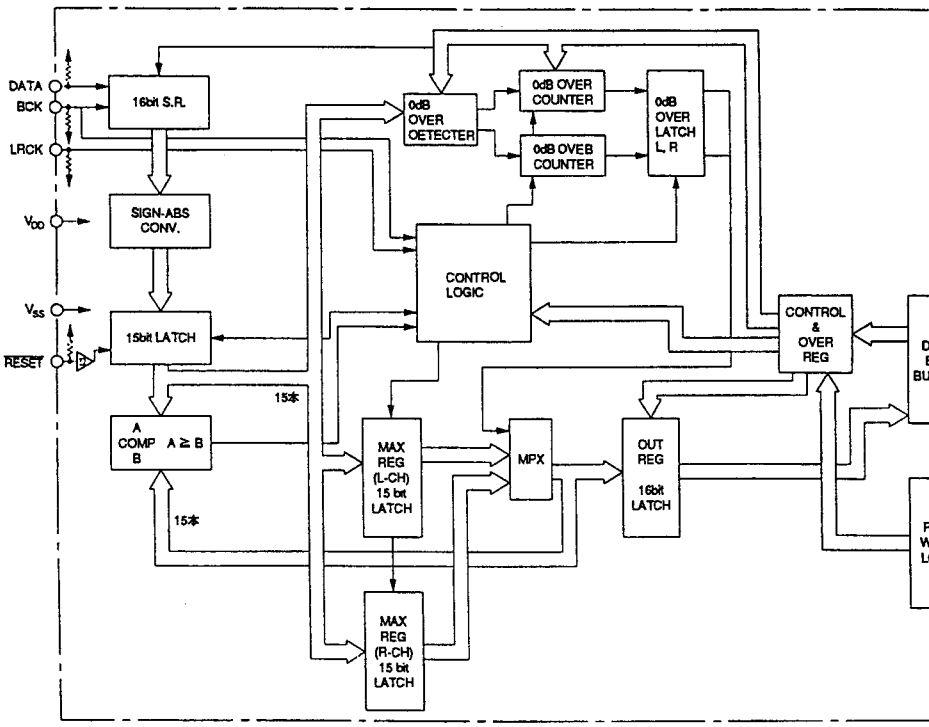


## ■ NJM2234M 【JRC】
**(3 Input 8ingle Video 8witch)**

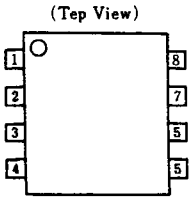


1. $V_{in}1$
2. SW1
3. $V_{in}2$
4. SW2
5. $V_{in}3$
6. $V^+$
7. $V_{out}$
8. GND

## ■ NJM7805FA 【JRC】
**(3-Terminal Positive Voltage Regulator (+5V))**

1. OUT
2. GND
3. IN

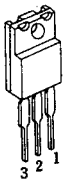


NJM7000FA

## ■ NJM4580M 【JRC】
**(Dual Op.Amp)**

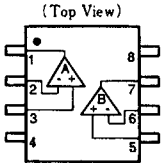


1. A OUTPUT
2. A−INPUT
3. A+INPUT
4. V
5. B+INPUT
8. B−INPUT
7. B OUTPUT
8. V·

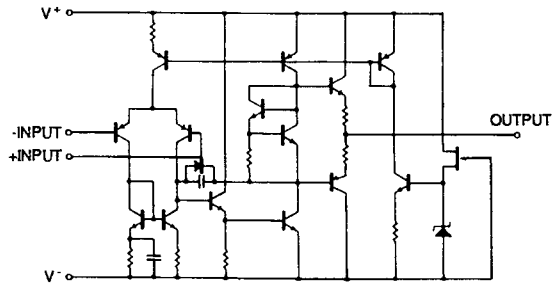


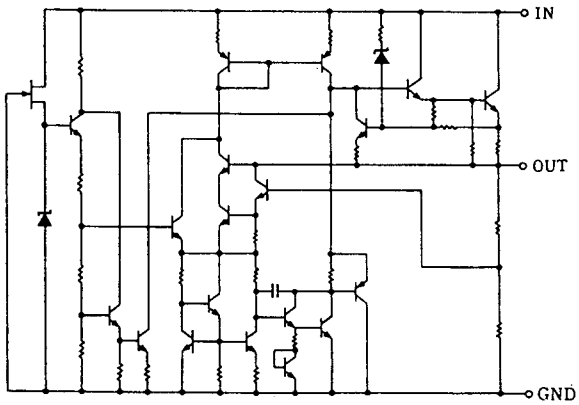


## ■ NJM79L12UA 【JRC】
**(Refer to NJM79L05UA.)**

## ■ SC7B14BGF-02S 【JVC】
**(B-Bit Micro Cemputer)**

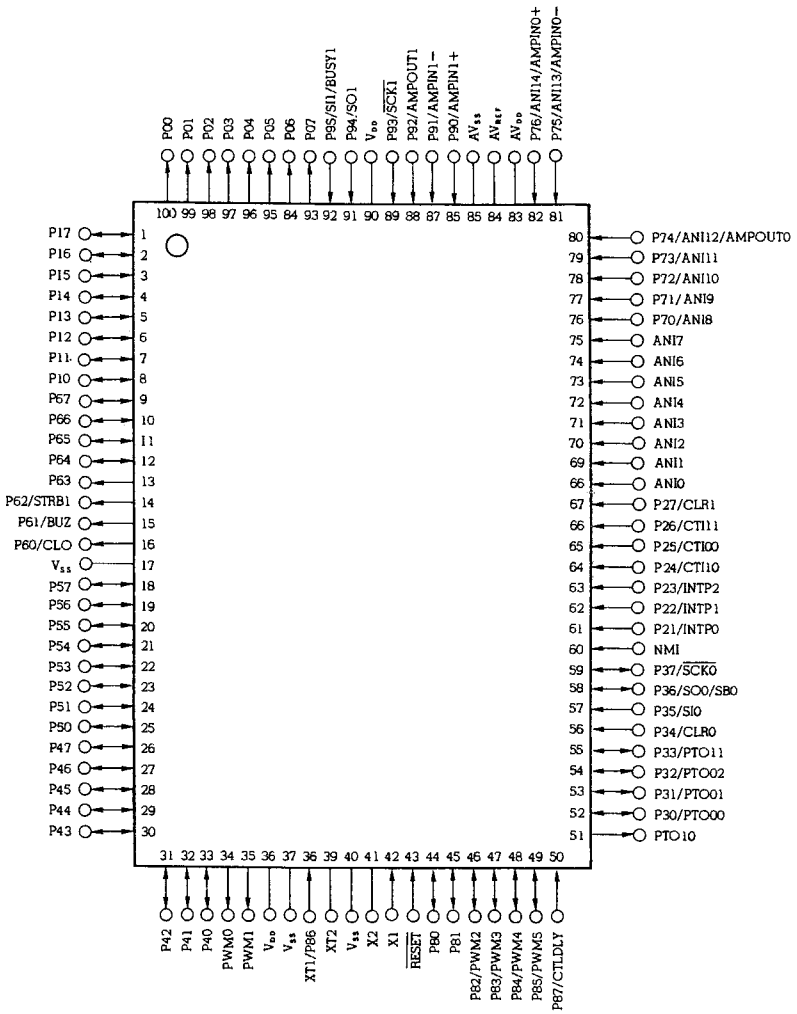


## ■ SN74CBT3245PW 【TEXAS】
**(S Bit Cross Bar Switch)**

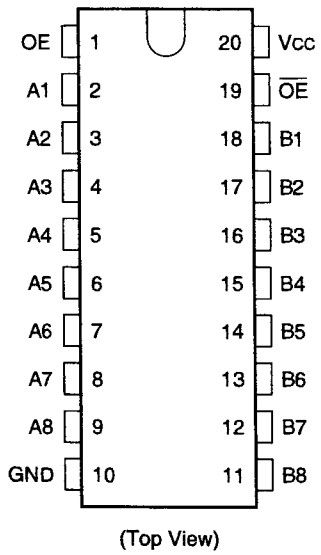


(Top View)

| Inputs | | Inputs/Outputs |
|---|---|---|
| OE | $\overline{OE}$ | A, B |
| X | L | A=B |
| H | X | A=B |
| L | H | Z |

H : High Level
L : Low Level
X : Don't Care
Z : High Impedance

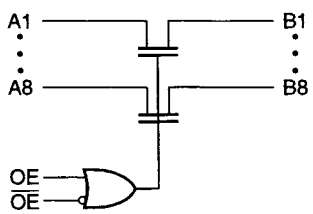


## ■ SN74CBT33S4PW 【TEXAS】
**(10 Bit Crose Ber Switch)**

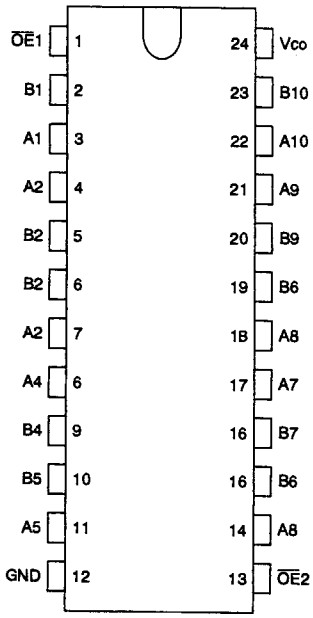


Tep View

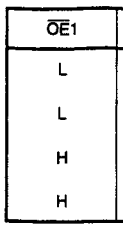


H : High L
L : Low L
X : Don't
Z : High I

A1
A5

OE1
A6
A10

OE2

## ■ SSI32FB001 【TDK】
**(Lew-Power Progremmeble Electronic Filter)**

BLOCK DIAGRAM

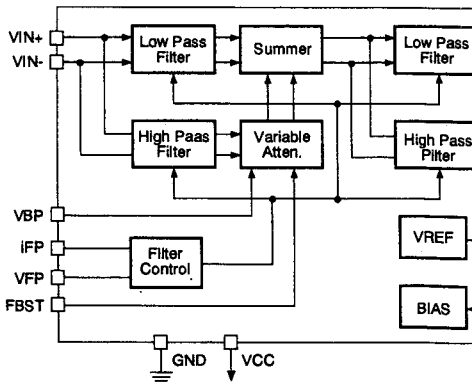

## ■ TAB509F 【TOSHIBA】
**(4-Ch PRE AMP)**

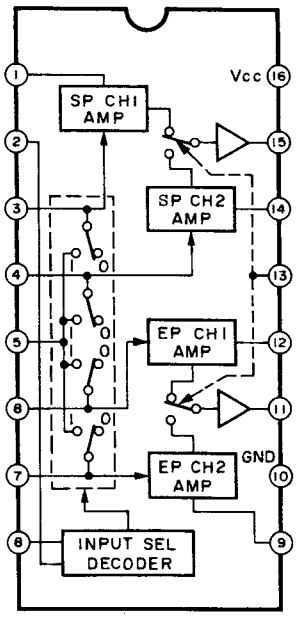


## ■ TC4013BF 【TOSHIBA】
**(Dual D-Type Flip Flop)**

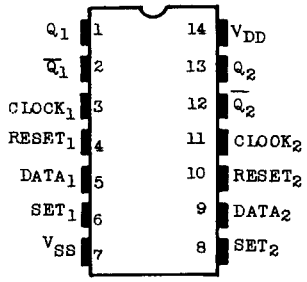


(TOP VIEW)

BLGCK DIAGRAM

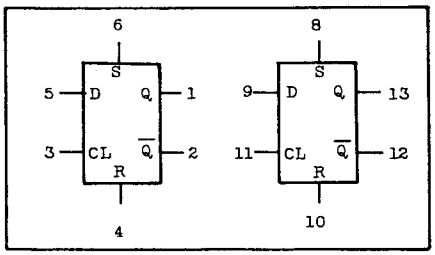


**TRUTH TABLE**

| INPUTS | | | | OUTPUTS | |
|---|---|---|---|---|---|
| RESET | SET | DATA | CLOCK △ | Qn+1 | Q̄n+1 |
| L | H | ※ | ※ | H | L |
| H | L | ※ | ※ | L | H |
| H | H | ※ | ※ | H | H |
| L | L | L | ↓ | L | H |
| L | L | H | ↓ | H | L |
| L | L | ※ | ↑ | Qn• | Q̄n• |

※ : Don't Care
△ : Level Change
• : No Change

## ■ TC4021BF 【TOSHIBA】
**(8 Stage Static Shift Register)**

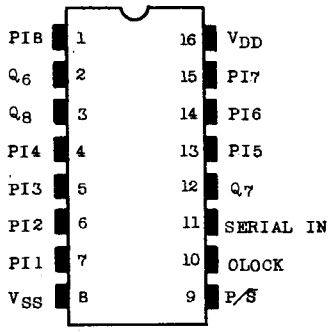


(TOP VIEW)

**TRUTH TABLE**

| INPUTS | | | | | OUTPUTS △ | |
|---|---|---|---|---|---|---|
| CLOCK △△ | P/S | PI1 | PIn | SI | Q1 | Qn |
| ↓ | L | ※ | ※ | L | L | Qn−1 |
| ↓ | L | ※ | ※ | H | H | Qn−1 |
| ↑ | L | ※ | ※ | ※ | No Change | |
| ※ | H | L | L | ※ | L | L |
| ※ | H | L | H | ※ | L | H |
| ※ | H | H | L | ※ | H | L |
| ※ | H | H | H | ※ | H | H |

n : 2 ~ 8
△ : Q1 ~ Q5 Internal
△△ : Level
※ : Don't Care

LOGIC DIAGRAM

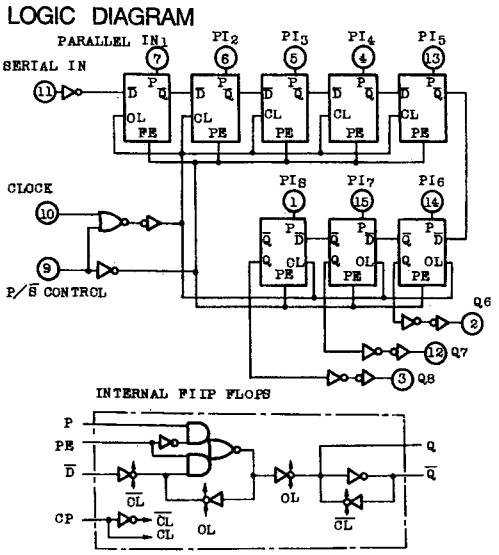


## ■ TC4053BF 【TOSHIBA】
**(Triple 2 Channel Anelog Multiplexers/ Oemultiplexers)**

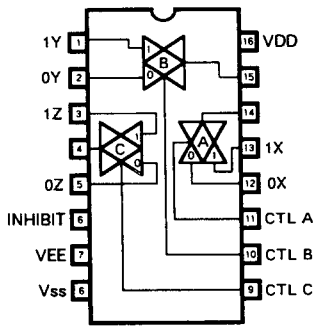


(TOP VIEW)

**TRUTH TABLE**

| CONTROL INPUTS | | | | "ON" CHANNEL |
|---|---|---|---|---|
| INHIBIT | C | B | A | 4053BP 4053BF |
| L | L | L | L | 0X, 0Y, 0Z |
| L | L | L | H | 1X, 0Y, 0Z |
| L | L | H | L | 0X, 1Y, 0Z |
| L | L | H | H | 1X, 1Y, 0Z |
| L | H | L | L | 0X, 0Y, 1Z |
| L | H | L | H | 1X, 0Y, 1Z |
| L | H | H | L | 0X, 1Y, 1Z |
| L | H | H | H | 1X, 1Y, 1Z |
| H | * | * | * | NOTE |

* Don't Care.

## ■ TC4094BF 【TOSHIBA】
**(B Stage Bus Compatible Shift/Store Register)**

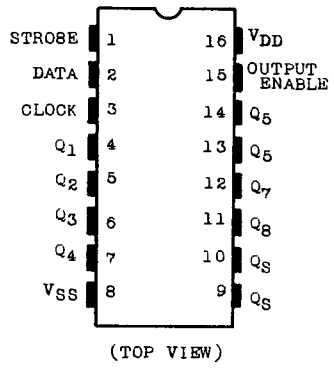


**TRUTH TABLE**

| CL | OE | ST | D | PO | | SC | |
|---|---|---|---|---|---|---|---|
| | | | | $Q_1$ | $Q_n$ | $Q_S$ | $\overline{Q}_S$ |
| ↑ | H | H | L | L | $Q_n-1$ | $Q_7$ | NC |
| ↑ | H | H | H | H | $Q_n-1$ | $Q_7$ | NC |
| ↑ | H | L | * | NC | NC | $Q_7$ | NC |
| ↑ | L | * | * | HZ | HZ | $Q_7$ | NC |
| ↓ | H | * | * | NC | NC | NC | $Q_S$ |
| ↓ | L | * | * | HZ | HZ | NC | $Q_S$ |

CL = Clock
OE = Output Enable
ST = Strobe
D = Data
PO = Parallel Outputs
SO = Serial Output
* = Don't care
NC = No Change
HZ = High Impedance

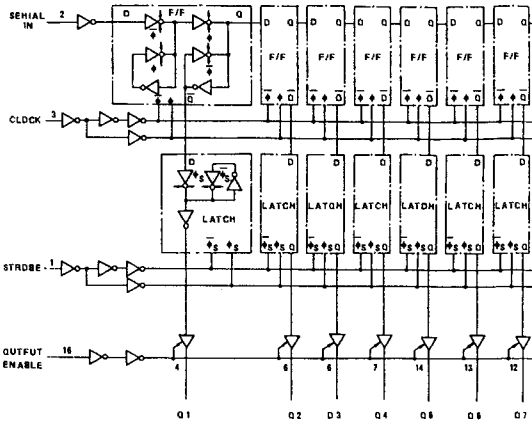


**BLOCK DIAGRAM**

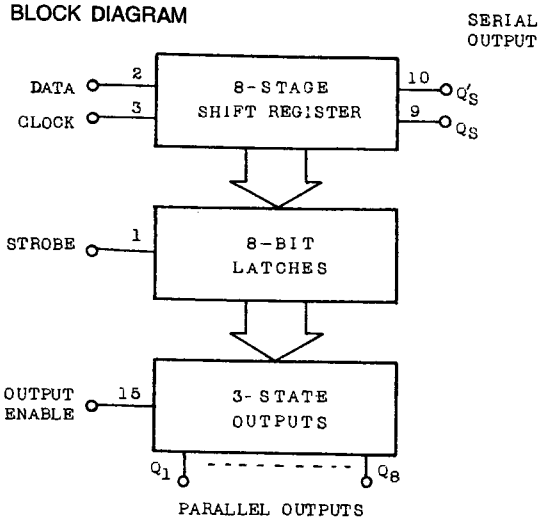


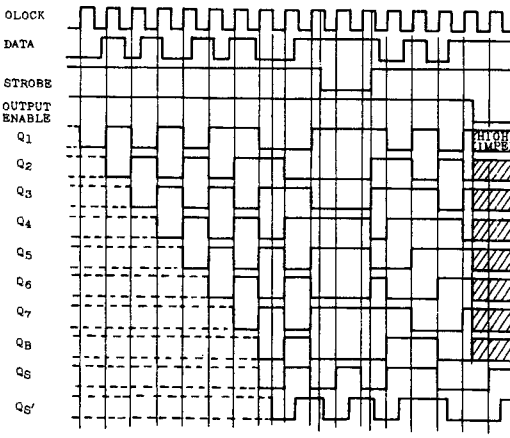


## ■ TC4W53F 【TOSHIBA】
**(2-Channel Multiplexer)**

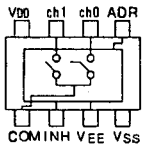


## ■ TC74ACT541F 【TOSHIBA】
**(Octal Bus Buffer (3-State))**

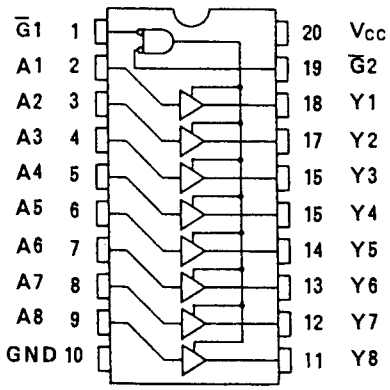


## ■ TC74HC00AF 【TGSHIBA】
**(Quad 2-Input NAND Gates)**

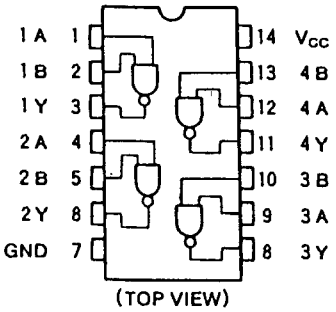


## ■ TC74HC04AF 【TGSHIBA】
**(Refer to SN74LS04NS-TL.)**



VIDE-V20471 / Druck 110

## ■ TC74HC0SAF 【TOSHI6A】
(Quad 2-Input AND Oates)

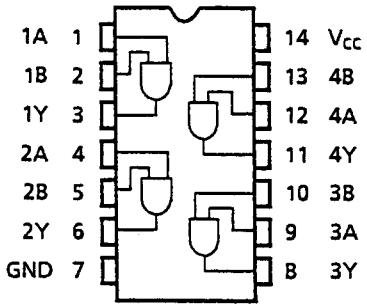


(TOP VIEW)

TRUE Table

| A | B | Y |
|---|---|---|
| L | L | L |
| L | H | L |
| H | L | L |
| H | H | H |

## ■ TC74HC107AF 【TOSHI6A】
(Triple 3-Input NAND Oates)

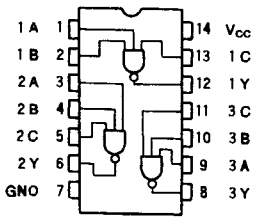


(TOP VIEW)

TRUE Table

| A | B | C | Y |
|---|---|---|---|
| L | X | X | H |
| X | L | X | H |
| X | X | L | H |
| H | H | H | L |

X : Don't Care

## ■ TC74HC11AF 【TOSH
(Triple 3-Input AND

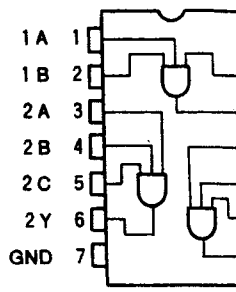


(TOP VIEW)

TRUE Table

| A | B | C |
|---|---|---|
| L | X | X |
| X | L | X |
| X | X | L |
| H | H | H |

X : Don't Cere

## ■ TC74HC13SAF 【TOSHI6A】
(3-Line to S-Line Decoders/Demultiplexers)

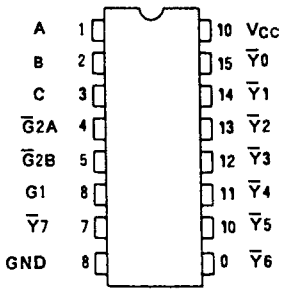


(TOP VIEW)

TRUE Table

| INPUTS | | | | | | OUTPUTS | | | | | | | | SELECTED OUTPUT |
|---|---|---|---|---|---|---|---|---|---|---|---|---|---|---|
| ENABLE | | | SELECT | | | | | | | | | | | |
| G1 | G2A | G2B | C | B | A | Y6 | Y1 | Y2 | Y3 | Y4 | Y6 | Y6 | Y7 | |
| L | X | X | X | X | X | H | H | H | H | H | H | H | H | NONE |
| X | H | X | X | X | X | H | H | H | H | H | H | H | H | NONE |
| X | X | H | X | X | X | H | H | H | H | H | H | H | H | NONE |
| H | L | L | L | L | L | L | H | H | H | H | H | H | H | Y6 |
| H | L | L | L | L | H | H | L | H | H | H | H | H | N | Y1 |
| H | L | L | L | H | L | H | H | L | H | H | H | H | H | Y2 |
| H | L | L | L | H | H | H | H | H | L | H | H | H | H | Y3 |
| H | L | L | H | L | L | H | H | H | H | L | H | H | H | Y4 |
| H | L | L | H | L | H | H | H | H | H | H | L | H | H | Y6 |
| H | L | L | H | H | L | H | H | H | H | H | H | L | H | Y6 |
| H | L | L | H | H | H | H | H | H | H | H | H | H | L | Y7 |

X : DONT' CARE

## ■ TC74HC161AF 【TOSHIBA】
(Synchronous 4-Sit Counters Binary,Direct Clear)

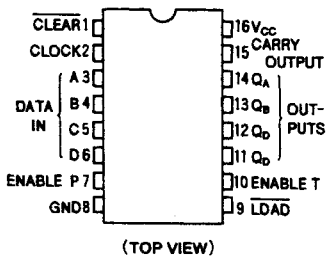


(TOP VIEW)

• THRU TABLE

| 74HC160A/161A INPUTS | | | | | OUTPUTS | | | | FUNCTION |
|---|---|---|---|---|---|---|---|---|---|
| CLR | LD | ENP | ENT | CK | QA | QB | QC | QD | |
| L | X | X | X | X | L | L | L | L | Resot to "0" |
| H | L | X | X | ↑ | A | B | C | D | Presot Data |
| H | H | X | L | ↑ | No change | | | | Do not count |
| H | H | L | X | ↑ | No change | | | | Do not count |
| H | H | H | H | ↑ | Count up | | | | Count |
| H | X | X | X | ↓ | No change | | | | Do not count |

Note X : Don't care
A,B,C,D : Logic level of input data
Carry : CARRY=ENT·QA·QB·QC·QD·····(TC74HC161A)

## ■ TC74HC30AF 【TOSHIBA】
**(S-Input NAND Gates)**

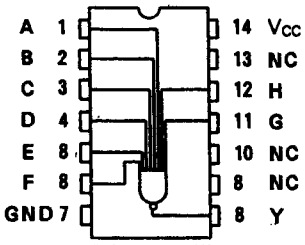


(TOP VIEW)

NC:Nc Connection

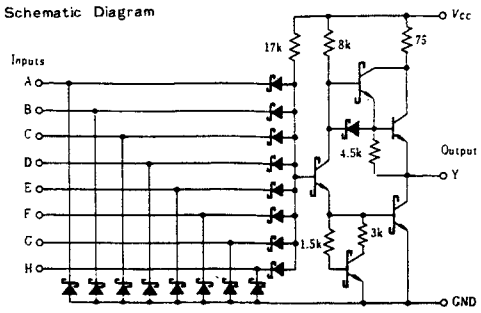


TRUE Table

| INPUTS | | | | | | | | OUTPUTS |
|---|---|---|---|---|---|---|---|---|
| A | B | C | D | E | F | G | H | |
| H | H | H | H | H | H | H | H | L |
| L | X | X | X | X | X | X | X | H |
| X | L | X | X | X | X | X | X | H |
| X | X | L | X | X | X | X | X | H |
| X | X | X | L | X | X | X | X | H |
| X | X | X | X | L | X | X | X | H |
| X | X | X | X | X | L | X | X | H |
| X | X | X | X | X | X | L | X | H |

## ■ TC74HC373AF 【TOSHIBA】
**(Octal D-Type Latch With NON-Inverted 3-State Output)**

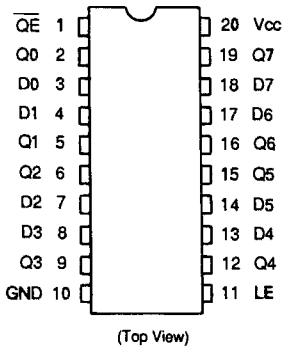


(Top View)

TRUE Table

| INPUTS | | | OUTPUTS |
|---|---|---|---|
| $\overline{OE}$ | LE | D | |
| H | X | X | Z |
| L | L | X | $Q_n$ |
| L | H | L | L |
| L | H | H | H |

X : Don't Care
Z : Hi impedance
Qn : Q output level before the LE become "L".

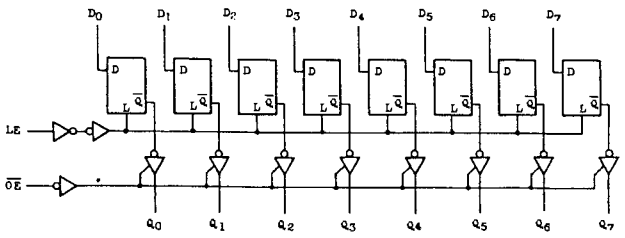


## ■ TC74HC4040AF 【TOSHIBA】
**(Synchronous 12-Bit Binary Ripple Counters)**

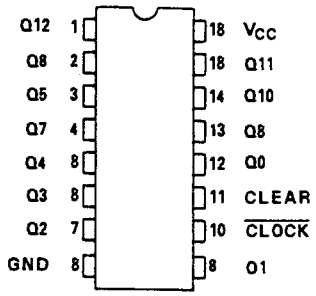


(TOP VIEW)

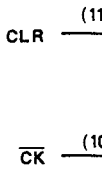


TRUTH TABLE

| CLOCK | CLEAR | OUTPUT S |
|---|---|---|
| X | H | ALL OUTPUTS |
| ↓ | L | NO CHANGE |
| ↑ | L | ADVANCE TO |

X ; Don't care

Timing chart

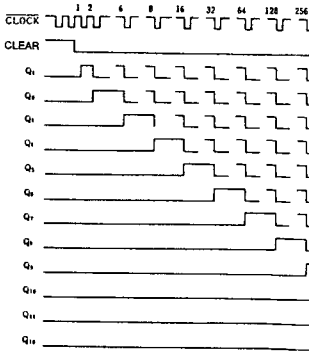


## ■ TC74HC4066AF 【TOSHIBA】
**(Quad Analog Switchas)**

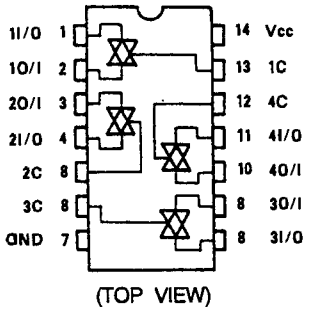


(TOP VIEW)

## ■ TC74HC453BAF 【TOSHIBA】
**(Dual Retriggerable Monostahle Multivibrator)**

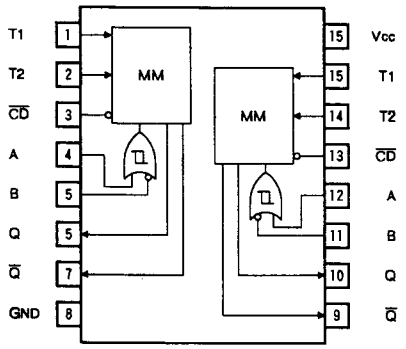


TQP VIEW

TRUE Table

| INPUT | | | OUTPUT | | NOTE |
|---|---|---|---|---|---|
| A | B | CD | Q | Q | |
| ↓ | H | H | ⊓ | ⊔ | OUTPUT ENABLE |
| X | L | H | L | H | INHIBIT |
| H | X | H | L | H | INHIBIT |
| L | ↓ | H | ⊓ | ⊔ | OUTPUT ENABLE |
| X | X | L | L | H | INHIBIT |

X:Don't Care

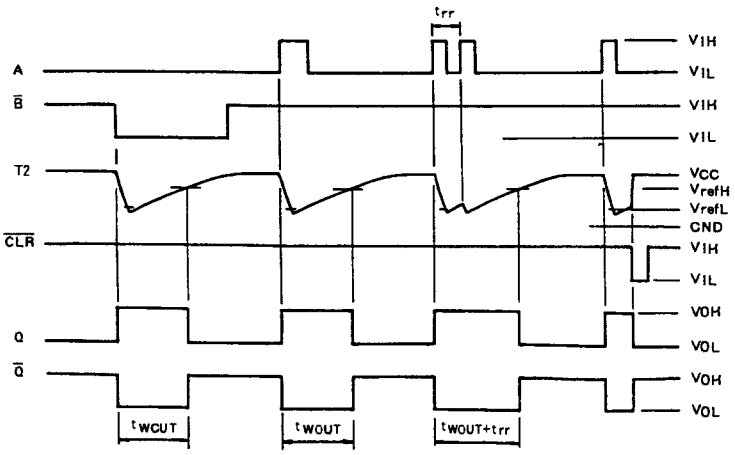


## ■ TC74HC74AF 【TOSHIBA】
**(Refer to MC74HC74AF.)**

## ■ TC74HCB5AF 【TOSHIBA】
**(Quad 2-Input Exclusive-OR Gates)**

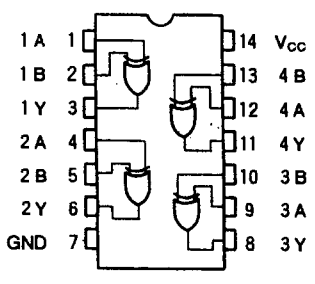


(TOP VIEW)

TRUE Table

| A | B | Y |
|---|---|---|
| H | H | L |
| L | H | H |
| H | L | H |
| L | L | L |

## ■ TC74HCT245AF 【TOSHIBA】
**(Octal Bus Transceivers With NON-Inver 3-State Outputs)**

(TOP VIEW)

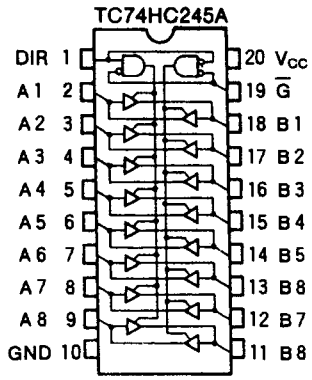


(TOP VIEW)

TRUE Table

| INPUT | | FANCTION | | OUTPUT |
|---|---|---|---|---|
| G | DIR | A BUS | B BUS | HC245A |
| L | L | OUTPUT | INPUT | A=B |
| L | H | INPUT | OUTPUT | B=A |
| H | X | HIIMPEDANCE | | Z |

X : Don't care
Z : Hi impedance

## ■ TC74HCT541AF 【TOSHIBA】
**(Octal Bus Buffer With Inverted 3-Stet Outputs)**

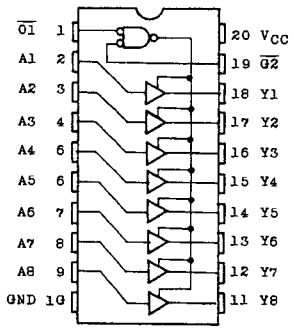


(TOP VIEW)

TRUE Table

| INPUT | | | OUTPU |
|---|---|---|---|
| G1 | G2 | A | Y |
| L | L | H | H |
| L | L | L | L |
| H | X | X | Z |
| X | H | X | Z |

## ■ TC74VHC153F 【TOSHIBA】
(Dual 4-Channel Multiplexer)

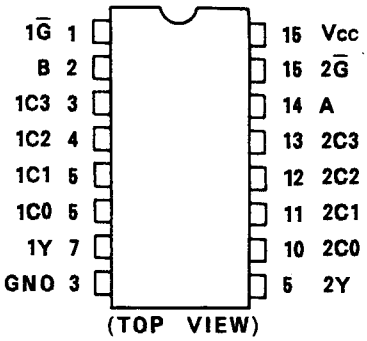


### TRUTH TABLE

| SELECT INPUTS | | DATA INPUTS | | | | STROBE | OUTPUT Y | |
|---|---|---|---|---|---|---|---|---|
| B | A | C0 | C1 | C2 | C3 | G̅ | HC153A | HC253A |
| X | X | X | X | X | X | H | L | Z |
| L | L | L | X | X | X | L | L | L |
| L | L | H | X | X | X | L | H | H |
| L | H | X | L | X | X | L | L | L |
| L | H | X | H | X | X | L | H | H |
| H | L | X | X | L | X | L | L | L |
| H | L | X | X | H | X | L | H | H |
| H | H | X | X | X | L | L | L | L |
| H | H | X | X | X | H | L | H | H |

X : Don't Care
Z : High Impedance

BLOCK DIAGRAM

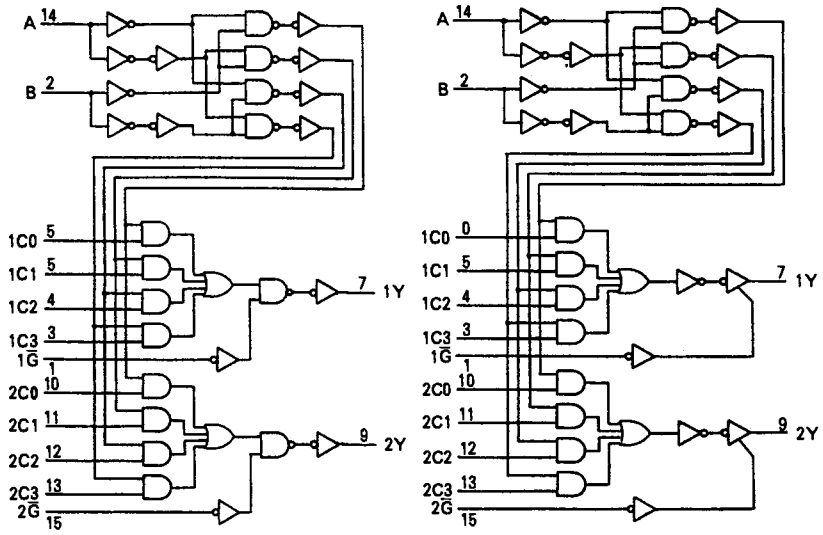


## ■ TC74VHC164F 【TOSHIBA】
(S-Bit Serial Input/Parallel Output Shift Registers,Synchronous Clear)

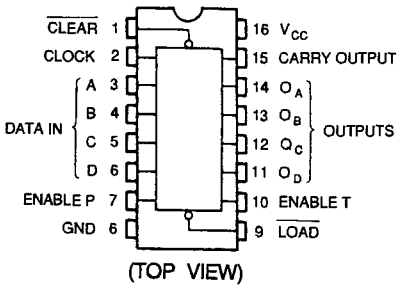


SN74
IN

| CLR | LD | |
|---|---|---|
| L | * | |
| H | L | |
| H | H | |
| H | H | |
| H | H | |
| * | * | |

Note *
A.
Car

### Timing chart

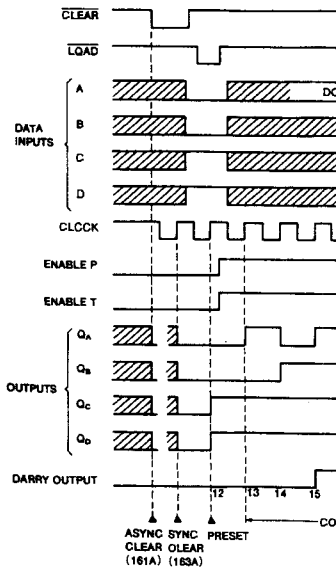


## ■ TC74VHC245F 【TOSHIBA】
(Refer to TC74HCT245AF.)

## ■ TC74VHC541F 【TOSHIBA】
(Refer to TC74HCT541AF.)

## ■ TC74VHC74F 【TOSHIBA】
(Refer to MC74HC74AF.)

## ■ TC7S04F 【TOSHIBA】
**(Invertor)**

Pin arangement

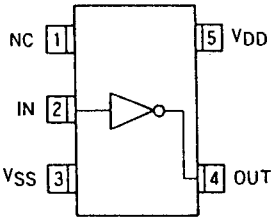


## ■ TC7S0SF 【TOSHIBA】
**(2 Input Single AND Gate)**

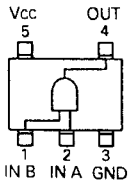


TRUE Table

| A | B | X |
|---|---|---|
| L | L | L |
| L | H | L |
| H | L | L |
| H | H | H |

## ■ TC7SH0BF 【TOSHIBA】
**(Refer to TC7S06F.)**

## ■ TC7SU04F 【TOSHIBA】
**(Refer to TC7S04F.)**

## ■ TC7W00F 【TOSHIBA】
**(2 Input Dual NAND Gate)**

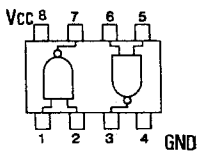


TRUE Table

| A | B | X |
|---|---|---|
| L | L | H |
| L | H | H |
| H | L | H |
| H | H | L |

## ■ TC7W02F 【TOSHI6A】
**(2 Input Dual NOR Gate)**

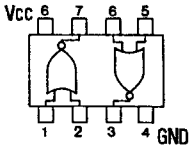


## ■ TC7W04F 【TOSHIBA】
**(Triple Inverter Gate)**

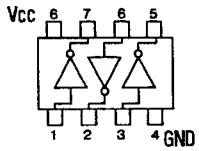


## ■ TC7W0SF 【TOSHI6A】
**(2 Input Dual AND Gate)**

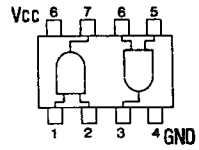


## ■ TC7W32F 【TOSHIBA】
**(2 Input Dual OR Gate)**

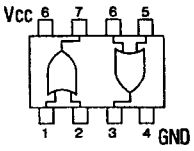


TRUE Table

| A | B | X |
|---|---|---|
| L | L | L |
| L | H | H |
| H | L | H |
| H | H | H |

## ■ TC7WU04F 【TOSHIBA】
**(Triple Unbuffered Inverter Gate)**

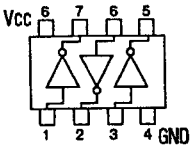


## ■ TD74BC244F 【TOSHIBA】
**(Refer to TC74VHC244F.)**

## ■ TC7W126FU 【TOSHIBA
**(Dual Bus Buffer)**

(TOP VI

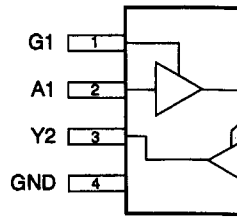


Truth Teble

| INPUTS | |
|---|---|
| G | A |
| L | X |
| H | L |
| H | H |

## ■ TC7WH74FU 【TOSHIBA
**(O-Q Flip-Flep with Pres**

(TOP VIE

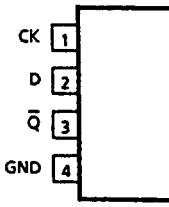


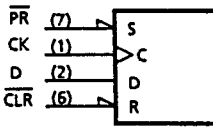


TRUE Table

| INPUTS | | | |
|---|---|---|---|
| CLR | PR | D | CK |
| L | H | × | × |
| H | L | × | × |
| L | L | × | × |
| H | H | L | ↑ |
| H | H | H | ↑ |
| H | H | × | ↓ |

× : Don't care

## ■ TL431CPS 【TEXAS】
**(Regulator)**

Top View

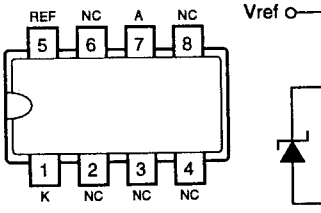

## ■ TMPB2C255AN-2 【TOSHIBA】
**(CMOS Prcgrammable Peripheral Interface)**

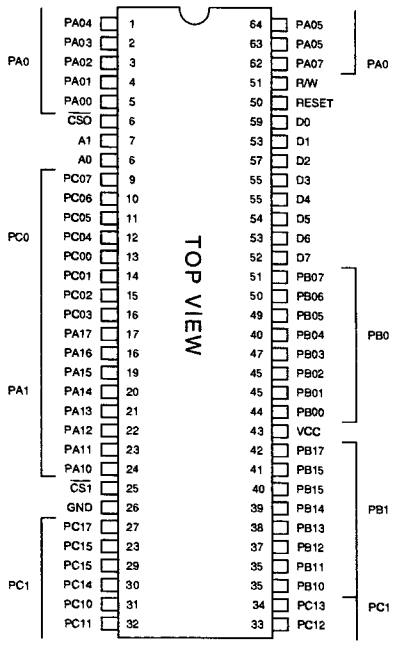


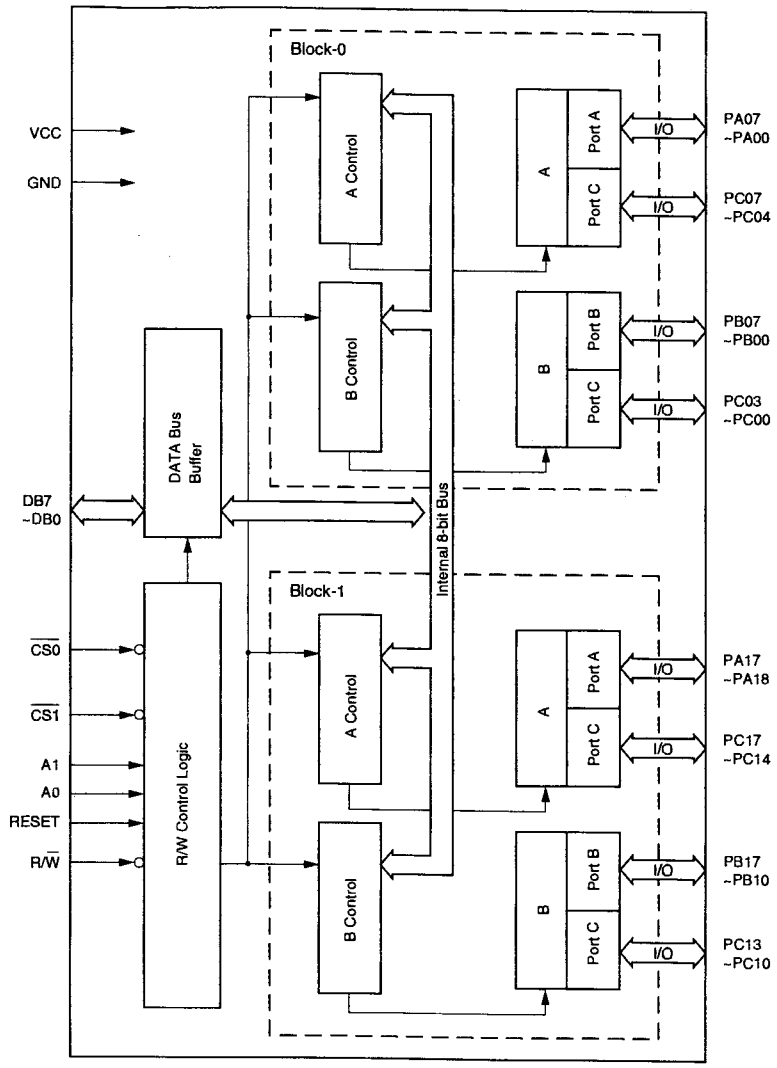


## ■ TMPZS4C30AM-6 【TOSHIBA】
**(CMOS Counter Timer Circuit)**

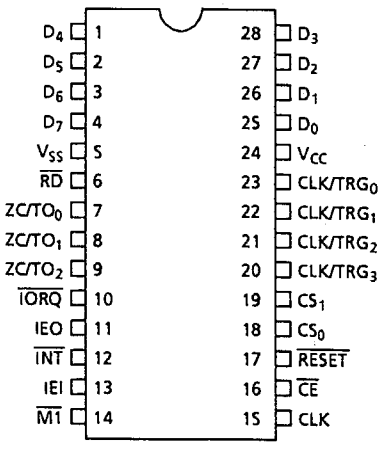


(TOP VIEW)

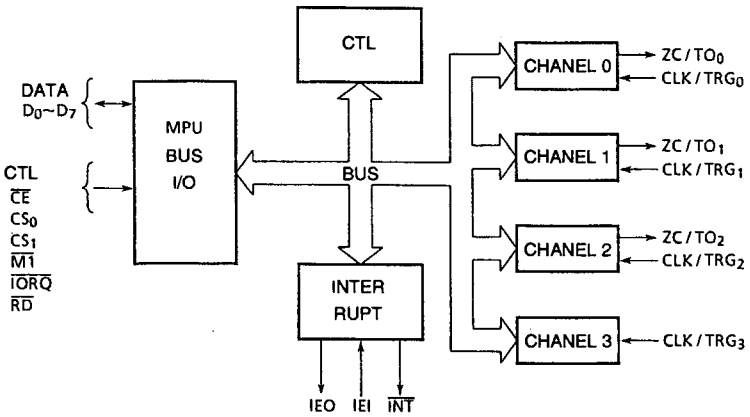

## ■ UPC2384GA 【NEC】
(Digital VTR PLL)

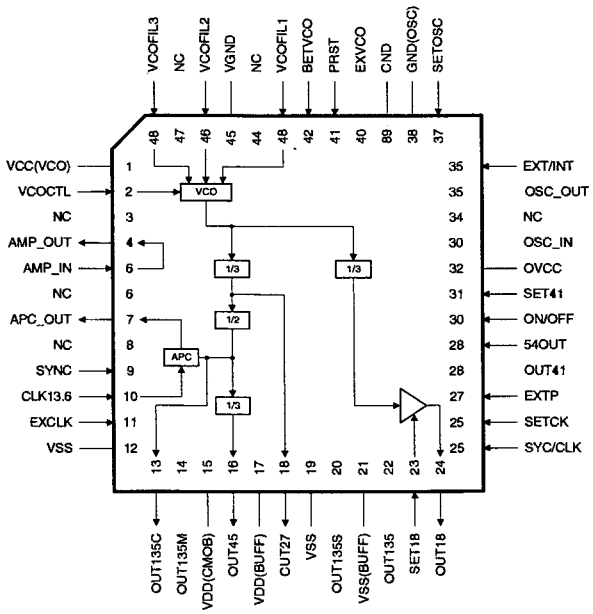


| Pin No. | Label | In/Out | Description |
|---|---|---|---|
| 1 | VCC (VCO) | - | Power supply (+3 V) |
| 2 | VCOCTL | In | VCO frequency control |
| 3 | NC | - | Not used |
| 4 | AMP_OUT | Out | AMP. output fer APC filter |
| 5 | AMP_IN | In | AMP. input for APC filter |
| 6 | NC | - | Not used |
| 7 | APC_OUT | Out | Phase comparator output |
| 8 | NC | - | Nnt used |
| 9 | SYNC | - | - |
| 10 | CLK13.5 | In | Reference clock input (13.5 MHz) from SSG (IC807) |
| 11 | EXCLK | - | - |
| 12 | VSS | - | Ground |
| 13 | OUT135C | Out | Clock output (13.5 MHz) |
| 14 | OUT135M | - | Not used |
| 15 | VDD (CMOS) | - | Power supply (+3 V) |
| 18 | OUT45 | Out | Clock output (4.5 MHz) |
| 17 | VDD (BUFF) | - | Power supply (+3 V) |
| 19 | OUT27 | Out | Clock output (27 MHz) |
| 19 | VSS | - | Ground |
| 28 | OUT135S | - | Not used |
| 21 | VSS (BUFF) | - | Ground |
| 23 | OUT135 | - | Not used |
| 23 | SET18 | In | Output buffer drive control (H: Fixed) |
| 24 | OUT18 | Out | Clock output (18 MHz) |
| 35 | SYC/CLK | In | Input cignal select (L: clock) |
| 28 | SETCK | In | Clock control (L: Internal clock) |
| 27 | EXTP | In | APC select (L: Internal APC) |
| 28 | OUT41 | - | Not used |
| 29 | 54OUT | In | Low fixed |
| 36 | ON/OFF | In | 13.5 MHz clock eutput control (Pin 13) (L: on) |
| 31 | SET41 | In | 54 MHz mode er 41 MHz mode select (L: 54 mode) |
| 32 | OVCC | - | Power supply (+3 V) |
| 35 | OSC_IN | - | Not used |
| 34 | NC | - | Not used |
| 35 | OSC_GUT | - | Not used |
| 36 | EXT/INT | In | OSC select (L: VCO) |
| 37 | SETOSC | In | Set OSC (L: VCO) |
| 35 | GND(OSC) | - | Ground |
| 35 | GHD | - | Grouad |
| 40 | EXVCO | - | Not used |
| 41 | FRST | In | Power on reset pulse width adjust port |
| 42 | SETVCO | In | VCO select (L: tnternal VCO) |
| 48 | VCOFIL1 | In | VCO filter tnminal (54 MHz) |
| 44 | NC | - | Not used |
| 45 | VGND | - | Ground |
| 48 | VCOFIL2 | In | VCO filter terminal (54 MHz) |
| 47 | NC | - | Not used |
| 48 | VCOFIL3 | In | VCO filter terminal (54 MHz) |

## ■ UPC358G2 【NEC】
(Dual Op.Amp.)

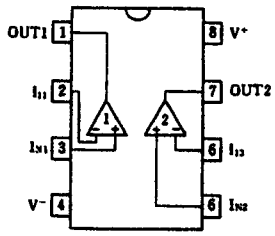


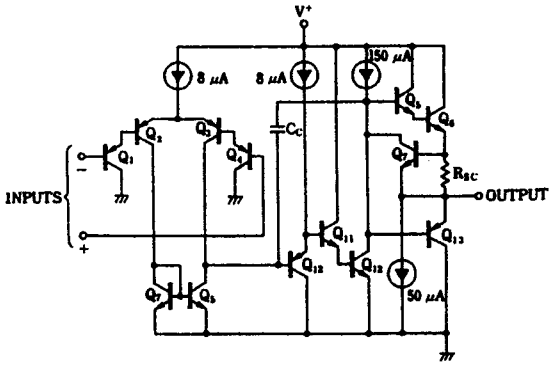


## ■ UPC393G2 【NEC】
(Refer to UPC393C.)

## ■ UPC4082G2 【NEC】
(J-FET Input Dual Op-Amplifire)

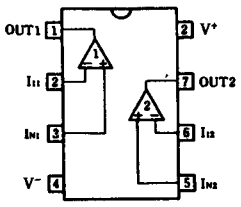


(TOP VIEW)

## ■ UPC78L0
(Regulator

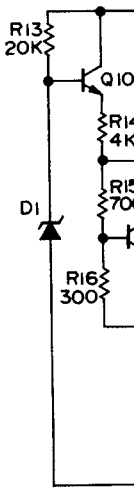

## ■ UPD4284280ALG5 【NEC】
## (3.3V 4M Bit Dynamic RAM)

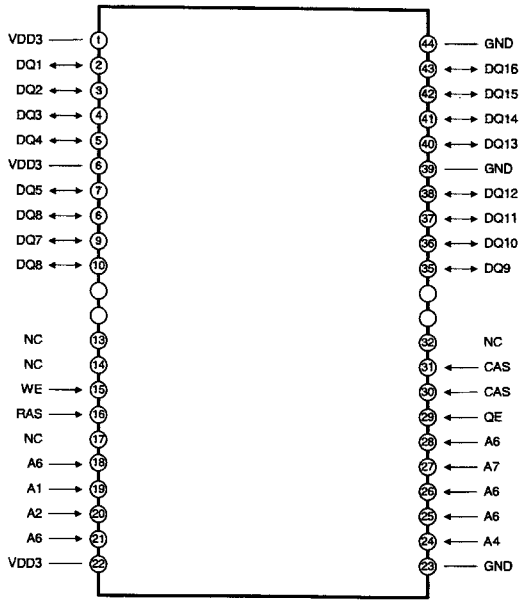


| Pin No. | Label | In/Out | Description |
|---|---|---|---|
| 1 | VDD3 | - | Power supply (+3 V) |
| 2 | DQ1 | In/Out | |
| 3 | DQ9 | In/Out | Memory data (16 bit) |
| 4 | DQ8 | In/Out | |
| 5 | DQ4 | In/Out | |
| 6 | VDD3 | - | Power supply (+3 V) |
| 7 | DQ5 | In/Out | |
| 8 | DQ8 | In/Out | Memory data (16 bit) |
| 9 | DQ7 | In/Out | |
| 10 | DQ8 | In/Out | |
| 11 | | - | |
| 12 | | - | |
| 13 | NC | - | Not used |
| 14 | NC | - | Not used |
| 15 | WE | In | Memory write enable |
| 16 | RAS | In | Memory row address strobe |
| 17 | NC | - | Not used |
| 18 | A0 | In | (A8. LSB) |
| 19 | A1 | In | Memory address (9 bit) |
| 20 | A2 | In | |
| 21 | A8 | In | |
| 22 | VDD3 | - | Power supply (+3 V) |
| 23 | GND | - | Groued |
| 24 | A4 | In | |
| 25 | A5 | In | |
| 26 | A6 | In | Memory eddress (9 bit) |
| 27 | A7 | In | |
| 28 | A8 | In | (A8: MSB) |
| 39 | GE | In | Meroory output enable |
| 39 | CAS | In | Memory column address strobe |
| 31 | CAS | In | Memory column address strobe |
| 32 | NC | - | Not used |
| 33 | | - | |
| 34 | | - | |
| 36 | DQ9 | In/Out | |
| 36 | DQ10 | In/Out | Memory data (16 bit) |
| 37 | DQ11 | In/Out | |
| 39 | DQ12 | In/Out | |
| 39 | GND | - | Groued |
| 40 | DQ13 | In/Out | |
| 41 | DQ14 | In/Out | Memory data (16 bit) |
| 42 | DQ15 | In/Out | |
| 43 | DQ16 | In/Out | |
| 44 | GND | - | Ground |

## ■ UPD485505G-35 【NEC】
## (5K-Word x 8-bit FIFO MEMORY)

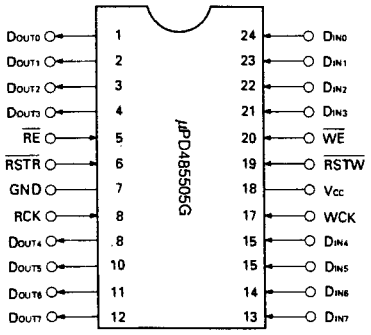


(TOP VIEW)

DIN0~DIN7 : Data input
DOUT0~DOUT7 : Data output
WCK : Write clock input
RCK : Read clock input
WE : Write enable input
RE : Read enable input
RSTW : Reset write input
RSTR : Reset read input

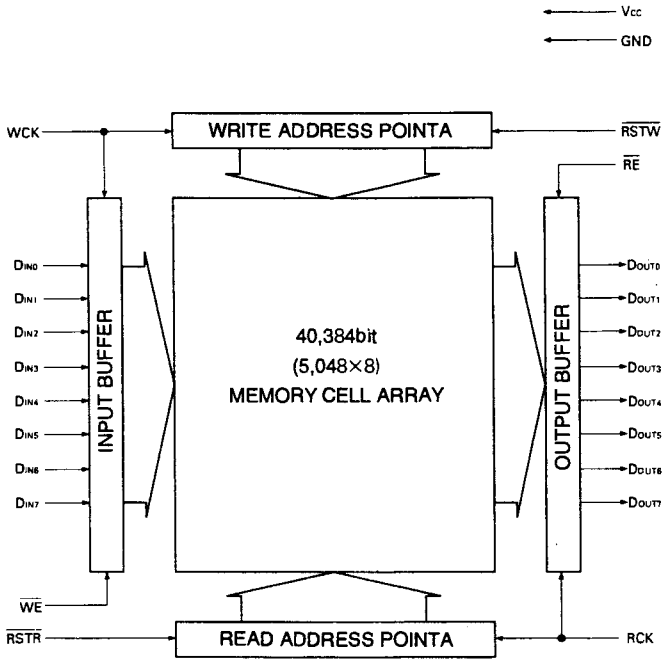


## ■ UPC78N12H 【NEC】
## (Threa Terminal Positive Voltaga Reguletor (+12V))

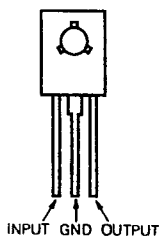


(TOP VIEW)

## ■ UPC79N12H 【NEC】
## (Thraa Tarminal Nagat Voltaga Ragulator (-

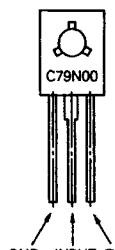


(TOP VIEW)

## ■ UPD6383GF 【NEC】
**(Audio Digital Analog Proceeeor)**

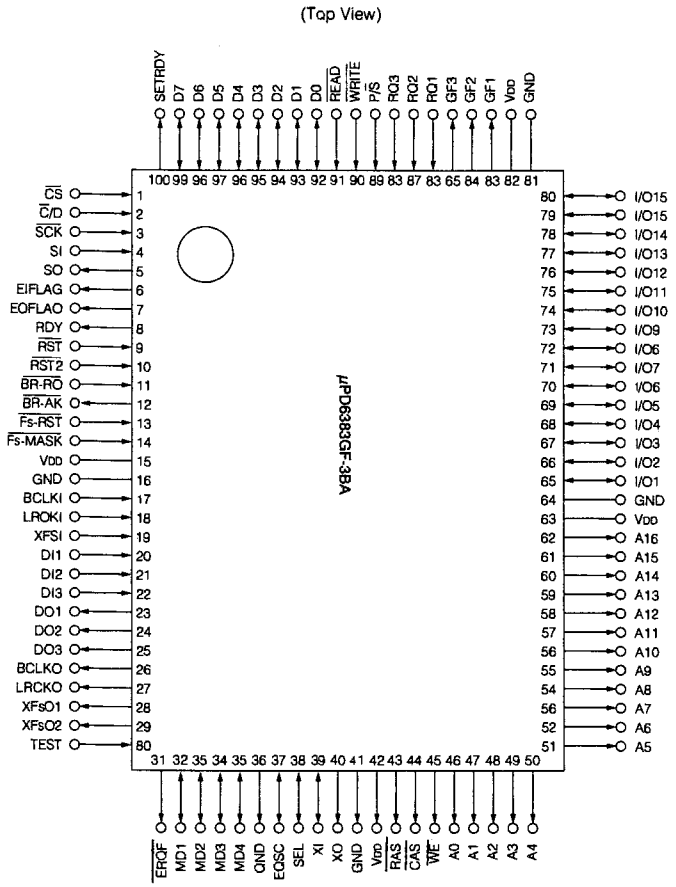


## ■ UPD6454GT-101 【NEC】
**(Caractor Generator)**

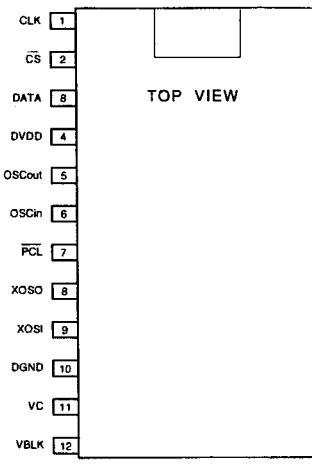


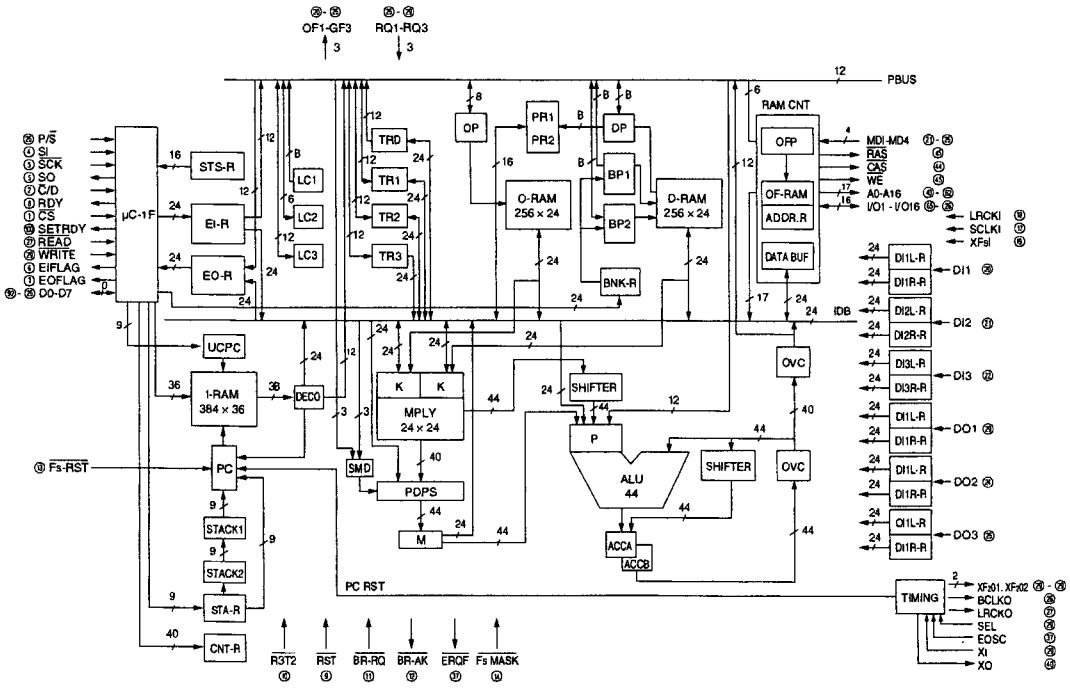

## ■ UPD784021GC 【NEC】
(15 Bit Microcomputer)

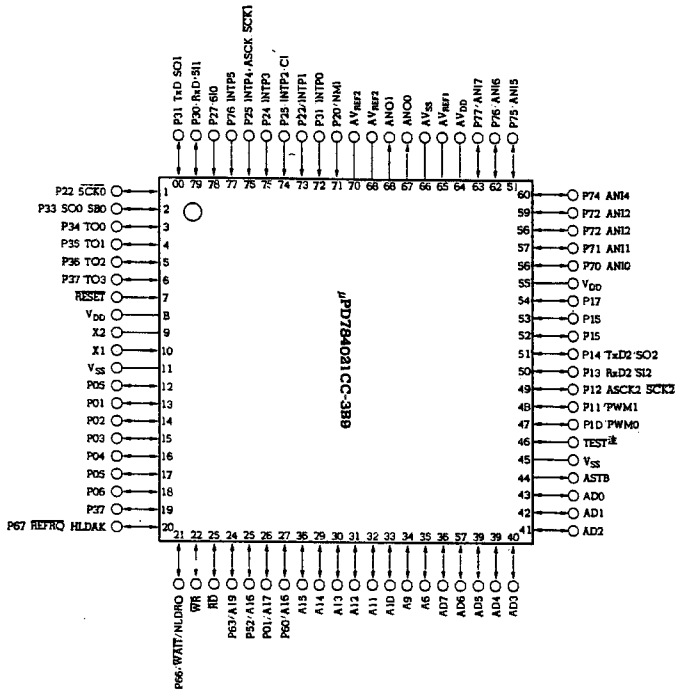


## ■ UPD78P054GC-101 【NEC】
(8 8it Single Chip Microcemputer)

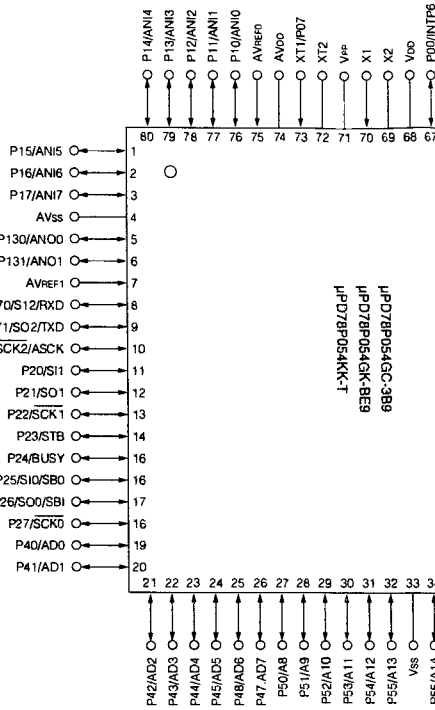


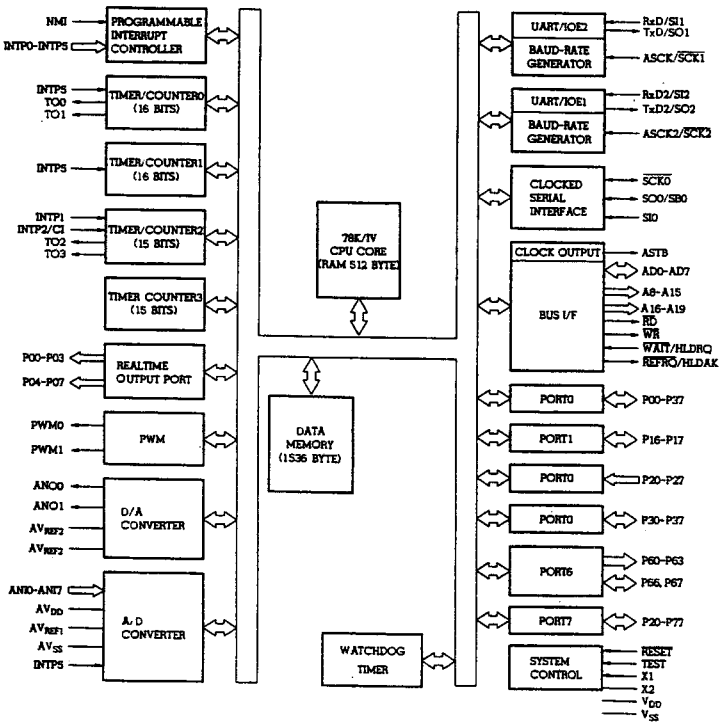


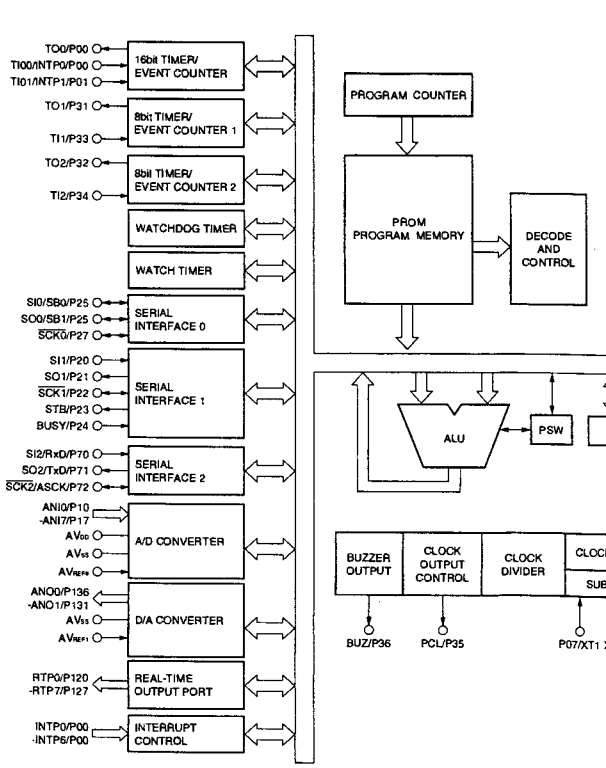


## ■ UPD78054GC-237 【NEC】
(Refer to UPD7SP054GC-101.)

## ■ UPD78P054GC-301 【NEC】
(Refer to UPD78P054GC-101.)

## ■ UPD78P58YGC-001 【NEC】
(Refer to UPD78P054GC-101.)



VIDE-V20471 / Druck 120

## ■ VC2087A 【JVC】
**(Time Ccde Controller)**

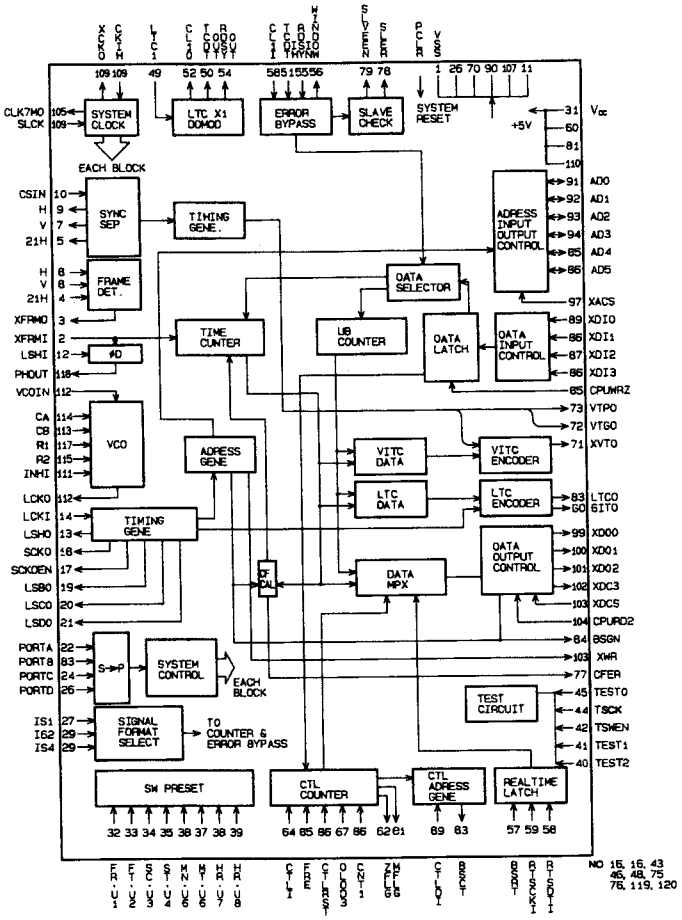


## ■ VC2080 【JVC】
**(Time Code (VITC) Reeder)**

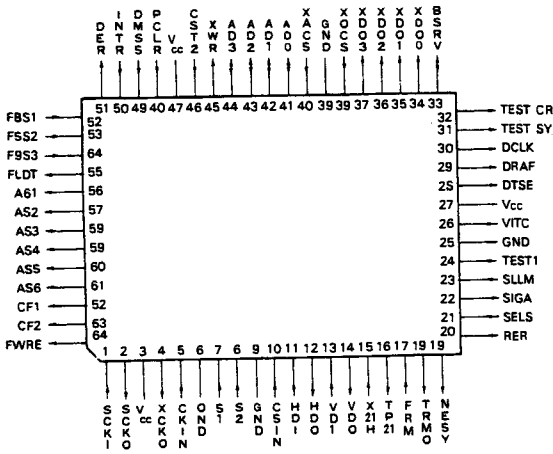


| PIN NO. | IN/OUT | PIN NAME | DESCRIPTION |
|---|---|---|---|
| 1. CLOCK SIGNAL | | | |
| 5 | I | CKIN | SYSTEM CLOCK IN |
| 4 | O | SCKO | CLOCK OUT |
| 2 | O | SCKO | SYSTEM CLOCK OUT |
| 1 | I | SCKI | SYSTEM CLOCK IN |
| 2. VITC SIGNAL | | | |
| 28 | I | VITC | VITC SIGNAL IN |
| 26 | I | SLLM | READ SIZE SELECT IN |
| 30 | O | DCLK | VITC READ CLOCK OUT |
| 29 | O | DRAF | VITC SYNCHRONISE SIGNAL O OUT |
| 26 | O | DTSE | VITC DATA SEARCH FLAG OUT |
| 22 | O | SIGA | SIGNAL VITC AREA OUT |
| 3. SYNC. SIGNAL | | | |
| 16 | I | CSIN | C-SYNC IN |
| 14 | O | VDO | VERTICAL SYNC DRIVE OUT |
| 13 | I | VDI | VERTICAL SYNC DRIVE IN |
| 12 | O | HDO | HORIZONTAL SYNC DRIVE OUT |
| 11 | I | HDI | HORIZONTAL SYNC DRIVE IN |
| 18 | O | DTP21 | OUTPUT TP21 |
| 15 | I | ITP21 | IMPUT TP21 |
| 18 | O | XFRMO | FRAME SIGNAL OUT |
| 17 | I | XFRMI | FRAME SIGNAL IN |
| 19 | O | NESY | LOST-SYNC FLAG OUT |

## ■ 74ACT2418J 【NATIONAL SEMICONDUCTOR】
**(Octel 8uffer/Line Driver with TRI-STATE Outputs)**

Pin Assignment
for DIP, Flaipak and SOIC

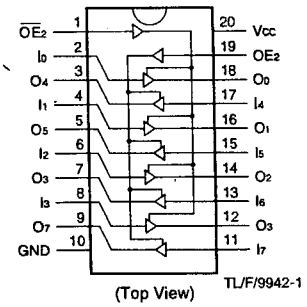


(Top View) TL/F/9942-1

Truth Tables

| Inputs | | Outputs (Plins 12, 14, 16, 18) |
|---|---|---|
| $\overline{OE_1}$ | In | |
| L | L | L |
| L | H | H |
| H | X | Z |

| Inputs | | Outputs (Plins 3, 5, 7, 9) |
|---|---|---|
| $OE_2$ | In | |
| H | L | L |
| H | H | H |
| L | X | Z |

H = HIGH Voltage Level
L = LOW Voltage Level
X = Immaterial
Z = High Impedance

## ■ 74ACT574SJ 【NATIONAL SE
**(Octel D-Type EDGE-Trigger F With NON Inverted 3-Stete O**

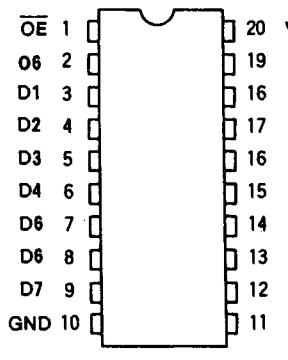


(TOP VIEW)

## ■ GS9000 【GENNUM】
**(Seriel Digitel Decoder)**

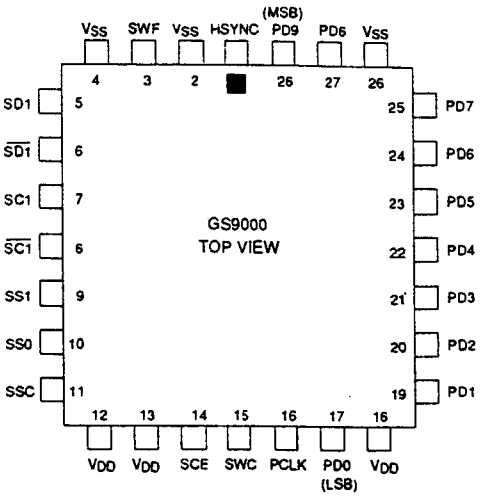


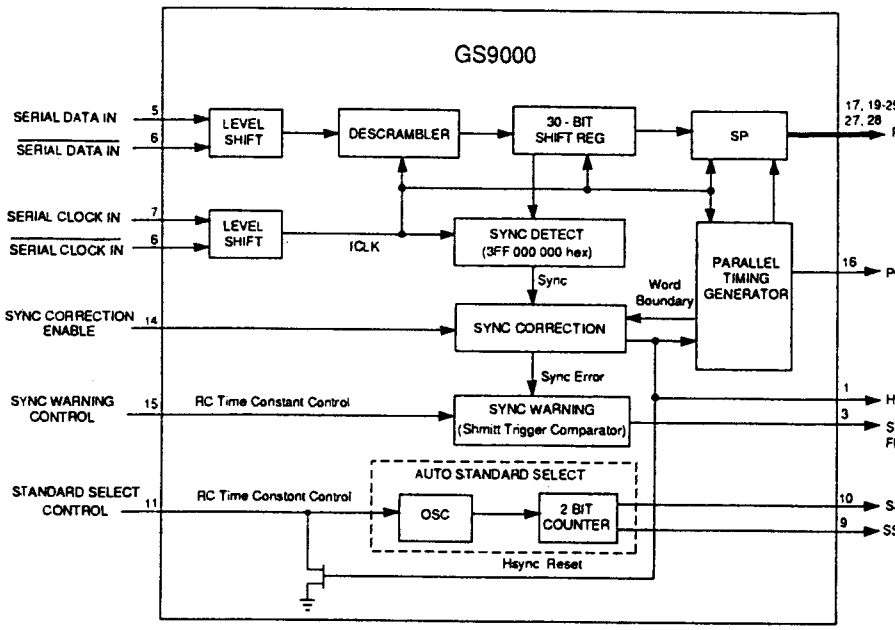


## ■ GS9005A 【GENNUM】
**(Seriel Digitel Receiver)**

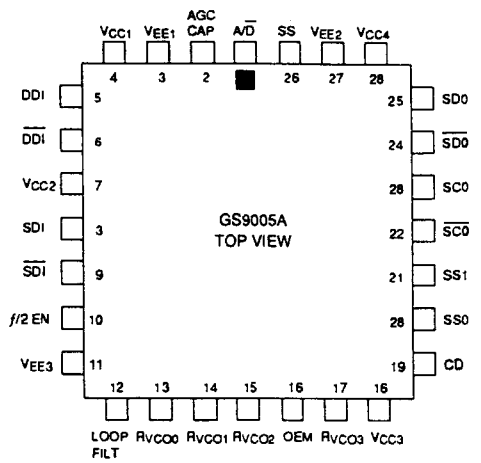


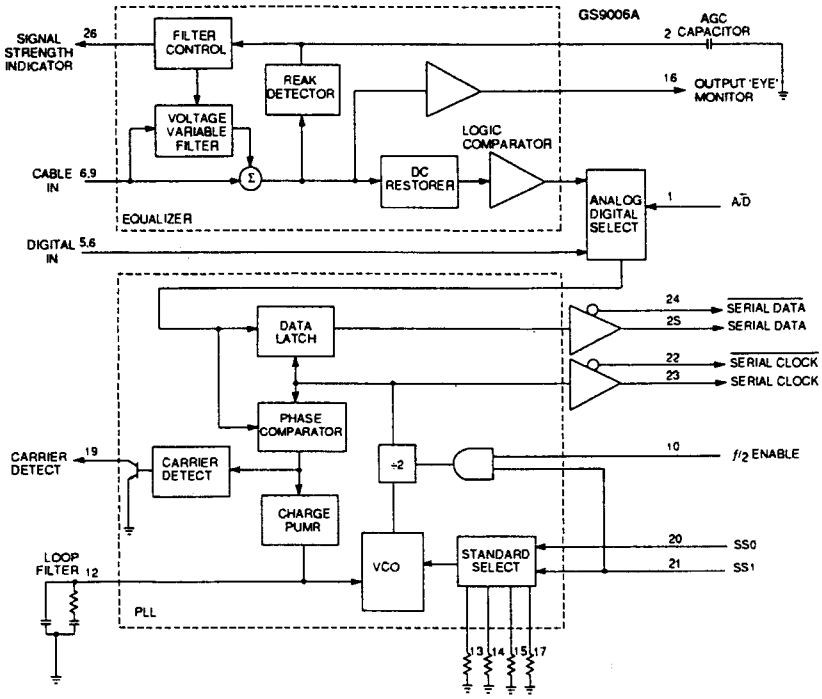

## ■ JCL0031 【JVC】
## (CMOS GATE ARRAY)

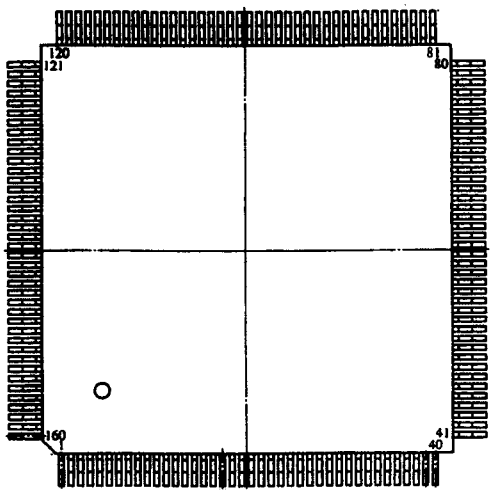


| PIN NO. | Name | I/O | BLOCK TYPE | PIN NO. | Name | I/O | BLOCK TYPE |
|---|---|---|---|---|---|---|---|
| 1 | VBO | - | - | 35 | TINH | I | FIA2 |
| 2 | VDD | - | - | 36 | N.C | - | - |
| 3 | VDD | - | - | 37 | VDO | - | - |
| 4 | VDD | - | - | 38 | VDD | - | - |
| 5 | GK | I | FIA2 | 39 | VDD | - | - |
| 6 | GND | - | - | 40 | VOD | - | - |
| 7 | GND | - | - | 41 | GND | - | - |
| 8 | GND | - | - | 42 | GND | - | - |
| 9 | ANC0 | I | FIA2 | 43 | GND | - | - |
| 10 | ANC1 | I | FIA2 | 44 | GND | - | - |
| 11 | ANC2 | I | FIA2 | 45 | O9 | O | FTO1 |
| 12 | ANC3 | I | FIA2 | 46 | O8 | O | FTO1 |
| 13 | ANC4 | I | FIA2 | 47 | O7 | O | FTO1 |
| 14 | ANC5 | I | FIA2 | 48 | O6 | O | FTO1 |
| 15 | ANC8 | I | FIA2 | 49 | O5 | O | FTO1 |
| 16 | ANC7 | I | FIA2 | 50 | O4 | O | FTO1 |
| 17 | ANC8 | I | FIA2 | 51 | O3 | O | FTO1 |
| 18 | ANO9 | I | FIA2 | 52 | O2 | O | FTO1 |
| 19 | VDD | - | - | 53 | O1 | O | FTO1 |
| 20 | VOD | - | - | 54 | O0 | O | FTD1 |
| 21 | GND | - | - | 55 | GND | - | - |
| 22 | GND | - | - | 56 | GND | - | - |
| 23 | GND | - | - | 57 | GND | - | - |
| 24 | MODB0 | I | FIA2 | 58 | GND | - | - |
| 25 | MODE1 | I | FIA2 | 59 | VDD | - | - |
| 26 | ANCEN | I | FIA2 | 60 | VDD | - | - |
| 27 | ABUSEN | I | FIA2 | 61 | VDD | - | - |
| ER | N.C | - | - | 62 | VDD | - | - |
| 29 | VTE | I | FIA2 | 63 | TOUT | O | FTO1 |
| 30 | TDF | I | FIA2 | 64 | ANCERR | O | FTO1 |
| 31 | TIR | I | FIA2 | 65 | FENER | O | FTO1 |
| 32 | TEB | I | FIA2 | KB | FLENER | O | FTO1 |
| 33 | RSTB | I | FIA2 | 67 | FSTER | O | FTO1 |
| 34 | MEB | I | FIA2 | 6B | ERROR | O | FTO1 |

| PIN NO. | Name | I/O | BLOCK TYPE | PIN NO. | Name | I/O | BLOCK TYPE |
|---|---|---|---|---|---|---|---|
| 69 | LSTD | O | FTO1 | 115 | C8 | I | FIA2 |
| 70 | LOCKH | D | FTO1 | 116 | C9 | I | FIA2 |
| 71 | N.C | - | - | 117 | VDD | - | - |
| 72 | N.C | - | - | 11B | VDD | - | - |
| 78 | N.C | - | - | 119 | VDD | - | - |
| 74 | N.C | - | - | 120 | VDD | - | - |
| 75 | N.C | - | - | 121 | GND | - | - |
| 76 | N.C | - | - | 122 | DND | - | - |
| 77 | CND | - | - | 123 | GND | - | - |
| 78 | GND | - | - | 124 | GND | - | - |
| 79 | CND | - | - | 125 | B0 | I | FIA2 |
| 80 | GND | - | - | 126 | D1 | I | FIA2 |
| 81 | VDD | - | - | 127 | B2 | I | FIA2 |
| 32 | VDO | - | - | 12B | B3 | I | FIA2 |
| 83 | VOD | - | - | 129 | B4 | I | FIA2 |
| 84 | VDD | - | - | 13D | B5 | I | FIA2 |
| 85 | LSB | I | FIA2 | 131 | B6 | I | FIA2 |
| 86 | DL0 | I | FIA2 | 132 | B7 | I | FIA2 |
| 87 | OL1 | I | FIA2 | 133 | 6B | I | FIA2 |
| 83 | DL2 | I | FIA2 | 134 | B9 | I | FIA2 |
| 89 | OL3 | I | FIA2 | 135 | GND | - | - |
| 90 | OL4 | I | FIA2 | 136 | GND | - | - |
| 91 | FL3TD | I | FIA2 | 137 | GND | - | - |
| 92 | LSTDB | I | FIA2 | 133 | GND | - | - |
| 93 | WV625 | I | FIA2 | 139 | VDD | - | - |
| 94 | N.C | - | - | 14D | VDD | - | - |
| 95 | BYPB | I | FIA2 | 141 | VDD | - | - |
| 96 | DOF | I | FIA2 | 142 | VDD | - | - |
| B7 | BOH | I | FIA2 | 143 | GND | - | - |
| 93 | VDD | - | - | 144 | GND | - | - |
| 90 | VDD | - | - | 145 | GND | - | - |
| 100 | VDD | - | - | 146 | GND | - | - |
| 101 | GND | - | - | 147 | A0 | I | FIA2 |
| 1D2 | GND | - | - | 146 | A1 | I | FIA2 |
| 103 | GND | - | - | 149 | A2 | I | FIA2 |
| 104 | GND | - | - | 150 | A3 | I | FIA2 |
| 105 | GND | - | - | 151 | A4 | I | FIA2 |
| 106 | GND | - | - | 152 | A5 | I | FIA2 |
| 107 | G0 | I | FIA2 | 153 | A6 | I | FIA2 |
| 10B | C1 | I | FIA2 | 154 | A7 | I | FIA2 |
| 109 | C2 | I | FIA2 | 155 | AB | I | FIA2 |
| 110 | C8 | I | FIA2 | 156 | A9 | I | FIA2 |
| 111 | C4 | I | FIA2 | 157 | GND | - | - |
| 112 | C5 | I | FIA2 | 15B | GND | - | - |
| 113 | C8 | I | FIA2 | 159 | GND | - | - |
| 114 | C7 | I | PIA2 | 160 | GND | - | - |

## ■ GS9010A 【GENNUM】
**(Seriel Digitel Autemetic Tuning Sub Syetem)**

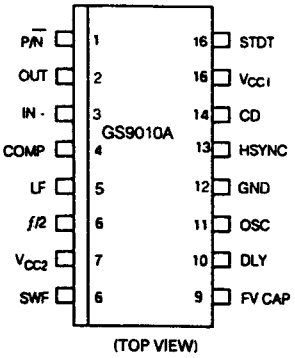

(TOP VIEW)

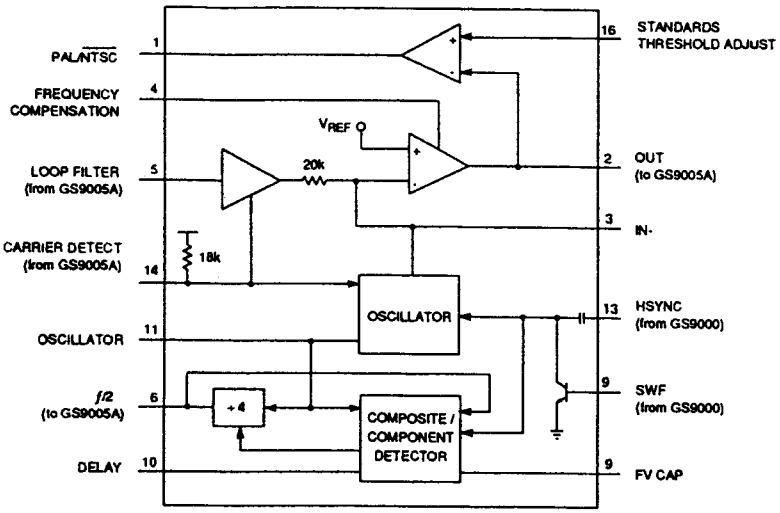


## ■ LM5181IM
**【NATIONAL SEMICONDUCTOR】**
**(100mA, 100MHz Current Feedbeck Amplifier)**

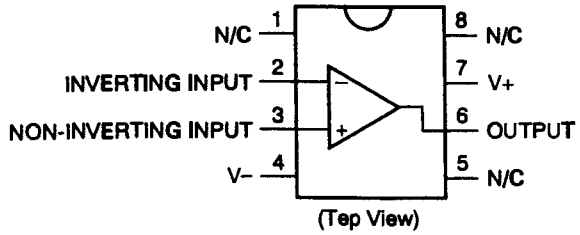

(Tep View)

## ■ MC34050M 【MOTOROLA】
**(Duel EIA-422/423 Trenceiver)**

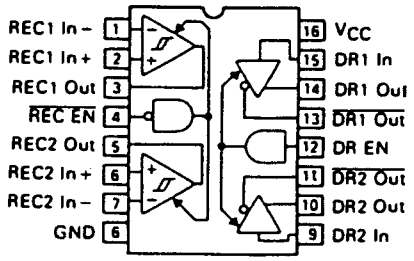

(TOP VIEW)

## ■ P15V8H-15S-001 【AMD】
**(PLD)**

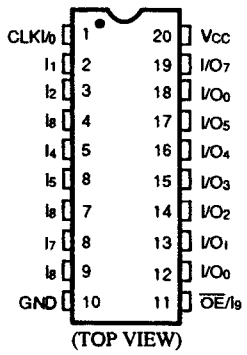

(TOP VIEW)

***Note:** Pin 1 is marked for orientation*

### PIN DESIGNATIONS

| | | |
|---|---|---|
| CLK | = | Clock |
| GND | = | Ground |
| I | = | Input |
| I/O | = | Input/Output |
| $\overline{OE}$ | = | Output Enable |
| Vcc | = | Supply Voltage |

BLOCK DIAGRAM

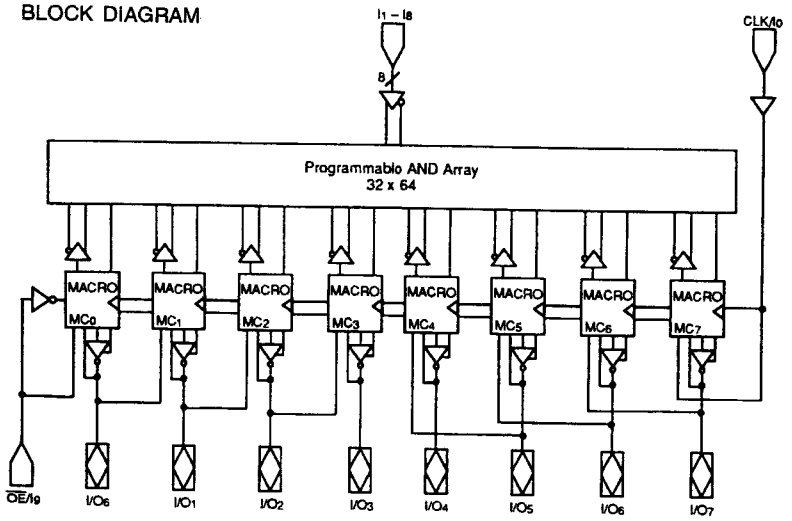

## ■ YM3436D 【YAMAHA】
**(Degitel Audio Interfece)**

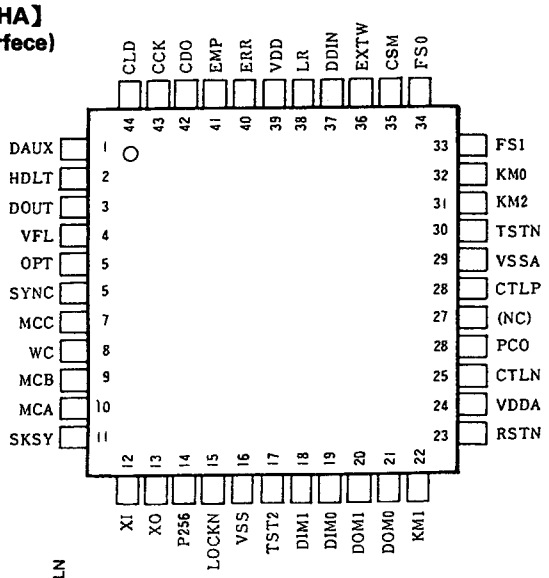


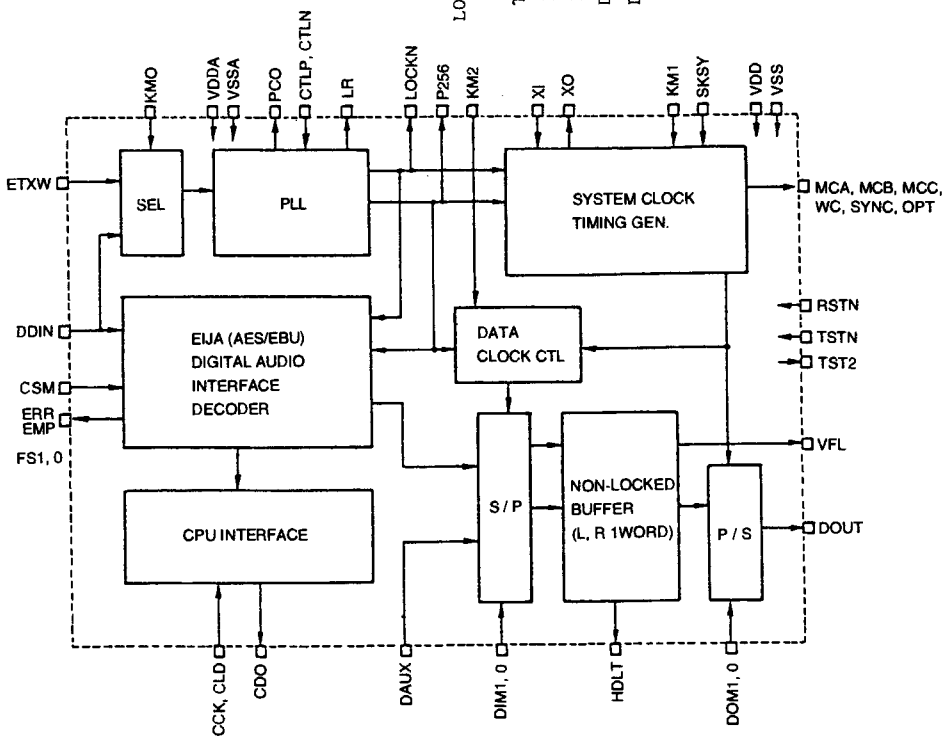


## ■ YM3437C-F 【YAMA
**(Digitel Audio Interfa**

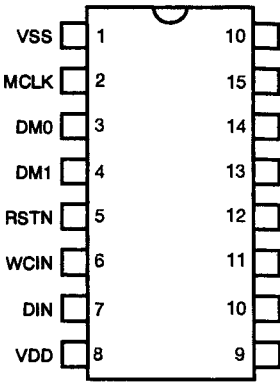

## ■ SWITCHING REGULATOR SCHEMATIC DIAGRAM

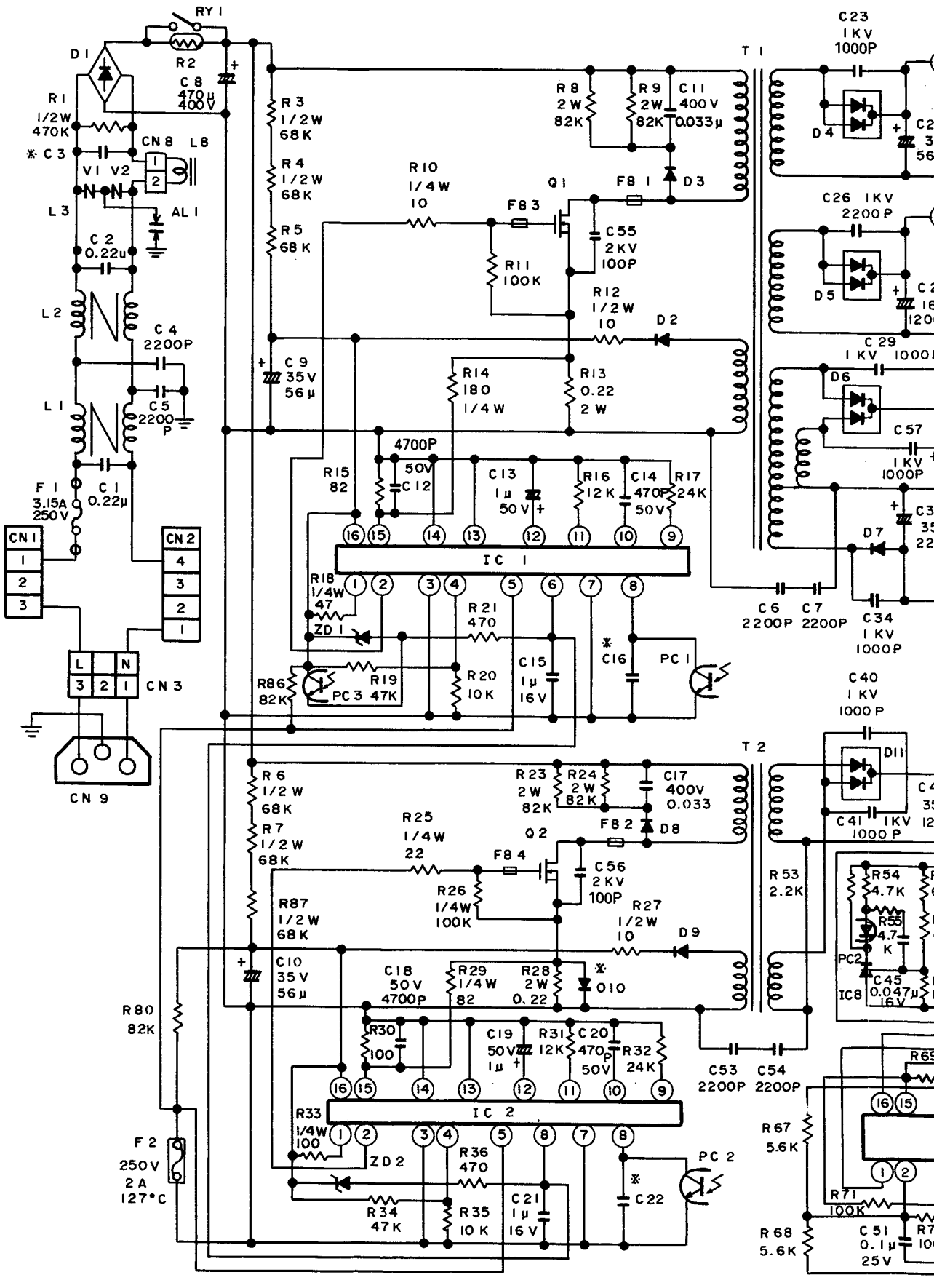

# SECTION 5

# EXPLODED VIEWS AND PARTS LIST

# CONTENTS


5.1 CABINET ASSEMBLY [M2] ..... 5-2
5.2 CHASSIS ASSEMBLY [M3] ..... 5-4
5.3 FRAME ASSEMBLY [M4] ..... 5-7
5.4 REAR FRAME ASSEMBLY [M5] ..... 5-8
5.5 MECHANISM-1 ASSEMBLY [M6] ..... 5-10
5.6 MECHANISM-2 ASSEMBLY [M7] ..... 5-13
5.7 CASSETTE HOUSING ASSEMBLY [M8] ..... 5-14

# SECTION 5
# EXPLODED VIEW AND ASSEMBLY LIST

- **SAFETY PRECAUTION**
  Parts identified by the ⚠ symbol are critical for safety.
  Replace only with specified parts numbers.
- **NOTE**
  Parts not denoted by parts numbers are not supplied by JVC.

## 5.1 CABINET ASSEMBLY M2

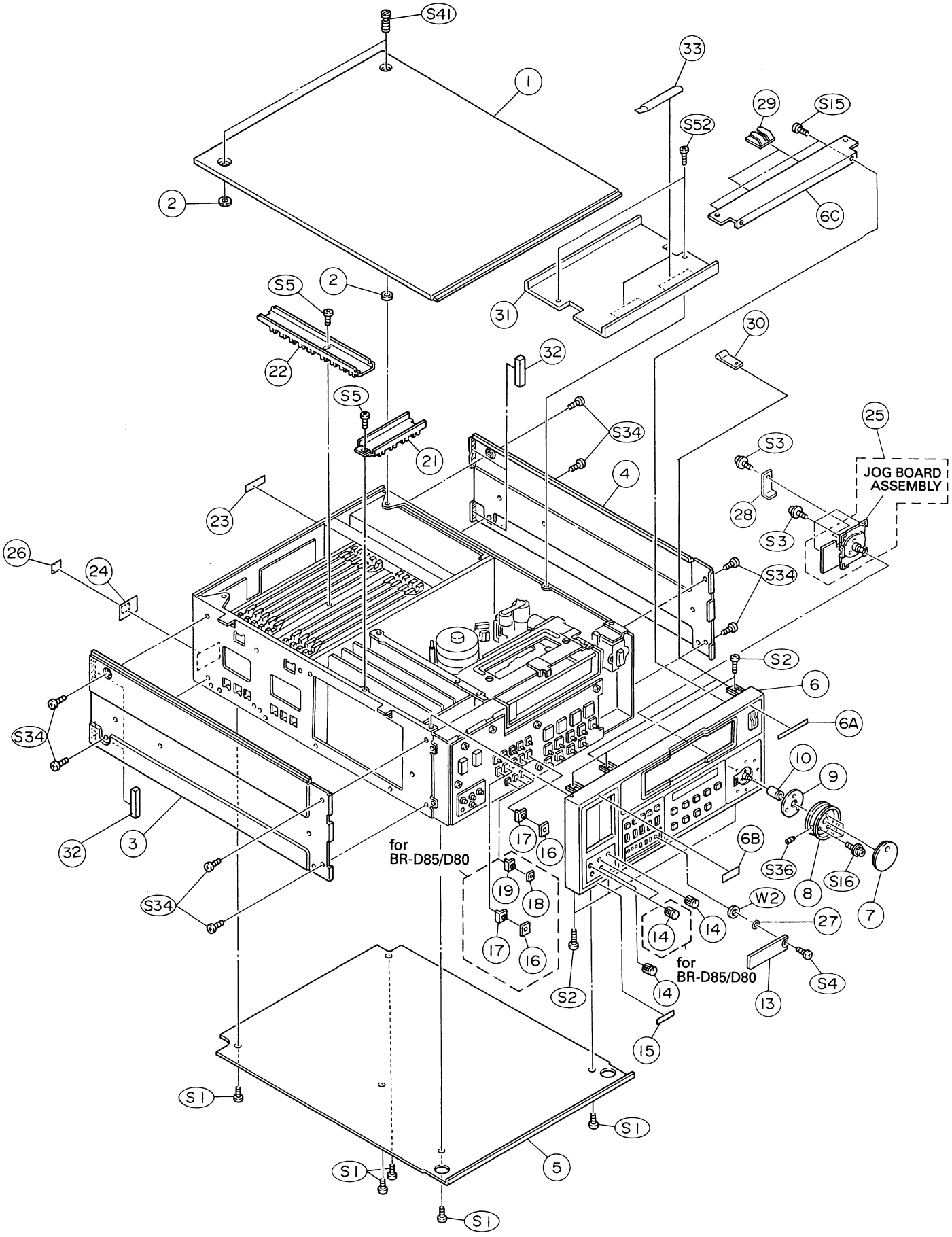

● CABINET ASSEMBLY LIST [M][2]

[M][2][M][M]□□□□

| Symbol No. | Part No. | Part Name | Description |
|---|---|---|---|
| 1 | PRD10231-04 | TOP COVER | |
| 2 | PGD40255 | SPACER | X2 |
| 3 | PRD10233-02 | SIDE COVER | LEFT |
| 4 | PRD10234-02 | SIDE COVER | RIGHT |
| 5 | PRD20604A | BOTTOM COVER ASSEMBLY | |
| 6 | PRD10335J-07 | FRONT PANEL ASSEMBLY | D85, INCL. S15 |
| 6 | PRD10335G-07 | FRONT PANEL ASSEMBLY | D80, INCL. S15 |
| 6 | PRD10335H-06 | FRONT PANEL ASSEMBLY | D50, INCL. S15 |
| 6A | PRD30095-21 | PLATE | D85 |
| 6A | PRD30095-19 | PLATE | D80 |
| 6A | PRD30095-20 | PLATE | D50 |
| 6B | — | MARK | "JVC" MARK |
| 6C | PRD31074-01-03 | STAY | |
| 6D | PRD31066-01-01 | BUTTON | X2, STANBY, SEARCH |
| 6E | PRD31066-02-01 | BUTTON | PAUSE/STILL |
| 6F | PRD31066-03-01 | BUTTON | FF |
| 6G | PRD31066-04-01 | BUTTON | PLAY |
| 6H | PRD31066-05-01 | BUTTON | STOP |
| 6J | PRD31066-09 | BUTTON | D85/D80, REC |
| 6K | PRD31066-07-01 | BUTTON | REW |
| 6L | PRD31066-08-01 | BUTTON | EJECT |
| 6M | PRD31067-01-01 | BUTTON | COUNTER RESET |
| 6N | PRD30704-10 | BUTTON | D85/D80, X4, SET, SELECT, FINE, TRACKING |
| 6N | PRD30704-10 | BUTTON | D50, X3, SET, SELECT, TRACKING |
| 6P | PRD30704-12 | BUTTON | MENU |
| 7 | PRD41819A-02 | JOG KNOB ASSEMBLY | INCL. S36 |
| 8 | PRD31052A-06 | SEARCH KNOB ASSEMBLY | |
| 9 | PRD44134 | SPACER | |
| 10 | PRD30026-47 | COLLAR | |
| 13 | PRD31080-01-01 | DOOR | |
| 14 | PRD31082-01-03 | KNOB | D85/D80, X4 |
| 14 | PRD31082-01-03 | KNOB | D50, X2 |
| 15 | — | SERIAL NO PLATE | |
| 16 | PRD43146 | PLATE | D85/D80, X5 |
| 16 | PRD43146 | PLATE | D50, X3 |
| 17 | PRD42830 | SLIDE SWITCH KNOB | D85/D80, X5 |
| 17 | PRD42830 | SLIDE SWITCH KNOB | D50, X3 |
| 18 | PRD43146-02 | KNOB PLATE | D85/D80 |
| 19 | PRD44020 | SLIDE SWITCH KNOB | D85/D80, X3, (T/C) |
| 21 | PRD31057 | HOLDER(S) | |
| 22 | PRD31058 | HOLDER(L) | |
| 23 | PRD42578-04 | REAR LABEL | |
| 24 | — | RATING LABEL | |
| 25 | PGS21115A | SEARCH/JOG BOARD ASSEMBLY | |
| 26 | — | MASKING SHEET | |
| 27 | Q03093-826 | POLI SLIDER | |
| 28 | PRD44857 | EARTH | |
| 29 | PGZ02449 | S. FINGER | X2 |
| 30 | PRD44858 | EARTH | X2 |
| 31 | PRD31231 | COVER | |
| 32 | PRD30030-149 | PAD | X4 |
| 33 | PGZ02450 | GASKET | X2 |
| S1 | SDST3008Z | SCREW | M3×8, X5 |
| S2 | SDSP3006M | SCREW | M3×6, X6 |
| S3 | DPSP3016Z | SCREW | M3×16, X4 |
| S4 | SDSP3008M | SCREW | M3×8 |
| S5 | SDSP3010Z | SCREW | M3×10, X2 |
| S15 | SDSF2606Z | SCREW | M2.6×6, X2 |
| S16 | DPSP2016Z | SCREW | M2×16, X3 |
| S34 | SXST4008N | SCREW | M4×8, X8 |
| S36 | YWS3004B | SCREW | M3×4 |
| S41 | PRD30088-03 | SCREW | X2 |
| S52 | SDSP3006Z | SCREW | X2 |
| W2 | PQM30017-6 | SLIT WASHER | |

## 5.2 CHASSIS ASSEMBLY [M] [3]

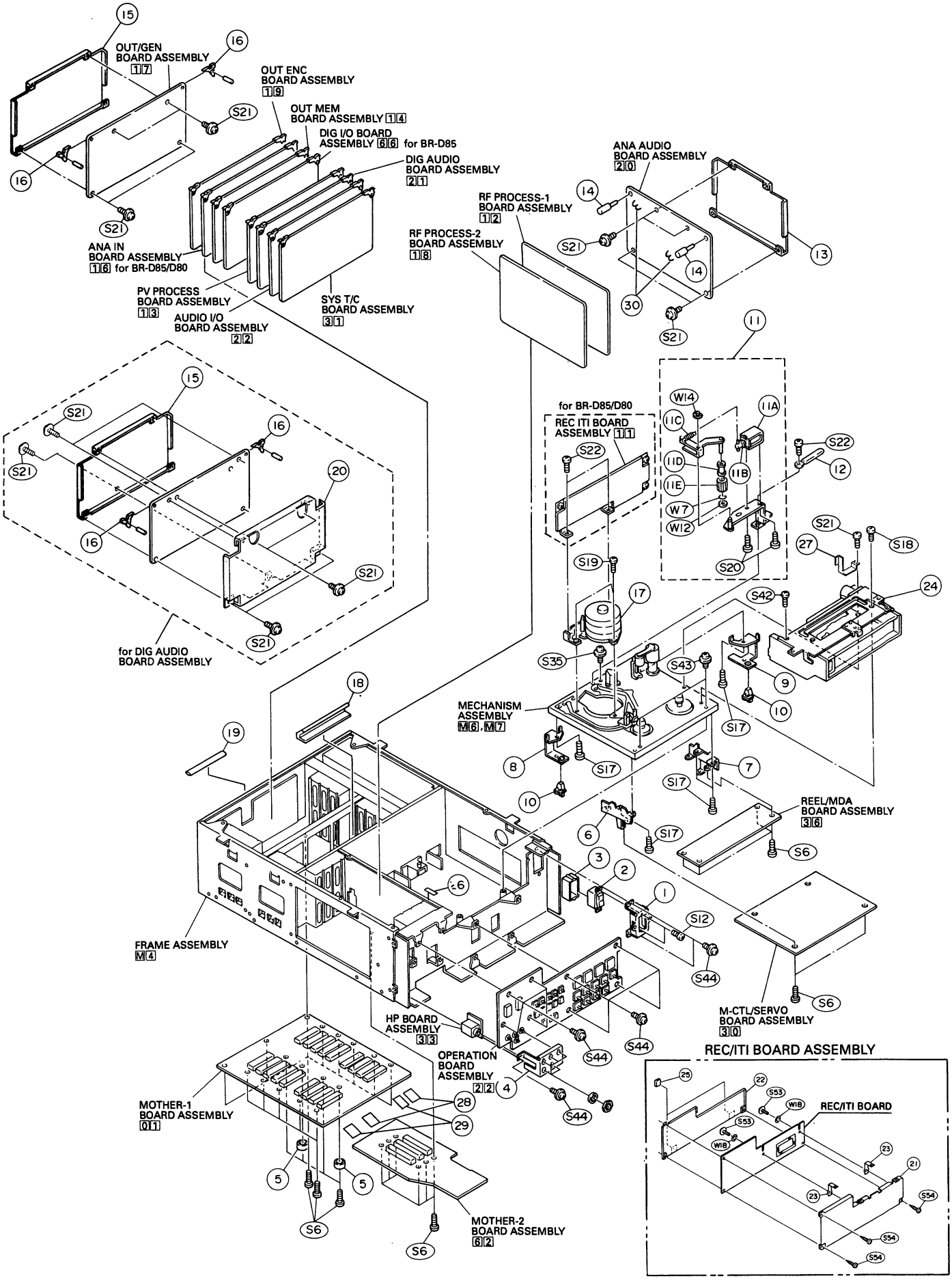

## ● CHASSIS ASSEMBLY LIST [M][3]

[M][3][M][M]□□□□

| Symbol No. | Part No. | Pert Neme | Description |
|---|---|---|---|
| 1 | PRD44361 | BRACKET | |
| 2 | QSE2A21-L01 | SWITCH | |
| 3 | PRD42023 | SWITCH COVER | |
| 4 | PRD31065 | BRACKET | |
| 5 | PGD40255 | SPACER | X2 |
| 6 | PRD44425-01-01 | PWB BRACKET | |
| 7 | PRD44424-01-01 | PWB BRACKET | |
| 8 | PRD44427 | PWB BRACKET | |
| 9 | PRD44426 | PWB BRACKET | |
| 10 | PGZ00606-03 | PWB HOLDER | X2 |
| 11 | PRD30797B | HEAD CLERNER ASSEMBLY | INCL.S20,W7,W12,W14 |
| 11A | PGZ01973 | SOLENOID ASSEMBLY | |
| 11B | PRD30023-36 | COMPRESSION SPRING | |
| 11C | PRD30024-62 | TENSION SPRING | |
| 11D | PQ45689 | CLEANER HOLDER | |
| 11E | PQ44837 | HEAD CLEANER | |
| 12 | PU49485-4 | WIRE CLAMP | |
| 13 | PRD20531 | SHIELD CASE | X3, ANA AUDIO, RF PROCESS 1, RF PROCESS 2 |
| 14 | PGZ01128-02 | SPACER | X6, ANA AUDIO, RF PROCESS 1, RF PROCESS 2 |
| 15 | PRD20530-01-02 | SHIELD CASE | D85: X9, D80/D50: X8 |
| 16 | PGZ00582 | EJECTOR | D85: X20, D80/D50: X18 |
| 17 | PDR2010A | DRUM ASSEMBLY | D85/D80 |
| 17 | PDR2008A | DRUM ASSEMBLY | D50 |
| 18 | PGZ02450 | GASKET | |
| 19 | PGZ02451 | GASKET | |
| 20 | PRD20579-01-01 | SHIELD CASE | |
| 21 | PRD31203 | SHIELD COVER A | D85/D80: REC/ITI BOARD |
| 22 | PRD31204-01-01 | SHIELD COVER B | D85/D80: REC/ITI BOARD |
| 23 | PRD44235 | BOARD BRACKET | X2, D85/D80: REC/ITI BOARD |
| 24 | — | CASSETTE HOUSING ASSEMBLY | Refer to [M][8] |
| 25 | PRD30030-76 | PAD | X2, D85/D80 |
| 26 | PRD44925 | LABEL | |
| 27 | PRD44931 | BRACKET | |
| 28 | PGW0206-080240 | FFC | X2 |
| 29 | PGW0206-080180 | FFC | X2 |
| 30 | PU59311-2 | WIRE CLAMP | X2, ANA AUDIO BOARD |
| S6 | SBST3006Z | SCREW | M3×6,X29 |
| S12 | LPSP3006Z | SCREW | M3×6,X2 |
| S17 | SDST2605Z | SCREW | M2.6×5,X6 |
| S18 | SDSP2608Z | SCREW | M2.6×8 |
| S19 | LPSP2612Z | SCREW | M2.6×12,X3 |
| S20 | SPSP2003Z | SCREW | M2×3,X2 |
| S21 | DPSP2606Z | SCREW | M2.6×6,D85: X56, D80/D50: 52 |
| S22 | LPSP2606Z | SCREW | M2.6×6,D85/D80: X3, D50: X1 |
| S35 | LPSP4016Z | SCREW | M4×16 |
| S42 | PRD30027-04 | SCREW | M2.6×6 |
| S43 | PRD30082-02 | FLANGE SCREW | M3×5, X2 |
| S44 | PRD30082 | SCREW | M3×4.5, X11 |
| S53 | DPSP2608Z | SCREW | M2.6×8, X2, D85/D80: REC/ITI BOARD |
| S54 | SDSP2606Z | SCREW | M2.6×6, X3, D85/D80: REC/ITI BOARD |
| W7 | Q03093-829 | PLASTIC WASHER | |
| W12 | PQM30017-25 | SLIT WASHER | |
| W14 | REE2500 | E WASHER | |
| W18 | WBS2600N | LOCK WASHER | X2, D85/D80: REC/ITI BOARD |

## ● FRAME ASSEMBLY LIST [M][4]

[M][4][M][M]□□□□

| Symbol No. | Part No. | Part Name | Description |
|---|---|---|---|
| 1 | PRD10327-01-02 | FRONT FRAME | |
| 2 | PRD10334-01-02 | FRAME | MOTHER 2 |
| 3 | PRD10330-01-03 | CENTER FRAME | |
| 4 | PRD10331-01-02 | REAR FRAME | |
| 5 | PRD10328-01-02 | SIDE FRAME | LEFT |
| 6 | PRD10329-01-02 | SIDE FRAME | RIGHT |
| 7 | PRD10333-01-02 | FRAME | SW REG. |
| ⚠ 8 | PGZ02471A | SW REG ASSEMBLY | |
| 9 | PGZ02212 | SPACER | X3 |
| 10 | PRD20546 | GUIDE RAIL | X6 |
| 11 | PRD31055A | MAIN DECK BRACKET AS8EMBLY | FRONT |
| 12 | PRD44359A-01 | MAIN DECK BRACKET ASSEMBLY | REAR |
| 13 | PRD44740-01-02 | BRACKET | SW REG. |
| 14 | PGZ00493-02 | GUIDE RAIL | X2 |
| 15 | PRD31059 | GUIDE RAIL BRACKET | X2 |
| 16 | PRD43816 | FOOT | X8 |
| 17 | PGZ01664 | EDGE SADDLE | X2 |
| 18 | PU494S5-3 | WIRE CLAMP | X3 |
| 19 | PU54969 | WIRE CLAMP | X3 |
| 20 | PEME0796-03 | CLAMP | X7 |
| 21 | PGZ00452 | SPACER | X3 |
| 22 | PGZ02211 | CLAMP | X2 |
| 23 | PGZ02449 | S. FINGER | X7 |
| 24 | PRD44933 | LABEL | |
| S6 | SBST3006Z | SCREW | M3×6,X50 |
| S7 | SDST3006R | SCREW | M3×6,X10 |
| S8 | SBST3010Z | SCREW | M3×10,X8 |
| S13 | DPSP3006Z | SCREW | M3×6,X6 |

## 5.3 FRAME ASSEMBLY M4

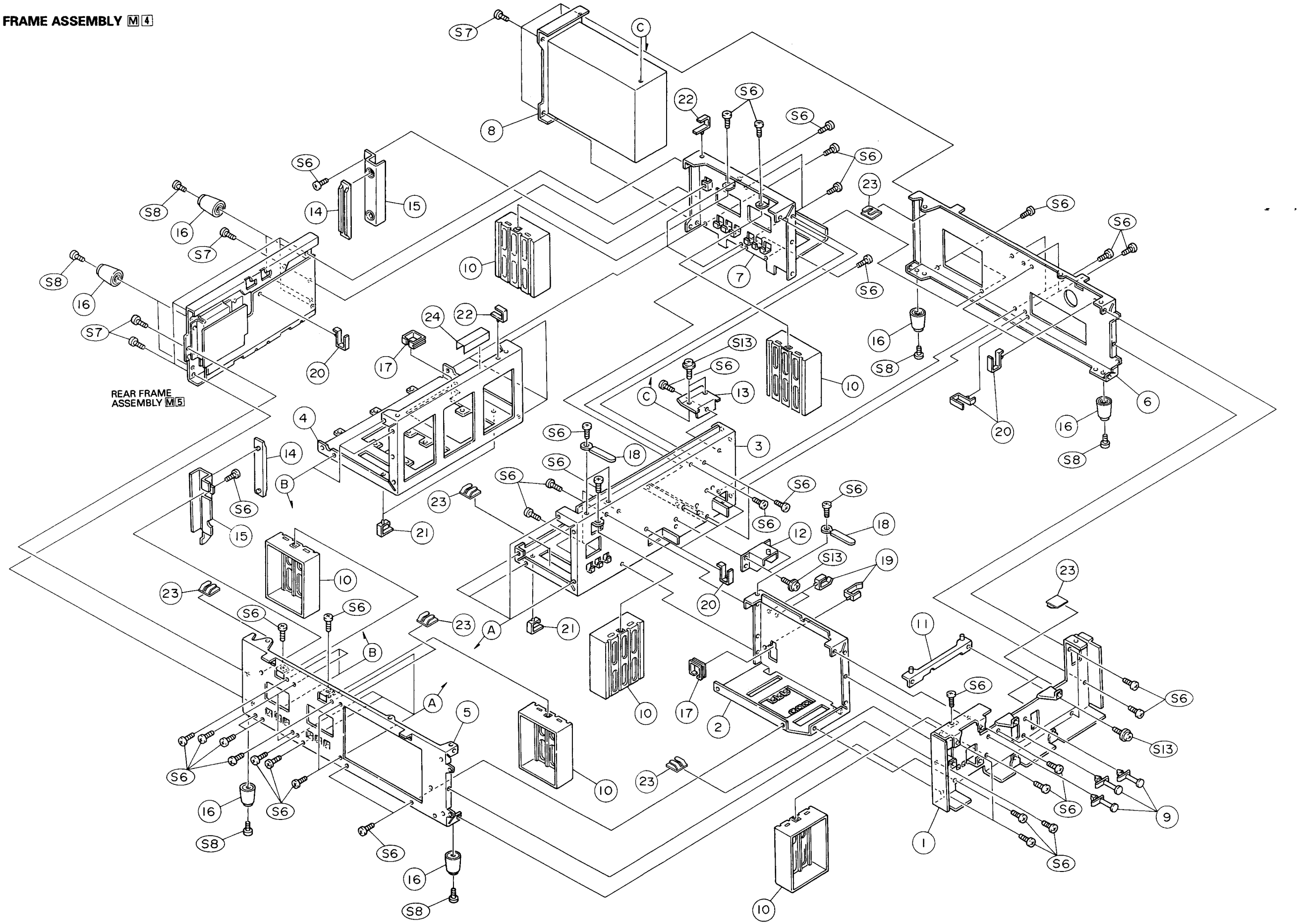



5-7

## 5.4 REAR FRAME ASSEMBLY M5

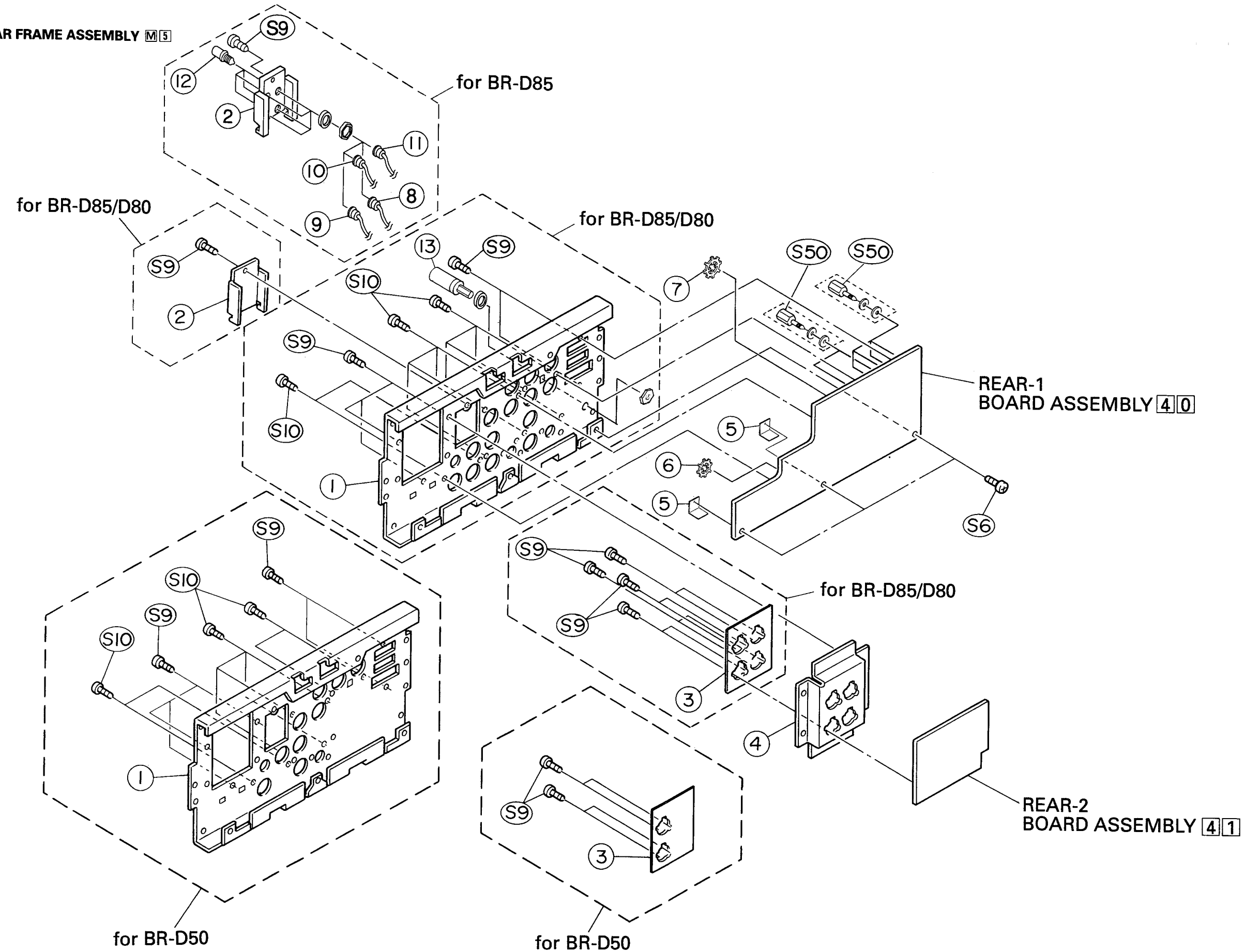

● REAR FRAME ASSEMBLY LIST [M][5]

[M][5][M][M]□□□□

| Symbol No. | Part No. | Part Name | Description |
|---|---|---|---|
| 1 | PRD10332-05-04 | REAR FRAME | D85/D80 |
| 1 | PRD10332-06-04 | REAR FRAME | D50 |
| 2 | PRD31060-02 | PANEL | D85 |
| 2 | PRD31060 | PANEL | D80/D50 |
| 3 | PRD31087-01-01 | SHEET | D85/D80, AUDIO |
| 3 | PRD31087-02-01 | SHEET | D50, AUDIO |
| 4 | PRD31062 | PANEL | |
| 5 | PRD44872 | EARTH | X2 |
| 6 | PRD44859 | RING | X14, D85/D80, for BNC |
| 6 | PRD44859 | RING | X9, D50, for 8NC |
| 7 | PRD44860 | RING | for RCA |
| 8 | PGZ02213-03 | WIRE ASSEMBLY | D85, WHITE |
| 9 | PGZ02213-04 | WIRE ASSEMBLY | D85, ORANGE |
| 10 | PGZ02213-01 | WIRE ASSEMBLY | D85, BLUE |
| 11 | PGZ02213-02 | WIRE ASSEMBLY | D85, YELLOW |
| 12 | PGZ02214 | BNC CONNECTOR | X4, D85 |
| 13 | E03619-001 | GND TERMINAL | |
| S6 | SBST3006Z | SCREW | M3×6,X3 |
| S9 | SDSP3006R | SCREW | M3×6,D85/D80 X14 |
| S9 | SDSP3006R | SCREW | M3×6,D50 X10 |
| S10 | SDSF3010R | SCREW | M3×10,D85/D80 X10 |
| S10 | SDSF3010R | SCREW | M3×10,D50 X8 |
| S50 | PGZ02266 | SCREW | M3×10,X6 |

## 5.5 MECHANISM-1 ASSEMBLY M6

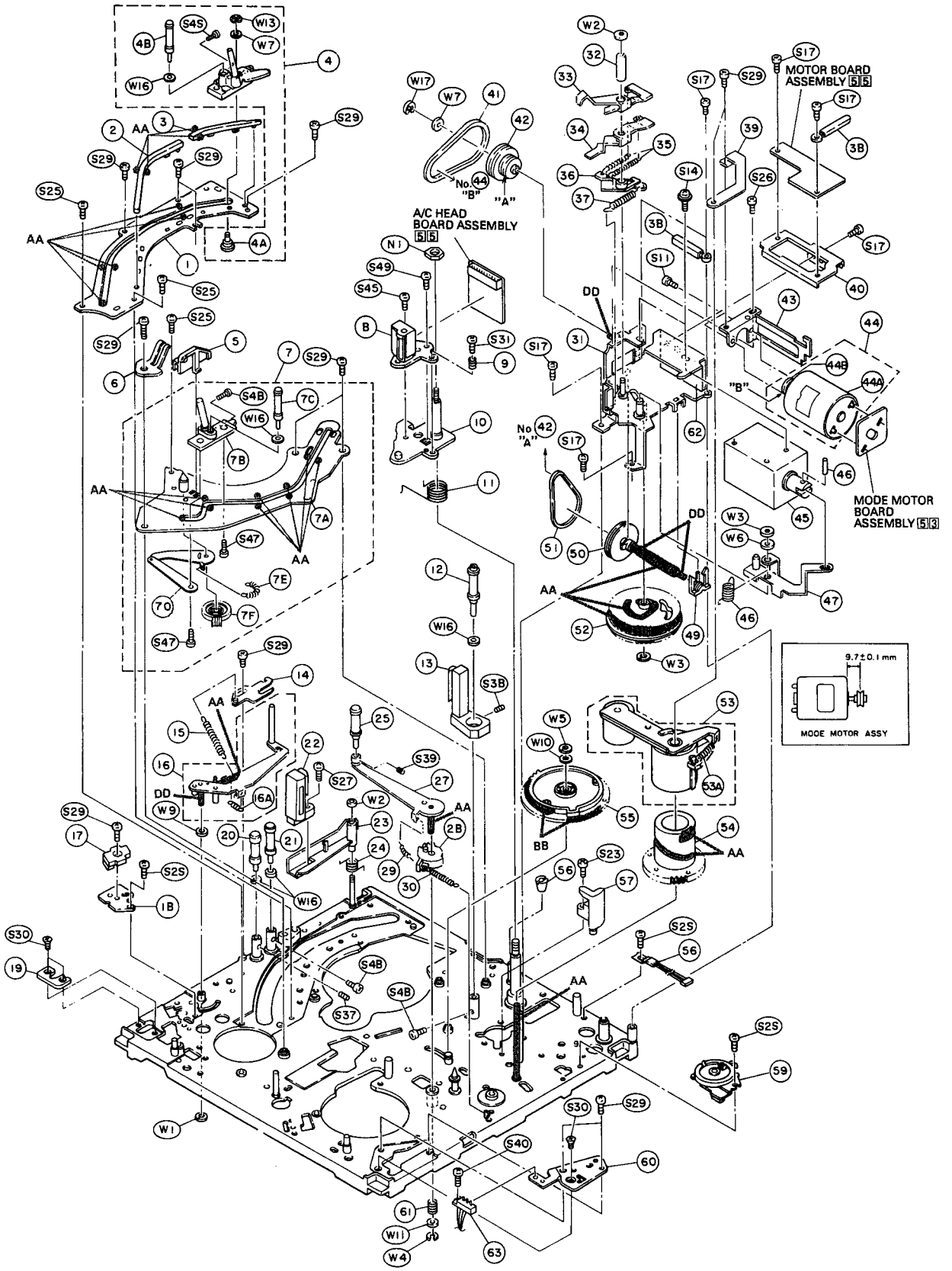


| Categery | JVC part number | MARK |
|---|---|---|
| Grease | MOS2-C | AA |
| | OB-TS-1 | BB |
| Oil | COSMO-HV66 | DD |

**NOTE:** The section marked in **AA**,**BB** and **DD** indicate lubrication and greasing areas.
When checking or repairing this mechanism, make sure that the specified oil or grease has been applied to every point marked with **AA**,**BB** or **DD**

## ● MECHANISM ASSEMBLY LIST M6

M6MM□□□□

| Symbol No. | Pert No. | Pert Neme | Description |
|---|---|---|---|
| 1 | PRD30806-01-02 | SUPPLY SUB DECK | |
| 2 | PRD3080B | GUIDE RAIL 1 | SUPPLY |
| 3 | PQ33995 | GUIDE RAIL 2 | SUPPLY |
| 4 | PRD31091B-02 | SUPPLY P.BASE ASSEMBLY | INCL.W7,W13 |
| 4A | PRD43671-01-02 | STOPPER | |
| 4B | PRD44966A | GUIDE ROLLER ASSEMBLY | |
| 5 | PRD44268 | TAPE GUIDE | |
| 6 | PRD44276 | EARTH PLATE | |
| 7 | PRD44428B | TAKE UP LOADING ARM ASSEMBLY | INCL. S47, S48, W16 |
| 7A | PRD43627A-01 | GUIDE RAIL | |
| 7B | PRD31092C-03 | TAKE UP P.BASE ASSEMBLY | INCL. 7C, W16, S48 |
| 7C | PRD44966A | GUIDE ROLLER ASSEMBLY | |
| 7D | PQ33997 | SPRING STAY | TAKE UP |
| 7E | PQM30001-316 | TENSION SPRING | |
| 7F | PQ33997 | SPRING STAY | |
| 8 | PGZ01840 | A/C HEAD ASSEMBLY | |
| 9 | PQM30002-197 | SPRING | |
| 10 | PRD44127A | HEAD ARM ASSEMBLY | |
| 11 | PQ44119 | TORSION SPRING | |
| 12 | PRD44403B | TAKE UP ROLLER ASSEMBLY | |
| 13 | PRD44412A-01 | TAKE UP SCRAPER ASSEM8LY | |
| 14 | PRD43902A | SP.ADJ ASSEMBLY | |
| 15 | PRD43935 | TENSION SPRING | |
| 16 | PRD43638A-01 | TENSION ARM | |
| 16A | PRD30024-65 | TENSION SPRING | |
| 17 | PU61338 | TENSION SENSOR | |
| 18 | PRD43466-01-02 | BASE | |
| 19 | PRD43890 | SOCKET L | |
| 20 | PRD43721A | GUIDE ROLLER | |
| 21 | PRD43721A | GUIDE ROLLER | |
| 22 | PRD44399A | FE HEAD ASSEMBLY | |
| 23 | PRD30817 | FE HEAD ARM | |
| 24 | PRD44149 | TORSION SPRING | |
| 25 | PRD43660A-02 | GUIDE ROLLER | |
| 27 | PRD43658A | TAKE UP GUIDE ARM | |
| 28 | PRD44039 | GEAR | |
| 29 | PRD30023-54 | COMPRESSION SPRING | |
| 30 | PRD30024-67 | TENSION SPRING | |
| 31 | PRD44105A | S.BRACKET | |
| 32 | PRD44108 | COLLAR | |
| 33 | PRD30971-01-D1 | LOCK LEVER 3 | |
| 34 | PRD44107 | LOCK LEVER 2 | |
| 35 | PQM30001-314 | TENSION SPRING | X2 |
| 36 | PQ33992-1-1 | LOCK LEVER 1 | |
| 37 | PQM30001-313 | TENSION SPRING | |
| 38 | PU49485-4 | WIRE CLAMP | X2 |
| 39 | PRD44103 | ARM | |
| 40 | PRD31029 | D.TERM PWB STAY | |
| 41 | PRD30022-18 | LOADING BELT | MODE MOTOR |
| 42 | PRD43968 | PULLEY | |
| 43 | PRD30969 | MOTOR BRACKET | |
| 44 | PRD44123A | MODE MOTOR ASSEMBLY | |
| 44A | PU60628-3-2 | MODE MOTOR | |
| 44B | PQ43546-1-2 | MOTOR PULLEY | |
| 45 | PGZ01845 | SOLENOID ASSEMBLY | |

| Symbol No. | Part No. | Part Name | Description |
|---|---|---|---|
| 46 | PSE3010 | SPRING PIN | |
| 47 | PRD44106A | S.LEVER ASSEMBLY | |
| 48 | PRD44113 | TORSION SPRING | |
| 49 | PQ44129 | WORM BEARING 2 | |
| 50 | PRD44122A | WORM GEAR | |
| 51 | PRD30022-17 | LOADING BELT | WORM GEAR |
| 52 | PQ21313-1-1 | CAM GEAR | |
| 53 | PRD43387A-06 | PINCH ROLLER ARM ASSEMBLY | |
| 53A | PRD30024-60 | TENSION SPRING | |
| 54 | PQ21312 | P.ROLLER CAM | |
| 55 | PQ21315-1-2 | CONTROL CAM | |
| 56 | PRD44861 | TAPER NUT | D85/D80 |
| 56 | PRD44241 | TAPER NUT | D50 |
| 57 | PRD44121-01-01 | ARM GUIDE | |
| 58 | QSD0002-001 | DEW SENSOR | |
| 59 | PU61339-1-1 | ROTARY ENCORDER | |
| 60 | PRD44379-01-01 | SOCKET R | |
| 61 | PRD30023-55 | COMPRESSION SPRING | |
| 62 | PRD30030-135 | PAD | |
| 63 | PGZ02452 | W SENSOR | |
| S11 | SPSP3003Z | SCREW | M3×3,X2 |
| S14 | DPSP3005Z | SCREW | M3×5,X2 |
| S17 | SDST2605Z | SCREW | M2.6×6,X7 |
| S23 | SDST2606Z | SCREW | M2.6×6 |
| S25 | SDSP2603.5M | SCREW | M2.6×3,X3 |
| S26 | SDSP2604Z | SCREW | M2.6×4 |
| S27 | SDSF2608M | SCREW | M2.6×8 |
| S28 | SDSP2004Z | SCREW | M2×3,X3 |
| S29 | SDSP2605Z | SCREW | M2.6×5,X11 |
| S30 | SSSP2606Z | SCREW | M2.6×6,X3 |
| S31 | SDSP2612Z | SCREW | M2.6×12 |
| S37 | YFS2603B | SET SCREW | |
| S38 | YFS2605B | SCREW | |
| S39 | YFS2003B | SCREW | M2×3 |
| S40 | SPSH2040M | SCREW | M2.6×6 |
| S45 | PQ43687B | SCREW | M2.6×8 |
| S47 | PRD43819-02 | SCREW | M2.6×4.5,X2 |
| S48 | PQ45295 | SCREW | X4 |
| S49 | PQ44621 | SCREW | M2.5×12 |
| S50 | PQ43687B | SCREW | M2.6×8 |
| S52 | SPSH2040M | SCREW | M2×4 |
| W1 | PQM30017 | WASHER | |
| W2 | PQM30017-6 | SLIT WASHER | X2 |
| W3 | PQM30017-12 | SLIT WASHER | X2 |
| W4 | PQM30017-13 | SLIT WASHER | |
| W5 | PQM30017-28 | SLIT WASHER | |
| W6 | Q03093-818 | WASHER | |
| W7 | Q03093-829 | PLASTIC WASHER | X2 |
| W9 | Q03093-838 | PLASTIC WASHER | |
| W10 | Q03093-849 | WASHER | |
| W11 | WSS4000Z | WASHER | |
| W13 | REE1500 | E.WASHER | |
| W16 | PRD43925 | O RING | X6 |
| W17 | REE1200 | E RING | |
| N1 | PQ40353 | NYLON NUT | |

## 5.6 MECHANISM-2 ASBEMBLY M7

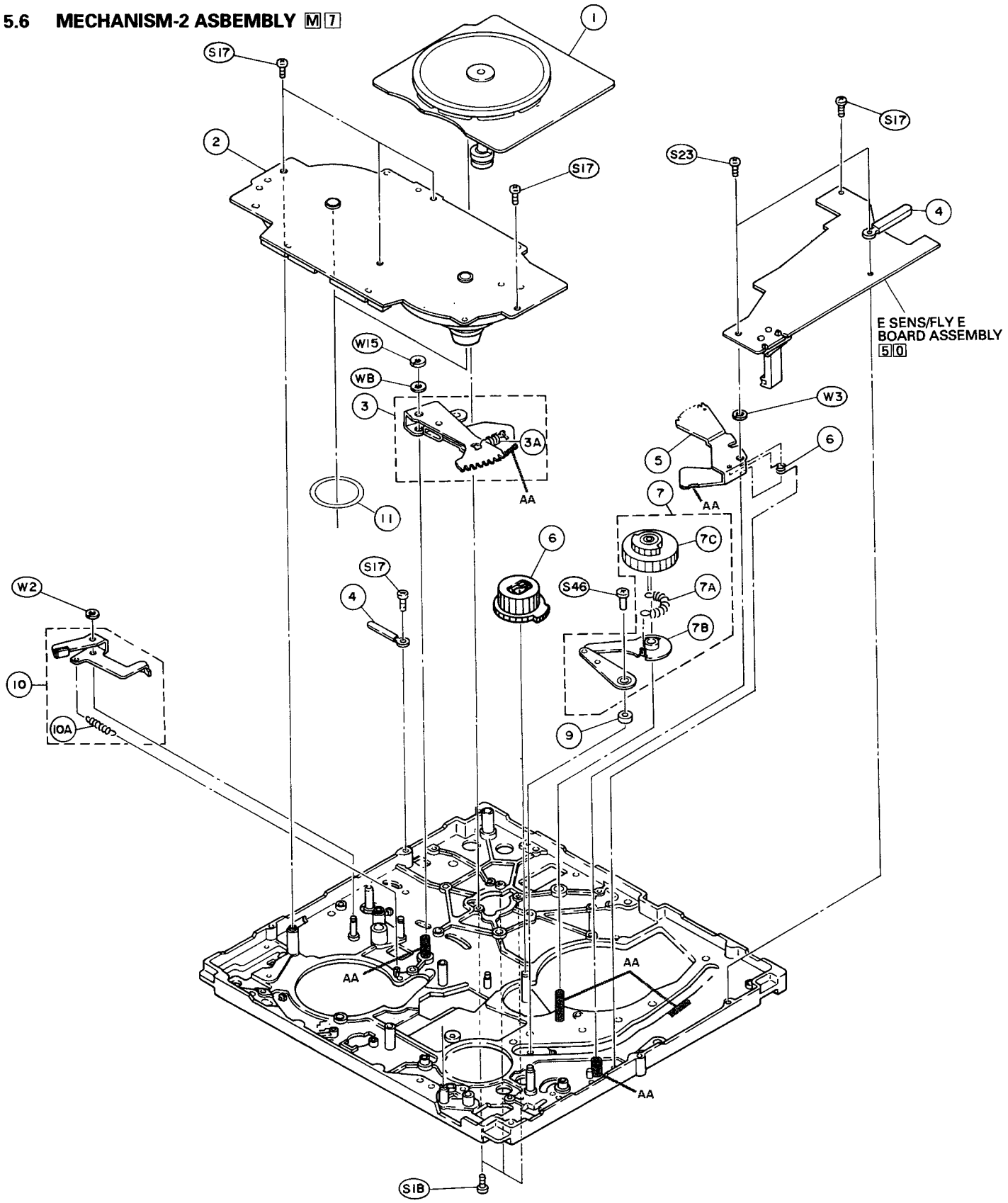


| Category | JVC part number | MARK |
|---|---|---|
| Orease | MOS2-C | AA |
| Oil | COSMO-HV56 | DD |

**NOTE:** The section marked in **AA** and **DD** indicate lubrication and greasing areas.
When checking or repairing this mechanism, make sure that the specified oil or grease has been applied to every point marked with **AA** and **DD**



● **MECHANISM-2 ASSEMBLY LIST** M7

M7MM□□□□

| Symbol No. | Part No. | Part Name | Desoription |
|---|---|---|---|
| 1 | PGZ02446 | CAPSTAN MOTOR ASSEMBLY | |
| 2 | PGZ02447 | REEL MOTOR ASSEMBLY | |
| 3 | PQ45306B-3 | GEAR | |
| 3A | PQM30001-320 | TENSION SPRING | |
| 4 | PU494B5-4 | WIRE CLAMP | X2 |
| 5 | PQ34007 | CANCEL LEVER | |
| 6 | PQ45313 | TORSION SPRING | |
| 7 | PRD43923A | SUPPLY LOADING ARM ASSEMBLY | |
| 7A | PQM30001-31B | TENSION SPRING | SUPPLY |
| 7B | PRD43620A | LOADING ARM | SUPPLY |
| 7C | PQ34003-1-2 | LOADING GEAR | SUPPLY |
| 8 | PQ34033 | TAKE UP LOADING GEAR | |
| 9 | PRD44019 | COLLAR | |
| 10 | PRD43479A-01 | REEL BRAKE ASSEMBLY | |
| 10A | PRD30024-5B | TENSION SPRING | |
| 11 | PRD44975 | SHEET | X2, Note 1) |
| S17 | SDST2605Z | SCREW | M2.6×5,X6 |
| S1B | SDSP260BZ | SCREW | M2.6×6,X3 |
| S23 | SDST2606Z | SCREW | M2.6×6,X2 |
| S46 | PRD442B7 | SCREW | M2.6×4.5 |
| W2 | PQM30017-6 | SLIT WASHER | |
| W3 | PQM30017-12 | SLIT WASHER | |
| WB | Q03093-B33 | PLASTIC WASHER | |
| W15 | REE3000 | E WASHER | |

Note 1) Put the SHEET on the REEL DISK as it is not out of the REEL DISK.

5-13

## 5.7 CASSETTE HOUSING ASSEMBLY M 8

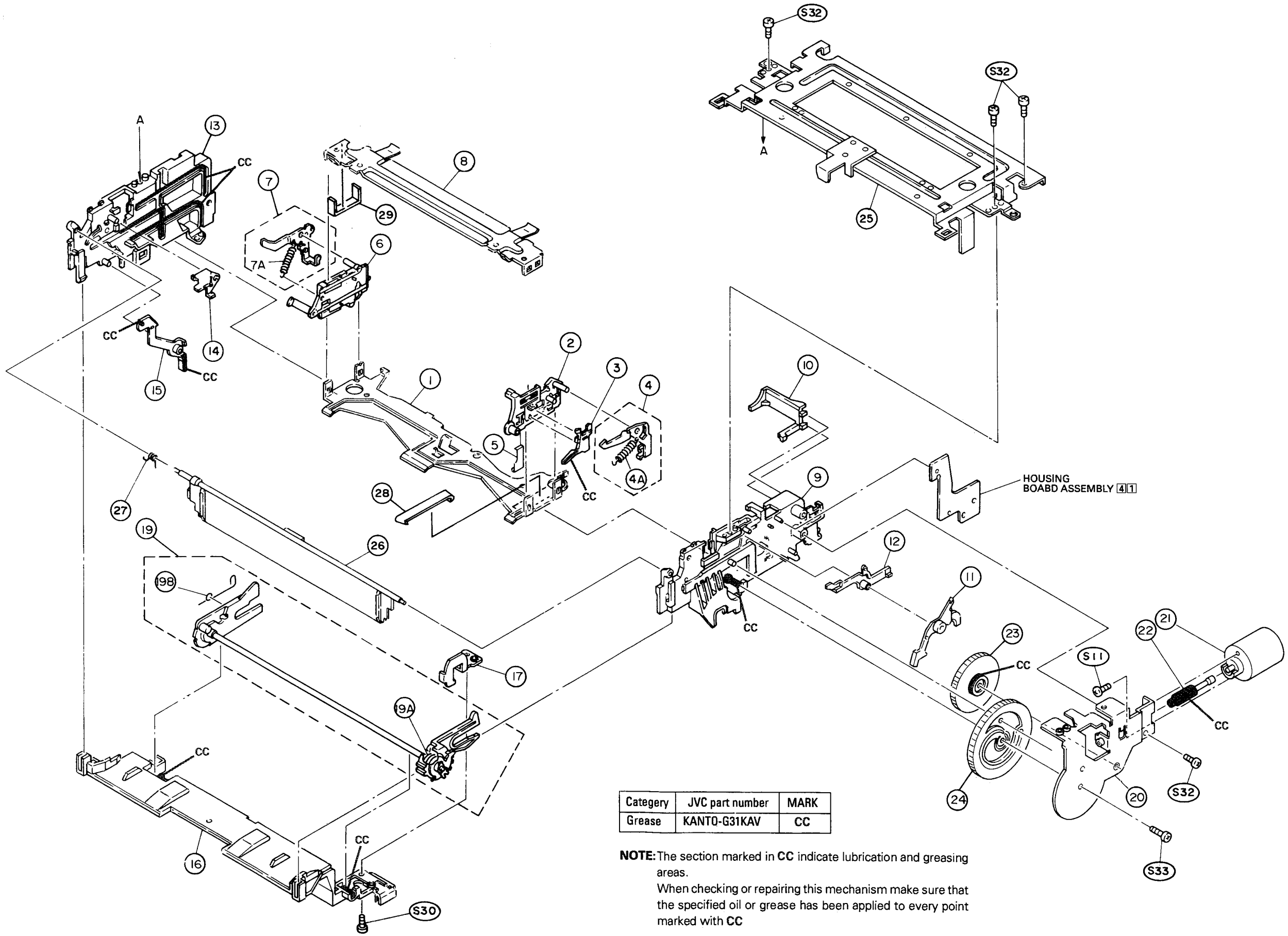


| Categery | JVC part number | MARK |
|---|---|---|
| Grease | KANTO-G31KAV | CC |

**NOTE:** The section marked in **CC** indicate lubrication and greasing areas.
When checking or repairing this mechanism make sure that the specified oil or grease has been applied to every point marked with **CC**


5-14

● **CASSETTE HOUSING ASSEMBLY LIST** [M][8]

**(PGS21023B-04 CASSETTE HOUSING ASSEMBLY)** [M][8][M][M][ ][ ][ ][ ]

| Symbol No. | Part No. | Part Neme | Description |
|---|---|---|---|
| 1 | PRD20536 | CASSETTE HOLDER | *1 |
| 2 | PQ11278-01-01 | SIDE HOLDER(R) | *1 |
| 3 | PQ45459 | LID OPENER | |
| 4 | PQ43596F | L.LEVER(R) ASSEMBLY | |
| 4A | PQ43597-1-5 | TENSION SPRING | |
| 5 | PRD44285 | EARTH PLATE | |
| 6 | PQ11279 | SIDE HOLDER(L) | *1 |
| 7 | PQ45539A-01 | LOCK LEVER(L) ASSEMBLY | |
| 7A | PQ43597-2 | TENSION SPRING | |
| 8 | PRD30982B | H.STAY ASSEMBLY | *1 |
| 9 | PQ11281-01-06 | HOUSING STAY(R) | |
| 10 | PQ34097 | GUIDE | |
| 11 | PQ34098 | SENSOR LEVER | |
| 12 | PRD30946 | INSERT SWITCH LEVER | |
| 13 | PQ11282-01-07 | HOUSING STAY(L) | |
| 14 | PQ45479-01-02 | DOOR STOPPER | |
| 15 | PQ34100 | DOOR OPENER | |
| 16 | PRD10301-01-04 | FRONT BRACKET | |
| 17 | PRD43729 | BASE BRACKET | |
| 19 | PQ34103A-04 | ARM | |
| 19A | PRD43806 | TORSION SPRING | |
| 19B | PQ43605 | TORSION SPRING | |
| 20 | PRD30983A | MOTOR BRACKET ASSEMBLY | |
| 21 | PQ45489A | MOTOR ASSEMBLY | |
| 22 | PQ45474 | WORM GEAR | |
| 23 | PQ34109-01-01 | CONNECT GEAR | |
| 24 | PQ34110-01-01 | CAM | |
| 25 | PRD30981A | TOP FRAME ASSEMBLY | |
| 26 | PRD30962-02-06 | CASSETTE HOUSING DOOR | |
| 27 | PRD44088 | TORSION SPRING | |
| 28 | PRD30030-144 | PAD | |
| 29 | PRD44319 | SHEET | |
| S11 | SPSP3003Z | SCREW | M3×3,X2 |
| S30 | SSSP2606Z | SCREW | M2.6×6 |
| S32 | SDSF2608Z | SCREW | M2.6×8,X4 |
| S33 | SDSF2612Z | SCREW | M2.6×12 |

*1: When this part is removed, the holders of No. 2 and No. 6 may possibly damaged during the removing work. When the holder of No. 1 or the stay of No. 8 is replaced, make sure to replace the holders of No. 2 and No. 6 with new ones at the same time by way of precaution.

# SECTION 6

# ELECTRICAL PARTS LIST

# CONTENTS


6.1 MOTHER-1 BOARD ASSEMBLY LIST ..... 6-2
6.2 MOTHER-2 BOARD ASSEMBLY LIST ..... 6-2
6.3 REC/ITI BOARD ASSEMBLY LIST ..... 6-3
6.4 RF PROCESS1 BOARD ASSEMBLY LIST ..... 6-7
6.5 PV PROCESS BOARD ASSEMBLY LIST ..... 6-13
6.6 OUT MEM BOARD ASSEMBLY LIST ..... 6-18
6.7 ANA IN BOARD ASSEMBLY LIST ..... 6-22
6.8 OUT/GEN BOARD ASSEMBLY LIST ..... 6-32
6.9 RF PROCESS2 BOARD ASSEMBLY LIST ..... 6-41
6.10 OUT ENC BOARD ASSEMBLY LIST ..... 6-46
6.11 ANA AUDIO BOARD ASSEMBLY LIST ..... 6-52
6.12 DIG AUDIO BOARD ASSEMBLY LIST ..... 6-58
6.13 AUDIO I/O BOARD ASSEMLBY LIST ..... 6-61
6.14 MCTL/SV BOARD ASSEMBLY LIST ..... 6-65
6.15 SYS/TC BOARD ASSEMBLY LIST ..... 6-70
6.16 OPERATION BOARD ASSEMBLY LIST ..... 6-75
6.17 HP BOARD ASSEMBLY LIST ..... 6-78
6.18 REEL MDA BOARD ASSEMBLY LIST ..... 6-78
6.19 REAR1 BOARD ASSEMBLY LIST ..... 6-79
6.20 REAR2 BOARD ASSEMBLY LIST ..... 6-80
6.21 ESENS/FLYE BOARD ASSEMBLY LIST ..... 6-81
6.22 MODE MOTOR BOARD ASSEMBLY LIST ..... 6-82
6.23 CASSETTE HOUSING BOARD ASSEMBLY LIST ..... 6-82
6.24 MECHA TRM BOARD FASSEMBLY LIST ..... 6-82
6.25 A/C HEAD BOARD ASSEMBLY LIST ..... 6-82
6.26 DIG I/O BOARD ASSEMBLY LIST ..... 6-83

# SECTION 6
# ELECTRICAL PARTS LIST

**SAFETY PRECAUTION:**
Parts identified by the ⚠ symbol are critical for safety. Replace only with specified parts numbers.
For maximum reliability and performance, all other replacement parts should be identicel to those specified.

**NOTE:**
- Parts not denoted by parts numbers are not supplied by JVC.
- Abbreviations in this list are as follows:

RESISTORS

In the "Description" column:
All resistance values are in ohms (Ω).
K expresses kilo-ohm (1,000 ohms, kΩ).
M expresses mega-ohm ($10^6$ ohms, MΩ).

In the "Parts Name" column:

| | | |
|---|---|---|
| COMP. RESISTOR | : | Composition Resistor |
| U.F. RESISTOR | : | Non-inflammable Resistor |
| O.M.F. RESISTOR | : | Oxide Metalized Film Resistor |
| FUSI. RESISTOR | : | Fusible Resistor |
| M.P. RESISTOR | : | Metal Plate Resistor |
| M.G. RESISTOR | : | Metal Graze Resistor |
| M.F. RESISTOR | : | Metal Film Resistor |
| W.W. RESISTOR | : | Wire Wound Resistor |

CAPACITORS

In the "Description" column:
All capacitance values are in microfarad (μF) unless otherwise indicated.
P expresses picofarad ($10^{-12}$ ferad, pF).

In the "Parts Name" column:

| | | |
|---|---|---|
| TRIM. CAPACITOR | : | Trimmer Capacitor |
| CER. CAPACITOR | : | Ceramic Cepecitor |
| E. CAPACITOR | : | Electrolytic Capacitor |
| TAN. CAPACITOR | : | Tentalum Capacitor |
| MPP CAPACITOR | : | Metalized Polypropylene Capacitor |
| O.F. CAPACITOR | : | Oil Film Capacitor |
| MPF CAPACITOR | : | Metalized Polyfilm Cepaoitor |
| F.M. CAPACITOR | : | Film Mica Capacitor |
| P.P. CAPACITOR | : | Polypropylene Capecitor |
| P.S. CAPACITOR | : | Polystyrene Capacitor |

## B.1 MOTHER-1 BOARD ASSEMBLY LIST [0][1]

**SLK101B-A1A (BR-DB5E/DS0E)**

**SLK101S-B1A (BR-D50E)** [0][1]□□□□□□□

| Symbol No. | Pert No. | Pert Neme | Description |
|---|---|---|---|
| CN1 | PGZ02141-120 | CONNECTOR | 120PIN |
| CN2 | PGZ02141-100 | CONNECTOR | 100PIN |
| CN3 | PGZ02141-120 | CONNECTOR | 120PIN |
| CN4 | PGZ02141-100 | CONNECTOR | 100PIN |
| CN5 | PGZ02141-120 | CONNECTOR | 120PIN |
| CN6 | PGZ02141-100 | CONNECTOR | 100PIN |
| CN7 | PGZ02141-120 | CONNECTOR | 120PIN |
| CN8 | PGZ02141-100 | CONNECTOR | 100PIN |
| CN9 | PGZ02141-120 | CONNECTOR | 120PIN |
| CN10 | PGZ02141-100 | CONNECTOR | 100PIN |
| CN11 | PGZ02141-120 | CONNECTOR | 120PIN |
| CN12 | PGZ02141-100 | CONNECTOR | 100PIN |
| CN13 | PGZ02141-120 | CONNECTOR | 120PIN |
| CN14 | PGZ02141-100 | CONNECTOR | 100PIN |
| CN15 | PGZ02141-120 | CONNECTOR | 120PIN |
| CN16 | PGZ02141-100 | CONNECTOR | 100PIN |
| CN17 | PGZ02141-120 | CONNECTOR | 120PIN |
| CN18 | PGZ02141-100 | CONNECTOR | 100PIN |
| CN19 | PU59555-110 | CONNECTOR | 10PIN |
| CN20 | PU60711-124 | CONNECTOR | 24PIN |
| CN21 | PU60711-118 | CONNECTOR | 18PIN |
| CN22 | PU59555-112 | CONNECTOR | 12PIN |
| CN23 | PU59555-109 | CONNECTOR | 9PIN (D85E/D80E) |
| CN24 | PU60711-124 | CONNECTOR | 24PIN |
| CN25 | PU60711-118 | CONNECTOR | 18PIN |
| CN26 | PU59555-113 | CONNECTOR | 13PIN |
| CN27 | PU59555-110 | CONNECTOR | 10PIN |
| CN28 | PU59555-109 | CONNECTOR | 9PIN |
| CN29 | PU59555-110 | CONNECTOR | 10PIN (D85E/D80E) |
| CN30 | PU59555-106 | CONNECTOR | 6PIN |
| CN31 | PU60251-8 | CONNECTOR | 8PIN |
| CN32 | PU60251-10 | CONNECTOR | 10PIN |
| CN33 | PGZ01941-10 | CONNECTOR | 10PIN |
| CN34 | PGZ01941-15 | CONNECTOR | 15PIN |
| CN35 | PGZ01941-15 | CONNECTOR | 15PIN |
| CN36 | PGZ01941-15 | CONNECTOR | 15PIN |
| CN37 | PGZ01941-10 | CONNECTOR | 10PIN |
| CN38 | PGZ01941-15 | CONNECTOR | 15PIN |

## B.2 MOTHER-2 BOARD ASSEMBLY LIST [0][2]

**SLK1019-A1A (BR-DB5E/DB0E)**

**SLK1019-B1A (BR-D50E)** [0][2]□□□□□□□

| Symbol No. | Pert No. | Pert Neme | Description |
|---|---|---|---|
| CN1 | PGZ02141-100 | CONNECTOR | 100PIN |
| CN2 | PGZ02141-100 | CONNECTOR | 100PIN |
| CN3 | PGZ02141-100 | CONNECTOR | 100PIN |
| CN4 | PGZ01941-15 | CONNECTOR | 15PIN |
| CN5 | PGZ01941-15 | CONNECTOR | 15PIN |
| CN6 | PGZ01941-6 | CONNECTOR | 6 PIN |
| CN7 | PU59555-112 | CONNECTOR | 12PIN |
| CN8 | PU59555-107 | CONNECTOR | 7PIN (D85E/D80E) |
| CN9 | PU59555-106 | CONNECTOR | 6PIN (D85E/D80E) |
| CN10 | PU59555-106 | CONNECTOR | 6PIN |
| CN11 | PU59555-110 | CONNECTOR | 10PIN |
| CN12 | PU59555-109 | CONNECTOR | 9PIN |
| CN13 | PU59555-113 | CONNECTOR | 13PIN |
| CN14 | PU60711-124 | CONNECTOR | 24PIN |
| CN15 | PU60711-118 | CONNECTOR | 18PIN |

## 5.3 REC/ITI BOARD ASSEMBLY LIST [1][1]

### SLK1034-A3A (BR-DB5E/DS0E) [1][1]□□□□□□□

| Symboi No. | Part No. | Part Name | Description |
|---|---|---|---|
| IC1 | UPC78L05T-X | I.C.(M) | NEC |
| IC2 | UPC4082G2-X | I.C.(M) | NEC |
| IC3 | TC4053BF-X | I.C.(M) | TOSHIBA |
| IC5 | NJM79L12UA-X | I.C.(M) | JRC |
| IC6 | TC4053BF-X | I.C.(M) | TOSHIBA |
| IC7 | UPC78L05T-X | I.C.(M) | NEC |
| IC8 | DS90C032TM-X | I.C.(M) | NS |
| IC11 | TC74HC4040AF-X | I.C.(M) | TOSHIBA |
| IC13 | TC74VHC153F-X | I.C.(M) | TOSHIBA |
| IC16 | 74F74SJ-X | I.C.(M) | NS |
| IC17 | TC7W32F-X | I.C.(M) | TOSHIBA |
| IC18 | MC10H124M-X | I.C.(M) | MOTOROLA |
| IC19 | NJM79L05UA-X | I.C.(M) | JRC |
| IC20 | TC74HC125AF-X | I.C.(M) | TOSHIBA |
| IC21 | UPC78L12T-X | I.C.(M) | NEC |
| IC22 | NJM79L05UA-X | I.C.(M) | JRC |
| IC23 | NJM79L12UA-X | I.C.(M) | JRC |
| IC24 | NJM79L05UA-X | I.C.(M) | JRC |
| IC25 | UPC78L05T-X | I.C.(M) | NEC |
| IC27 | TC74HC04AF-X | I.C.(M) | TOSHIBA |
| IC28 | UPC78L12T-X | I.C.(M) | NEC |
| IC29 | NJM79L12UA-X | I.C.(M) | JRC |
| IC32 | TC74HC04AF-X | I.C.(M) | TOSHIBA |
| IC33 | UPC78L05T-X | I.C.(M) | NEC |
| IC34 | TA8609F-X | I.C.(M) | TOSHIBA |
| 04 | 2SB709A/QRS/-X | TRANSISTOR | MATSUSHITA |
| 05 | 2SB709A/QRS/-X | TRANSISTOR | MATSUSHITA |
| 09 | 2SB709A/QRS/-X | TRANSISTOR | MATSUSHITA |
| 010 | 2SB709A/QRS/-X | TRANSISTOR | MATSUSHITA |
| Q11 | 2SC3735/4-5/-X | TRANSISTOR | NEC |
| Q12 | 2SC3357-X | TRANSISTOR | NEC |
| 013 | 2SC3357-X | TRANSISTOR | NEC |
| Q14 | 2SC3735/4-5/-X | TRANSISTOR | NEC |
| Q15 | 2SC3357-X | TRANSISTOR | NEC |
| Q16 | 2SB956/R/-W | TRANSISTOR | MATSUSHITA |
| Q17 | 2SC3735/4-5/-X | TRANSISTOR | NEC |
| Q18 | 2SA1462/3-4/-X | TRANSISTOR | NEC |
| Q19 | 2SC3735/4-5/-X | TRANSISTOR | NEC |
| Q20 | 2SC3357-X | TRANSISTOR | NEC |
| Q21 | 2SC3357-X | TRANSISTOR | NEC |
| Q22 | 2SC3735/4-5/-X | TRANSISTOR | NEC |
| Q23 | 2SC3357-X | TRANSISTOR | NEC |
| Q24 | 2SB956/R/-W | TRANSISTOR | MATSUSHITA |
| Q25 | 2SC3735/4-5/-X | TRANSISTOR | NEC |
| Q26 | 2SA1462/3-4/-X | TRANSISTOR | NEC |
| Q27 | 2SC3735/4-5/-X | TRANSISTOR | NEC |
| Q28 | 2SC3357-X | TRANSISTOR | NEC |
| Q29 | 2SC3357-X | TRANSISTOR | NEC |
| Q30 | 2SC3735/4-5/-X | TRANSISTOR | NEC |
| Q31 | 2SC3357-X | TRANSISTOR | NEC |
| Q32 | 2SB956/R/-W | TRANSISTOR | MATSUSHITA |
| Q33 | 2SC3735/4-5/-X | TRANSISTOR | NEC |
| Q34 | 2SA1462/3-4/-X | TRANSISTOR | NEC |
| Q35 | 2SC3735/4-5/-X | TRANSISTOR | NEC |
| Q36 | 2SC3357-X | TRANSISTOR | NEC |
| Q37 | 2SC3357-X | TRANSISTOR | NEC |
| Q38 | 2SC3735/4-5/-X | TRANSISTOR | NEC |
| Q39 | 2SC3357-X | TRANSISTOR | NEC |

| Symboi No. | Part No. | Part Name | Description | |
|---|---|---|---|---|
| Q40 | 2SB956/R/-W | TRANSISTOR | MATSUSHITA | |
| Q41 | 2SC3735/4-5/-X | TRANSISTOR | NEC | |
| Q42 | 2SA1462/3-4/-X | TRANSISTOR | NEC | |
| Q43 | 2SA1462/3-4/-X | TRANSISTOR | NEC | |
| Q44 | 2SC3735/4-5/-X | TRANSISTOR | NEC | |
| Q45 | 2SA1462/3-4/-X | TRANSISTOR | NEC | |
| Q46 | 2SC3735/4-5/-X | TRANSISTOR | NEC | |
| Q47 | 2SC3735/4-5/-X | TRANSISTOR | NEC | |
| Q48 | 2SC3735/4-5/-X | TRANSISTOR | NEC | |
| Q49 | 2SC3735/4-5/-X | TRANSISTOR | NEC | |
| Q50 | 2SK50S-X | FET | NEC | |
| Q51 | 2SK508-X | FET | NEC | |
| Q52 | 2SK508-X | FET | NEC | |
| Q53 | 2SK508-X | FET | NEC | |
| Q54 | 2SK508-X | FET | NEC | |
| Q55 | 2SK508-X | FET | NEC | |
| Q56 | 2SK508-X | FET | NEC | |
| Q57 | 2SK508-X | FET | NEC | |
| Q58 | 2SC3735/4-5/-X | TRANSISTOR | NEC | |
| D1 | DAN202K-X | DIODE | ROHM | |
| D2 | DAN202K-X | DIODE | ROHM | |
| D3 | DAN202K-X | DIODE | ROHM | |
| D4 | DAN202K-X | DIODE | ROHM | |
| D5 | DAP202K-X | DIODE | ROHM | |
| R1 | NRSA63J-472X | M.G.RESISTOR | 4.7k | 1/16W |
| R2 | NRSA63J-682X | M.G.RESISTOR | 6.8k | 1/16W |
| R3 | NRSA63J-561X | M.G.RESISTOR | 560 | 1/16W |
| R10 | NRSA63J-103X | M.G.RESISTOR | 10k | 1/16W |
| R11 | NRSA63J-222X | M.G.RESISTOR | 2.2k | 1/16W |
| R12 | NRSA63J-102X | M.G.RESISTOR | 1k | 1/16W |
| R13 | NRSA63J-102X | M.G.RESISTOR | 1k | 1/16W |
| R14 | NRSA63J-222X | M.G.RESISTOR | 2.2k | 1/16W |
| R15 | NRSA63J-102X | M.G.RESISTOR | 1k | 1/16W |
| R16 | NRSA63J-102X | M.G.RESISTOR | 1k | 1/16W |
| R20 | NRSA63J-472X | M.G.RESISTOR | 4.7k | 1/16W |
| R21 | NRSA63J-682X | M.G.RESISTOR | 6.8k | 1/16W |
| R22 | NRSA63J-561X | M.G.RESISTOR | 560 | 1/16W |
| R26 | NRSA63J-103X | M.G.RESISTOR | 10k | 1/16W |
| R27 | NRSA63J-222X | M.G.RESISTOR | 2.2k | 1/16W |
| R28 | NRSA63J-102X | M.G.RESISTOR | 1k | 1/16W |
| R29 | NRSA63J-102X | M.G.RESISTOR | 1k | 1/16W |
| R30 | NRSA63J-222X | M.G.RESISTOR | 2.2k | 1/16W |
| R31 | NRSA63J-102X | M.G.RESISTOR | 1k | 1/16W |
| R32 | NRSA63J-102X | M.G.RESISTOR | 1k | 1/16W |
| R33 | NRSA63J-101X | M.G.RESISTOR | 100 | 1/16W |
| R34 | NRSA63J-101X | M.G.RESISTOR | 100 | 1/16W |
| R35 | NRSA63J-101X | M.G.RESISTOR | 100 | 1/16W |
| R36 | NRSA63J-101X | M.G.RESISTOR | 100 | 1/16W |
| R37 | NRSA63J-101X | M.G.RESISTOR | 100 | 1/16W |
| R38 | NRSA63J-101X | M.G.RESISTOR | 100 | 1/16W |
| R39 | NRSA63J-101X | M.G.RESISTOR | 100 | 1/16W |
| R40 | NRSA63J-101X | M.G.RESISTOR | 100 | 1/16W |
| R41 | NRSA63J-101X | M.G.RESISTOR | 100 | 1/16W |
| R42 | NRSA63J-0R0X | M.G.RESISTOR | 0 | 1/16W |
| R43 | NRSA63J-0R0X | M.G.RESISTOR | 0 | 1/16W |
| R46 | NRSA63J-102X | M.G.RESISTOR | 1k | 1/16W |

[REC/ITI]

| Symbol No. | Part No. | Part Name | Description | |
|---|---|---|---|---|
| R47 | NRSA63J-102X | M.G.RESISTOR | 1k | 1/16W |
| R50 | NRSA63J-102X | M.G.RESISTOR | 1k | 1/16W |
| R51 | NRSA63J-102X | M.G.RESISTOR | 1k | 1/16W |
| R52 | NRSA63J-102X | M.G.RESISTOR | 1k | 1/16W |
| R53 | NRSA63J-102X | M.G.RESISTOR | 1k | 1/16W |
| R54 | NRSA63J-102X | M.G.RESISTOR | 1k | 1/16W |
| R55 | NRSA63J-102X | M.G.RESISTOR | 1k | 1/16W |
| R56 | NRSA63J-102X | M.G.RESISTOR | 1k | 1/16W |
| R57 | NRSA63J-104X | M.G.RESISTOR | 100k | 1/16W |
| R58 | NRSA63J-104X | M.G.RESISTOR | 100k | 1/16W |
| R59 | NRSA63J-104X | M.G.RESISTOR | 100k | 1/16W |
| R60 | NRSA63J-104X | M.G.RESISTOR | 100k | 1/16W |
| R61 | NRSA63J-334X | M.G.RESISTOR | 330k | 1/16W |
| R62 | NRSA63J-104X | M.G.RESISTOR | 100k | 1/16W |
| R63 | NRSA63J-104X | M.G.RESISTOR | 100k | 1/16W |
| R64 | NRSA63J-104X | M.G.RESISTOR | 100k | 1/16W |
| R65 | NRSA63J-104X | M.G.RESISTOR | 100k | 1/16W |
| R66 | NRSA63J-102X | M.G.RESISTOR | 1k | 1/16W |
| R67 | NRSA63J-102X | M.G.RESISTOR | 1k | 1/16W |
| R68 | NRSA63J-101X | M.G.RESISTOR | 100 | 1/16W |
| R69 | NRSA63J-470X | M.G.RESISTOR | 47 | 1/16W |
| R70 | NRSA63J-102X | M.G.RESISTOR | 1k | 1/16W |
| R72 | NRSA63J-470X | M.G.RESISTOR | 47 | 1/16W |
| R73 | NRSA63J-102X | M.G.RESISTOR | 1k | 1/16W |
| R74 | NRSA63J-101X | M.G.RESISTOR | 100 | 1/16W |
| R75 | NRSA63J-271X | M.G.RESISTOR | 270 | 1/16W |
| R76 | NRSA63J-472X | M.G.RESISTOR | 4.7k | 1/16W |
| R77 | NRSA63J-101X | M.G.RESISTOR | 100 | 1/16W |
| R79 | NRSA63J-512X | M.G.RESISTOR | 5.1k | 1/16W |
| R80 | NRSA63J-512X | M.G.RESISTOR | 5.1k | 1/16W |
| R81 | NRSA63J-272X | M.G.RESISTOR | 2.7k | 1/16W |
| R82 | NRSA63J-103X | M.G.RESISTOR | 10k | 1/16W |
| R83 | NRSA63J-822X | M.G.RESISTOR | 8.2k | 1/16W |
| R84 | NRSA63J-102X | M.G.RESISTOR | 1k | 1/16W |
| R85 | NRSA63J-102X | M.G.RESISTOR | 1k | 1/16W |
| R86 | NRSA63J-101X | M.G.RESISTOR | 100 | 1/16W |
| R87 | NRSA63J-470X | M.G.RESISTOR | 47 | 1/16W |
| R88 | NRSA63J-102X | M.G.RESISTOR | 1k | 1/16W |
| R90 | NRSA63J-470X | M.G.RESISTOR | 47 | 1/16W |
| R91 | NRSA63J-102X | M.G.RESISTOR | 1k | 1/16W |
| R92 | NRSA63J-101X | M.G.RESISTOR | 100 | 1/16W |
| R93 | NRSA63J-271X | M.G.RESISTOR | 270 | 1/16W |
| R94 | NRSA63J-472X | M.G.RESISTOR | 4.7k | 1/16W |
| R95 | NRSA63J-101X | M.G.RESISTOR | 100 | 1/16W |
| R97 | NRSA63J-512X | M.G.RESISTOR | 5.1k | 1/16W |
| R98 | NRSA63J-512X | M.G.RESISTOR | 5.1k | 1/16W |
| R99 | NRSA63J-272X | M.G.RESISTOR | 2.7k | 1/16W |
| R100 | NRSA63J-103X | M.G.RESISTOR | 10k | 1/16W |
| R101 | NRSA63J-822X | M.G.RESISTOR | 8.2k | 1/16W |
| R102 | NRSA63J-102X | M.G.RESISTOR | 1k | 1/16W |
| R103 | NRSA63J-102X | M.G.RESISTOR | 1k | 1/16W |
| R104 | NRSA63J-101X | M.G.RESISTOR | 100 | 1/16W |
| R105 | NRSA63J-470X | M.G.RESISTOR | 47 | 1/16W |
| R106 | NRSA63J-102X | M.G.RESISTOR | 1k | 1/16W |
| R108 | NRSA63J-470X | M.G.RESISTOR | 47 | 1/16W |
| R109 | NRSA63J-102X | M.G.RESISTOR | 1k | 1/16W |
| R110 | NRSA63J-101X | M.G.RESISTOR | 100 | 1/16W |
| R111 | NRSA63J-271X | M.G.RESISTOR | 270 | 1/16W |
| R112 | NRSA63J-472X | M.G.RESISTOR | 4.7k | 1/16W |

| Symbol Nc. | Part Ne. | Part Name | Dscription | |
|---|---|---|---|---|
| R113 | NRSA63J-101X | M.G.RESISTOR | 100 | 1/16W |
| R115 | NRSA63J-512X | M.G.RESISTOR | 5.1k | 1/16W |
| R116 | NRSA63J-512X | M.G.RESISTOR | 5.1k | 1/16W |
| R117 | NRSA63J-272X | M.G.RESISTOR | 2.7k | 1/16W |
| R118 | NRSA63J-103X | M.G.RESISTOR | 10k | 1/16W |
| R119 | NRSA63J-822X | M.G.RESISTOR | 8.2k | 1/16W |
| R120 | NRSA63J-102X | M.G.RESISTOR | 1k | 1/16W |
| R121 | NRSA63J-102X | M.G.RESISTOR | 1k | 1/16W |
| R122 | NRSA63J-101X | M.G.RESISTOR | 100 | 1/16W |
| R123 | NRSA63J-470X | M.G.RESISTOR | 47 | 1/16W |
| R124 | NRSA63J-102X | M.G.RESISTOR | 1k | 1/16W |
| R126 | NRSA63J-470X | M.G.RESISTOR | 47 | 1/16W |
| R127 | NRSA63J-102X | M.G.RESISTOR | 1k | 1/16W |
| R128 | NRSA63J-101X | M.G.RESISTOR | 100 | 1/16W |
| R129 | NRSA63J-271X | M.G.RESISTOR | 270 | 1/16W |
| R130 | NRSA63J-472X | M.G.RESISTOR | 4.7k | 1/16W |
| R131 | NRSA63J-101X | M.G.RESISTOR | 100 | 1/16W |
| R133 | NRSA63J-512X | M.G.RESISTOR | 5.1k | 1/16W |
| R134 | NRSA63J-512X | M.G.RESISTOR | 5.1k | 1/16W |
| R135 | NRSA63J-272X | M.G.RESISTOR | 2.7k | 1/16W |
| R136 | NRSA63J-103X | M.G.RESISTOR | 10k | 1/16W |
| R137 | NRSA63J-822X | M.G.RESISTOR | 8.2k | 1/16W |
| R138 | NRSA63J-103X | M.G.RESISTOR | 10k | 1/16W |
| R139 | NRSA63J-272X | M.G.RESISTOR | 2.7k | 1/16W |
| R140 | NRSA63J-102X | M.G.RESISTOR | 1k | 1/16W |
| R141 | NRSA63J-103X | M.G.RESISTOR | 10k | 1/16W |
| R142 | NRSA63J-272X | M.G.RESISTOR | 2.7k | 1/16W |
| R143 | NRSA63J-102X | M.G.RESISTOR | 1k | 1/16W |
| R144 | NRSA63J-101X | M.G.RESISTOR | 100 | 1/16W |
| R145 | NRSA63J-561X | M.G.RESISTOR | 560 | 1/16W |
| R146 | NRSA63J-471X | M.G.RESISTOR | 470 | 1/16W |
| R147 | NRSA63J-103X | M.G.RESISTOR | 10k | 1/16W |
| R148 | NRSA63J-471X | M.G.RESISTOR | 470 | 1/16W |
| R149 | NRSA63J-471X | M.G.RESISTOR | 470 | 1/16W |
| R150 | NRSA63J-560X | M.G.RESISTOR | 56 | 1/16W |
| R151 | NRSA63J-182X | M.G.RESISTOR | 1.8k | 1/16W |
| R152 | NRSA63J-182X | M.G.RESISTOR | 1.8k | 1/16W |
| R153 | NRSA63J-0R0X | M.G.RESISTOR | 0 | 1/16W |
| R154 | NRSA63J-103X | M.G.RESISTOR | 10k | 1/16W |
| R155 | NRSA63J-103X | M.G.RESISTOR | 10k | 1/16W |
| R156 | NRSA63J-0R0X | M.G.RESISTOR | 0 | 1/16W |
| R157 | NRSA63J-103X | M.G.RESISTOR | 10k | 1/16W |
| R158 | NRSA63J-103X | M.G.RESISTOR | 10k | 1/16W |
| R159 | NRSA63J-3R9X | M.G.RESISTOR | 3.9 | 1/16W |
| R160 | NRSA63J-3R9X | M.G.RESISTOR | 3.9 | 1/16W |
| R161 | NRSA63J-472X | M.G.RESISTOR | 4.7k | 1/16W |
| R162 | NRSA63J-103X | M.G.RESISTOR | 10k | 1/16W |
| R163 | NRSA63J-121X | M.G.RESISTOR | 120 | 1/16W |
| R164 | NRSA63J-103X | M.G.RESISTOR | 10k | 1/16W |
| R165 | NRSA63J-472X | M.G.RESISTOR | 4.7k | 1/16W |
| R166 | NRSA63J-103X | M.G.RESISTOR | 10k | 1/16W |
| R167 | NRSA63J-103X | M.G.RESISTOR | 10k | 1/16W |
| R168 | NRSA63J-101X | M.G.RESISTOR | 100 | 1/16W |
| R170 | NRSA63J-472X | M.G.RESISTOR | 4.7k | 1/16W |
| R171 | NRSA63J-103X | M.G.RESISTOR | 10k | 1/16W |
| R172 | NRSA63J-121X | M.G.RESISTOR | 120 | 1/16W |
| R173 | NRSA63J-472X | M.G.RESISTOR | 4.7k | 1/16W |
| R174 | NRSA63J-103X | M.G.RESISTOR | 10k | 1/16W |
| R175 | NRSA63J-103X | M.G.RESISTOR | 10k | 1/16W |

| Symbol No. | Part No. | Part Name | Description | |
|---|---|---|---|---|
| R176 | NRSA63J-103X | M.G.RESISTOR | 10k | 1/16W |
| R177 | NRSA63J-101X | M.G.RESISTOR | 100 | 1/16W |
| R179 | NRSA63J-472X | M.G.RESISTOR | 4.7k | 1/16W |
| R180 | NRSA63J-103X | M.G.RESISTOR | 10k | 1/16W |
| R181 | NRSA63J-121X | M.G.RESISTOR | 120 | 1/16W |
| R182 | NRSA63J-472X | M.G.RESISTOR | 4.7k | 1/16W |
| R183 | NRSA63J-103X | M.G.RESISTOR | 10k | 1/16W |
| R1B4 | NRSA63J-103X | M.G.RESISTOR | 10k | 1/16W |
| R185 | NRSA63J-103X | M.G.RESISTOR | 10k | 1/16W |
| R186 | NRSA63J-101X | M.G.RESISTOR | 100 | 1/16W |
| R18B | NRSA63J-472X | M.G.RESISTOR | 4.7k | 1/16W |
| R189 | NRSA63J-103X | M.G.RESISTOR | 10k | 1/16W |
| R190 | NRSA63J-121X | M.G.RESISTOR | 120 | 1/16W |
| R191 | NRSA63J-472X | M.G.RESISTOR | 4.7k | 1/16W |
| R192 | NRSA63J-103X | M.G.RESISTOR | 10k | 1/16W |
| R193 | NRSA63J-103X | M.G.RESISTOR | 10k | 1/16W |
| R194 | NRSA63J-103X | M.G.RESISTOR | 10k | 1/16W |
| R195 | NRSA63J-101X | M.G.RESISTOR | 100 | 1/16W |
| R201 | NRSA63J-333X | M.G.RESISTOR | 33k | 1/16W |
| R202 | NRSA63J-183X | M.G.RESISTOR | 18k | 1/16W |
| R203 | NRSA63J-471X | M.G.RESISTOR | 470 | 1/16W |
| R204 | NRSA63J-331X | M.G.RESISTOR | 330 | 1/16W |
| R205 | NRSA63J-102X | M.G.RESISTOR | 1k | 1/16W |
| R206 | NRSA63J-0R0X | M.G.RESISTOR | 0 | 1/16W |
| R210 | NRSA63J-0R0X | M.G.RESISTOR | 0 | 1/16W |
| R211 | NRSA63J-0R0X | M.G.RESISTOR | 0 | 1/16W |
| R213 | NRSA63J-0R0X | M.G.RESISTOR | 0 | 1/16W |
| R214 | NRSA63J-104X | M.G.RESISTOR | 100k | 1/16W |
| R215 | NRSA63J-224X | M.G.RESISTOR | 220k | 1/16W |
| R216 | NRSA63J-103X | M.G.RESISTOR | 10k | 1/16W |
| R217 | NRSA63J-104X | M.G.RESISTOR | 100k | 1/16W |
| R218 | NRSA63J-224X | M.G.RESISTOR | 220k | 1/16W |
| R219 | NRSA63J-103X | M.G.RESISTOR | 10k | 1/16W |
| R220 | NRSA63J-101X | M.G.RESISTOR | 100 | 1/16W |
| R221 | NRSA63J-101X | M.G.RESISTOR | 100 | 1/16W |
| R222 | NRSA63J-104X | M.G.RESISTOR | 100k | 1/16W |
| R223 | NRSA63J-0R0X | M.G.RESISTOR | 0 | 1/16W |
| R224 | NRSA63J-0R0X | M.G.RESISTOR | 0 | 1/16W |
| VR1 | NVP1416-103X | TRIM.RESISTOR | NOT USED | |
| VR2 | NVP1416-103X | TRIM.RESISTOR | NOT USED | |
| VR3 | NVP1416-103X | TRIM.RESISTOR | NOT USED | |
| VR4 | NVP1416-103X | TRIM.RESISTOR | NOT USED | |
| VR8 | NVP1416-202X | TRIM.RESISTOR | NOT USED | |
| C1 | NCF31CZ-104X | CER.CAPACITOR | 0.1 | 16V |
| C2 | NEH91CM-476X | E.CAPACITOR | 47 | 16V |
| C3 | NCF31CZ-104X | CER.CAPACITOR | 0.1 | 16V |
| C4 | NCB31HK-103X | CER.CAPACITOR | 0.01 | 50V |
| C5 | NCB31HK-103X | CER.CAPACITOR | 0.01 | 50V |
| C6 | NCB31HK-103X | CER.CAPACITOR | 0.01 | 50V |
| C7 | NCB31HK-103X | CER.CAPACITOR | 0.01 | 50V |
| C10 | NCB31HK-103X | CER.CAPACITOR | 0.01 | 50V |
| C11 | NCB31HK-103X | CER.CAPACITOR | 0.01 | 50V |
| C12 | NCB31HK-103X | CER.CAPACITOR | 0.01 | 50V |
| C13 | NCB31HK-103X | CER.CAPACITOR | 0.01 | 50V |
| C17 | NCF31CZ-104X | CER.CAPACITOR | 0.1 | 16V |
| C18 | NEH91CM-476X | E.CAPACITOR | 47 | 16V |
| C19 | NCF31CZ-104X | CER.CAPACITOR | 0.1 | 16V |

| Symbol No. | Part No. | Part Name | Description | |
|---|---|---|---|---|
| C23 | NCB31HK-103X | CER.CAPACITOR | 0.01 | 50V |
| C24 | NCB31HK-103X | CER.CAPACITOR | 0.01 | 50V |
| C25 | NCB31HK-103X | CER.CAPACITOR | 0.01 | 50V |
| C26 | NCB31HK-103X | CER.CAPACITOR | 0.01 | 50V |
| C27 | NCF31CZ-104X | CER.CAPACITOR | 0.1 | 16V |
| C28 | NEH91CM-476X | E.CAPACITOR | 47 | 16V |
| C29 | NCF31CZ-104X | CER.CAPACITOR | 0.1 | 16V |
| C33 | NCB31HK-103X | CER.CAPACITOR | 0.01 | 50V |
| C35 | NCB31HK-103X | CER.CAPACITOR | 0.01 | 50V |
| C38 | NCF31CZ-104X | CER.CAPACITOR | 0.1 | 16V |
| C40 | NCB31HK-103X | CER.CAPACITOR | 0.01 | 50V |
| C41 | NCF31CZ-104X | CER.CAPACITOR | 0.1 | 16V |
| C42 | NEH91CM-476X | E.CAPACITOR | 47 | 16V |
| C43 | NCF31CZ-104X | CER.CAPACITOR | 0.1 | 16V |
| C44 | NCB31HK-103X | CER.CAPACITOR | 0.01 | 50V |
| C45 | NCF31CZ-104X | CER.CAPACITOR | 0.1 | 16V |
| C46 | NEH91CM-476X | E.CAPACITOR | 47 | 16V |
| C47 | NCF31CZ-104X | CER.CAPACITOR | 0.1 | 16V |
| C48 | NCF31CZ-104X | CER.CAPACITOR | 0.1 | 16V |
| C49 | NEH91CM-476X | E.CAPACITOR | 47 | 16V |
| C50 | NCF31CZ-104X | CER.CAPACITOR | 0.1 | 16V |
| C51 | NCF31CZ-104X | CER.CAPACITOR | 0.1 | 16V |
| C52 | NCB31HK-103X | CER.CAPACITOR | 0.01 | 50V |
| C53 | NCS31HJ-101X | CER.CAPACITOR | 100P | 50V |
| C54 | NCS31HJ-101X | CER.CAPACITOR | 100P | 50V |
| C56 | NCB31HK-102X | CER.CAPACITOR | 1000P | 50V |
| C57 | NCS31HJ-151X | CER.CAPACITOR | 150P | 50V |
| C5B | NCF31CZ-104X | CER.CAPACITOR | 0.1 | 16V |
| C59 | NEH91CM-476X | E.CAPACITOR | 47 | 16V |
| C60 | NCF31CZ-104X | CER.CAPACITOR | 0.1 | 16V |
| C61 | NCF31CZ-104X | CER.CAPACITOR | 0.1 | 16V |
| C62 | NEH91CM-476X | E.CAPACITOR | 47 | 16V |
| C63 | NCF31CZ-104X | CER.CAPACITOR | 0.1 | 16V |
| C64 | NCB31HK-103X | CER.CAPACITOR | 0.01 | 50V |
| C65 | NEH91CM-476X | E.CAPACITOR | 47 | 16V |
| C66 | NCB31HK-103X | CER.CAPACITOR | 0.01 | 50V |
| C67 | NCF31CZ-104X | CER.CAPACITOR | 0.1 | 16V |
| C68 | NCF31CZ-104X | CER.CAPACITOR | 0.1 | 16V |
| C69 | NCB31HK-103X | CER.CAPACITOR | 0.01 | 50V |
| C70 | NCS31HJ-101X | CER.CAPACITOR | 100P | 50V |
| C71 | NCS31HJ-101X | CER.CAPACITOR | 100P | 50V |
| C73 | NCB31HK-102X | CER.CAPACITOR | 1000P | 50V |
| C74 | NCS31HJ-151X | CER.CAPACITOR | 150P | 50V |
| C75 | NCF31CZ-104X | CER.CAPACITOR | 0.1 | 16V |
| C77 | NCF31CZ-104X | CER.CAPACITOR | 0.1 | 16V |
| C78 | NCF31CZ-104X | CER.CAPACITOR | 0.1 | 16V |
| C79 | NEH91CM-476X | E.CAPACITOR | 47 | 16V |
| C80 | NCF31CZ-104X | CER.CAPACITOR | 0.1 | 16V |
| C81 | NCF31CZ-104X | CER.CAPACITOR | 0.1 | 16V |
| C82 | NCB31HK-103X | CER.CAPACITOR | 0.01 | 50V |
| C83 | NCS31HJ-101X | CER.CAPACITOR | 100P | 50V |
| C84 | NCS31HJ-101X | CER.CAPACITOR | 100P | 50V |
| C86 | NCB31HK-102X | CER.CAPACITOR | 1000P | 50V |
| C87 | NCS31HJ-151X | CER.CAPACITOR | 150P | 50V |
| C88 | NCF31CZ-104X | CER.CAPACITOR | 0.1 | 16V |
| CB9 | NEH91CM-476X | E.CAPACITOR | 47 | 16V |
| C90 | NCF31CZ-104X | CER.CAPACITOR | 0.1 | 16V |
| C91 | NCF31CZ-104X | CER.CAPACITOR | 0.1 | 16V |
| C92 | NCB31HK-103X | CER.CAPACITOR | 0.01 | 50V |

[REC/ITI]

| Symbol No. | Part No. | Part Name | Description | |
|---|---|---|---|---|
| C93 | NCS31HJ-101X | CER.CAPACITOR | 100P | 50V |
| C94 | NCS31HJ-101X | CER.CAPACITOR | 100P | 50V |
| C96 | NCB31HK-102X | CER.CAPACITOR | 1000P | 50V |
| C100 | NCS31HJ-151X | CER.CAPACITOR | 150P | 50V |
| C101 | NCF31CZ-104X | CER.CAPACITOR | 0.1 | 16V |
| C103 | NCF31CZ-104X | CER.CAPACITOR | 0.1 | 16V |
| C104 | NCF31CZ-104X | CER.CAPACITOR | 0.1 | 16V |
| C105 | NCS31HJ-101X | CER.CAPACITOR | 100P | 50V |
| C106 | NCS31HJ-101X | CER.CAPACITOR | 100P | 50V |
| C107 | NCF31CZ-104X | CER.CAPACITOR | 0.1 | 16V |
| C108 | NBE71AM-476X | TAN.CAPACITOR | 47 | 10V |
| C109 | NCF31CZ-104X | CER.CAPACITOR | 0.1 | 16V |
| C110 | NCF31CZ-104X | CER.CAPACITOR | 0.1 | 16V |
| C111 | NCF31CZ-104X | CER.CAPACITOR | 0.1 | 16V |
| C112 | NCF31CZ-104X | CER.CAPACITOR | 0.1 | 16V |
| C113 | NCS31HJ-101X | CER.CAPACITOR | 100P | 50V |
| C114 | NCF31CZ-104X | CER.CAPACITOR | 0.1 | 16V |
| C115 | NCF31CZ-104X | CER.CAPACITOR | 0.1 | 16V |
| C116 | NBE71AM-476X | TAN.CAPACITOR | 47 | 10V |
| C117 | NCF31CZ-104X | CER.CAPACITOR | 0.1 | 16V |
| C118 | NCF31CZ-104X | CER.CAPACITOR | 0.1 | 16V |
| C119 | NCB31HK-103X | CER.CAPACITOR | 0.01 | 50V |
| C120 | NCS31HJ-270X | CER.CAPACITOR | 27P | 50V |
| C121 | NCS31HJ-270X | CER.CAPACITOR | 27P | 50V |
| C122 | NCS31HJ-101X | CER.CAPACITOR | 100P | 50V |
| C123 | NCS31HJ-101X | CER.CAPACITOR | 100P | 50V |
| C124 | NEH91CM-106X | E.CAPACITOR | 10 | 16V |
| C127 | NEH91CM-106X | E.CAPACITOR | 10 | 16V |
| C128 | NEH91CM-106X | E.CAPACITOR | 10 | 16V |
| C130 | NEH91CM-106X | E.CAPACITOR | 10 | 16V |
| C141 | NBE51CM-106X | TAN.CAPACITOR | 10 | 16V |
| C142 | NCB31HK-102X | CER.CAPACITOR | 1000P | 50V |
| C143 | NCB31HK-102X | CER.CAPACITOR | 1000P | 50V |
| C144 | NCF31CZ-104X | CER.CAPACITOR | 0.1 | 16V |
| C145 | NCF31CZ-104X | CER.CAPACITOR | 0.1 | 16V |
| C146 | NCB31HK-102X | CER.CAPACITOR | 1000P | 50V |
| C147 | NCB31HK-102X | CER.CAPACITOR | 1000P | 50V |
| C148 | NCF31CZ-104X | CER.CAPACITOR | 0.1 | 16V |
| C149 | NCF31CZ-104X | CER.CAPACITOR | 0.1 | 16V |
| C150 | NCF31CZ-104X | CER.CAPACITOR | 0.1 | 16V |
| C151 | NCF31CZ-104X | CER.CAPACITOR | 0.1 | 16V |
| C152 | NCB31HK-102X | CER.CAPACITOR | 1000P | 50V |
| C153 | NCB31HK-102X | CER.CAPACITOR | 1000P | 50V |
| C154 | NCF31CZ-104X | CER.CAPACITOR | 0.1 | 16V |
| C155 | NCF31CZ-104X | CER.CAPACITOR | 0.1 | 16V |
| C156 | NCB31HK-102X | CER.CAPACITOR | 1000P | 50V |
| C157 | NCB31HK-102X | CER.CAPACITOR | 1000P | 50V |
| C158 | NCB31HK-103X | CER.CAPACITOR | 0.01 | 50V |
| C159 | NCB31HK-102X | CER.CAPACITOR | 1000P | 50V |
| C160 | NCB31HK-103X | CER.CAPACITOR | 0.01 | 50V |
| C161 | NCB31HK-103X | CER.CAPACITOR | 0.01 | 50V |
| C162 | NDC31HJ-120X | CER.CAPACITOR | 12P | 50V |
| C163 | NDC31HJ-120X | CER.CAPACITOR | 12P | 50V |
| C164 | NCB31HK-103X | CER.CAPACITOR | 0.01 | 50V |
| L1 | NOL024J-101X | COIL | 100μH | |
| CN1 | PU56258-14 | CONNECTOR | 14PIN | |

| Symbol No. | Part No. | Part Nams | Description |
|---|---|---|---|
| CN2 | PGZ02149-103Z | CONNECTOR | 3PIN |
| CN3 | PGZ02149-110Z | CONNECTOR | 10PIN |
| CN4 | PGZ02149-106Z | CONNECTOR | 6PIN |
| CN5 | PGZ02149-109Z | CONNECTOR | 9PIN |
| CN6 | PGZ02149-107Z | CONNECTOR | 7PIN |
| TP9 | SSV1096-001 | TEST POINT | |
| TP10 | SSV1096-001 | TEST POINT | |
| TP11 | SSV1096-001 | TEST POINT | |
| TP12 | SSV1096-001 | TEST POINT | |
| TP13 | SSV1096-001 | TEST POINT | |
| TP14 | SSV1096-001 | TEST POINT | |
| TP15 | SSV1096-001 | TEST POINT | |
| TP19 | SSV1096-001 | TEST POINT | |
| TP20 | SSV1096-001 | TEST POINT | |
| TP21 | SSV1096-001 | TEST POINT | |
| TP22 | SSV1096-001 | TEST POINT | |
| TP23 | SSV1096-001 | TEST POINT | |
| K1 | PGZ00627Z | FERRITE BEADS | |
| K2 | PGZ00627Z | FERRITE BEADS | |
| K3 | PGZ00627Z | FERRITE BEADS | |
| K4 | PGZ00627Z | FERRITE BEADS | |
| K5 | PGZ00627Z | FERRITE BEADS | |
| K7 | PGZ00627Z | FERRITE BEADS | |
| K8 | PGZ00627Z | FERRITE BEADS | |
| K9 | PGZ00627Z | FERRITE BEADS | |
| K10 | PGZ00627Z | FERRITE BEADS | |
| K11 | PGZ00627Z | FERRITE BEADS | |
| K13 | PGZ00627Z | FERRITE BEADS | |
| K14 | PGZ00627Z | FERRITE BEADS | |
| K15 | PGZ00627Z | FERRITE BEADS | |
| K17 | PGZ00627Z | FERRITE BEADS | |
| K18 | PGZ00627Z | FERRITE BEADS | |
| K19 | PGZ00627Z | FERRITE BEADS | |
| T1 | PGZ02197-Z | TRANSFORMER | |
| T2 | PGZ02197-Z | TRANSFORMER | |
| T3 | PGZ02197-Z | TRANSFORMER | |
| T4 | PGZ02197-Z | TRANSFORMER | |
| SD1 | PRD447B7 | ITI SHIELD | |

## 6.4 RF PRDCESS1 BDARD ASSEMSLY LIST [1][2]

### SLK1035-A3A [1][2]□□□□□□□

The symbol ** refers to the ROM vereion. Place yeur purchese order filling the number indicated en the IC in **.

| Symbol No. | Part No. | Part Nama | Dascription |
|---|---|---|---|
| IC1 | TC4053BF-X | I.C.(M) | TOSHIBA |
| IC2 | SSI32F8001 | I.C.(M) | TDK |
| IC3 | CLC520AJE-X | I.C.(M) | COMLINEAR |
| IC4 | CLC401AJE-X | I.C.(M) | COMLINEAR |
| IC5 | LM360M-X | I.C.(M) | NS |
| IC6 | UPC4074G2-X | I.C.(M) | NEC |
| IC7 | NJM7805FA | I.C.(M) | JRC |
| IC8 | NJM79M05FA | I.C.(M) | JRC |
| IC9 | BR24C01AF-W | I.C.(M) | ROHM |
| IC10 | JCL0027 | I.C.(M) | JVC |
| IC11 | DS90C031TM-X | I.C.(M) | NS |
| IC12 | TC74VHCT04F-X | I.C.(M) | TOSHIBA |
| IC13 | LM318M-X | I.C.(M) | NS |
| IC14 | MC10H116M-X | I.C.(M) | MOTOROLA |
| IC15 | UPC4074G2-X | I.C.(M) | NEC |
| IC16 | TC4053BF-X | I.C.(M) | TOSHIBA |
| IC17 | UPD78P054GC-3** | I.C.(M) | NEC |
| IC18 | UPC4082G2-X | I.C.(M) | NEC |
| IC19 | TC4053BF-X | I.C.(M) | TOSHIBA |
| IC20 | MC10H125M-X | I.C.(M) | MOTOROLA |
| IC21 | TC74VHC04F-X | I.C.(M) | TOSHIBA |
| IC22 | TC7W04F-X | I.C.(M) | TOSHIBA |
| IC27 | TC4053BF-X | I.C.(M) | TOSHIBA |
| IC28 | UPC4074G2-X | I.C.(M) | NEC |
| IC30 | MC33269DR2-3.3 | I.C.(M) | MOTOROLA |
| IC31 | M62352FP-X | I.C.(M) | MITSUBISHI |
| IC32 | TC74HC0BAF-X | I.C.(M) | TOSHIBA |
| IC33 | MC74HC74AF-X | I.C.(M) | MOTOROLA |
| Q1 | 2SC3735/4-5/-X | TRANSISTOR | NEC |
| Q2 | 2SC3735/4-5/-X | TRANSISTOR | NEC |
| Q3 | 2SC3735/4-5/-X | TRANSISTOR | NEC |
| Q4 | 2SC3735/4-5/-X | TRANSISTOR | NEC |
| Q5 | 2SC3735/4-5/-X | TRANSISTOR | NEC |
| Q6 | 2SC3735/4-5/-X | TRANSISTOR | NEC |
| Q7 | 2SA1462/3-4/-X | TRANSISTOR | NEC |
| Q8 | 2SC3735/4-5/-X | TRANSISTOR | NEC |
| Q9 | 2SC3735/4-5/-X | TRANSISTOR | NEC |
| Q10 | 2SC3735/4-5/-X | TRANSISTOR | NEC |
| Q11 | 2SC3735/4-5/-X | TRANSISTOR | NEC |
| Q12 | 2SA1462/3-4/-X | TRANSISTOR | NEC |
| Q13 | 2SC3735/4-5/-X | TRANSISTOR | NEC |
| Q14 | 2SC3735/4-5/-X | TRANSISTOR | NEC |
| Q15 | 2SC3735/4-5/-X | TRANSISTOR | NEC |
| Q16 | 2SA1462/3-4/-X | TRANSISTOR | NEC |
| Q17 | FA1A4M-X | TRANSISTOR | NEC |
| Q18 | 2SA1462/3-4/-X | TRANSISTOR | NEC |
| O19 | 2SA1462/3-4/-X | TRANSISTQR | NEC |
| Q20 | 2SA1462/3-4/-X | TRANSISTOR | NEC |
| Q21 | 2SC3735/4-5/-X | TRANSISTOR | NEC |
| O22 | 2SC3735/4-5/-X | TRANSISTOR | NEC |
| Q23 | 2SC3735/4-5/-X | TRANSISTOR | NEC |
| Q24 | 2SC3735/4-5/-X | TRANSISTOR | NEC |
| Q25 | 2SA1462/3-4/-X | TRANSISTOR | NEC |
| O26 | 2SA1462/3-4/-X | TRANSISTOR | NEC |
| Q27 | 2SA1462/3-4/-X | TRANSISTOR | NEC |
| Q28 | FA1A4M-X | TRANSISTOR | NEC |
| Q29 | FA1A4M-X | TRANSISTOR | NEC |
| O30 | FA1A4M-X | TRANSISTOR | NEC |

| Symbol No. | Part No. | Part Namo | Description | |
|---|---|---|---|---|
| Q31 | FA1A4M-X | TRANSISTOR | NEC | |
| O32 | 2SA1462/3-4/-X | TRANSISTOR | NEC | |
| Q33 | 2SA1462/3-4/-X | TRANSISTOR | NEC | |
| O34 | 2SC3735/4-5/-X | TRANSISTOR | NEC | |
| Q35 | 2SA1462/3-4/-X | TRANSISTOR | NEC | |
| Q36 | 2SC3735/4-5/-X | TRANSISTOR | NEC | |
| Q37 | 2SA1462/3-4/-X | TRANSISTOR | NEC | |
| Q38 | 2SK1228-X | FET | NEC | |
| O39 | FA1A4M-X | TRANSISTOR | NEC | |
| Q40 | FA1A4M-X | TRANSISTOR | NEC | |
| Q41 | FA1A4M-X | TRANSISTOR | NEC | |
| O42 | FA1A4M-X | TRANSISTOR | NEC | |
| O43 | FA1A4M-X | TRANSISTOR | NEC | |
| Q44 | FA1A4M-X | TRANSISTOR | NEC | |
| Q45 | FA1A4M-X | TRANSISTOR | NEC | |
| O66 | FA1A4M-X | TRANSISTOR | NEC | |
| Q100 | 2SC3735/4-5/-X | TRANSISTOR | NEC | |
| D1 | RB731U-X | DIODE | ROHM | |
| D2 | RB731U-X | DIODE | ROHM | |
| D3 | RB731U-X | DIODE | ROHM | |
| D4 | RB731U-X | DIODE | ROHM | |
| D5 | DAN202K-X | DIODE | ROHM | |
| D6 | RB731U-X | DIODE | ROHM | |
| D7 | DAN202K-X | DIODE | ROHM | |
| LD1 | SLR-55MC3F | LED | ROHM | |
| R1 | NRSA63J-151X | M.G.RESISTOR | 150 | 1/16W |
| R2 | NRSA63J-221X | M.G.RESISTOR | 220 | 1/16W |
| R4 | NRSA63J-820X | M.G.RESISTOR | 82 | 1/16W |
| R5 | NRSA63J-103X | M.G.RESISTOR | 10k | 1/16W |
| R6 | NRSA63J-100X | M.G.RESISTOR | 10 | 1/16W |
| R7 | NRSA63J-223X | M.G.RESISTOR | 22k | 1/16W |
| R8 | NRSA63J-103X | M.G.RESISTOR | 10k | 1/16W |
| R9 | NRSA63J-100X | M.G.RESISTOR | 10 | 1/16W |
| R10 | NRSA63J-223X | M.G.RESISTOR | 22k | 1/16W |
| R11 | NRSA63J-102X | M.G.RESISTOR | 1k | 1/16W |
| R12 | NRSA63J-103X | M.G.RESISTOR | 10k | 1/16W |
| R13 | NRSA63J-560X | M.G.RESISTOR | 56 | 1/16W |
| R14 | NRSA63J-102X | M.G.RESISTOR | 1k | 1/16W |
| R15 | NRSA63J-183X | M.G.RESISTOR | 18k | 1/16W |
| R16 | NRSA63J-103X | M.G.RESISTOR | 10k | 1/16W |
| R17 | NRSA63J-100X | M.G.RESISTOR | 10 | 1/16W |
| R18 | NRSA63J-681X | M.G.RESISTOR | 680 | 1/16W |
| R19 | NRSA63J-471X | M.G.RESISTOR | 470 | 1/16W |
| R20 | NRSA63J-470X | M.G.RESISTOR | 47 | 1/16W |
| R21 | NRSA63J-182X | M.G.RESISTOR | 1.8k | 1/16W |
| R22 | NRSA63J-100X | M.G.RESISTOR | 10 | 1/16W |
| R23 | NRSA63J-102X | M.G.RESISTOR | 1k | 1/16W |
| R24 | NRSA63J-331X | M.G.RESISTOR | 330 | 1/16W |
| R25 | NRSA63J-181X | M.G.RESISTOR | 180 | 1/16W |
| R26 | NRSA63J-151X | M.G.RESISTOR | 150 | 1/16W |
| R27 | NRSA63J-331X | M.G.RESISTOR | 330 | 1/16W |
| R28 | NRSA63J-221X | M.G.RESISTOR | 220 | 1/16W |
| R29 | NRSA63J-100X | M.G.RESISTOR | 10 | 1/16W |
| R30 | NRSA63J-392X | M.G.RESISTOR | 3.9k | 1/16W |

[RF PROCESS1]

| Symboi No. | Part No. | Part Nama | Dascription | |
|---|---|---|---|---|
| R31 | NRSA63J-223X | M.G.RESISTOR | 22k | 1/16W |
| R32 | NRSA63J-392X | M.G.RESISTOR | 3.9k | 1/16W |
| R33 | NRSA63J-223X | M.G.RESISTOR | 22k | 1/16W |
| R34 | NRSA63J-102X | M.G.RESISTOR | 1k | 1/16W |
| R35 | NRSA63J-102X | M.G.RESISTOR | 1k | 1/16W |
| R36 | NRSA63J-102X | M.G.RESISTOR | 1k | 1/16W |
| R37 | NRSA63J-151X | M.G.RESISTOR | 150 | 1/16W |
| R38 | NRSA63J-102X | M.G.RESISTOR | 1k | 1/16W |
| R39 | NRSA63J-102X | M.G.RESISTOR | 1k | 1/16W |
| R40 | NRSA63J-182X | M.G.RESISTOR | 1.8k | 1/16W |
| R41 | NRSA63J-222X | M.G.RESISTOR | 2.2k | 1/16W |
| R42 | NRSA63J-102X | M.G.RESISTOR | 1k | 1/16W |
| R43 | NRSA63J-181X | M.G.RESISTOR | 180 | 1/16W |
| R44 | NRSA63J-101X | M.G.RESISTOR | 100 | 1/16W |
| R45 | NRSA63J-102X | M.G.RESISTOR | 1k | 1/16W |
| R46 | NRSA63J-151X | M.G.RESISTOR | 150 | 1/16W |
| R47 | NRSA63J-151X | M.G.RESISTOR | 150 | 1/16W |
| R48 | NRSA63J-181X | M.G.RESISTOR | 180 | 1/16W |
| R49 | NRSA63J-471X | M.G.RESISTOR | 470 | 1/16W |
| R50 | NRSA63J-181X | M.G.RESISTOR | 180 | 1/16W |
| R51 | NRSA63J-472X | M.G.RESISTOR | 4.7k | 1/16W |
| R52 | NRSA63J-101X | M.G.RESISTOR | 100 | 1/16W |
| R55 | NRSA63J-100X | M.G.RESISTOR | 10 | 1/16W |
| R56 | NRSA63J-221X | M.G.RESISTOR | 220 | 1/16W |
| R57 | NRSA63J-223X | M.G.RESISTOR | 22k | 1/16W |
| R58 | NRSA63J-333X | M.G.RESISTOR | 33k | 1/16W |
| R59 | NRSA63J-561X | M.G.RESISTOR | 560 | 1/16W |
| R60 | NRSA63J-102X | M.G.RESISTOR | 1k | 1/16W |
| R61 | NRSA63J-471X | M.G.RESISTOR | 470 | 1/16W |
| R62 | NRSA63J-560X | M.G.RESISTOR | 56 | 1/16W |
| R63 | NRSA63J-102X | M.G.RESISTOR | 1k | 1/16W |
| R64 | NRSA63J-103X | M.G.RESISTOR | 10k | 1/16W |
| R65 | NRSA63J-222X | M.G.RESISTOR | 2.2k | 1/16W |
| R66 | NRSA63J-103X | M.G.RESISTOR | 10k | 1/16W |
| R67 | NRSA63J-821X | M.G.RESISTOR | 820 | 1/16W |
| R68 | NRSA63J-510X | M.G.RESISTOR | 51 | 1/16W |
| R69 | NRSA63J-152X | M.G.RESISTOR | 1.5k | 1/16W |
| R70 | NRSA63J-222X | M.G.RESISTOR | 2.2k | 1/16W |
| R71 | NRSA63J-221X | M.G.RESISTOR | 220 | 1/16W |
| R72 | NRSA63J-822X | M.G.RESISTOR | 8.2k | 1/16W |
| R73 | NRSA63J-122X | M.G.RESISTOR | 1.2k | 1/16W |
| R74 | NRSA63J-221X | M.G.RESISTOR | 220 | 1/16W |
| R75 | NRSA63J-822X | M.G.RESISTOR | 8.2k | 1/16W |
| R76 | NRSA63J-122X | M.G.RESISTOR | 1.2k | 1/16W |
| R77 | NRSA63J-103X | M.G.RESISTOR | 10k | 1/16W |
| R78 | NRSA63J-100X | M.G.RESISTOR | 10 | 1/16W |
| R79 | NRVA63D-473X | C.M.F.RESISTOR | 47k | 1/16W |
| R80 | NRVA63D-273X | C.M.F.RESISTOR | 27k | 1/16W |
| R81 | NRSA63J-100X | M.G.RESISTOR | 10 | 1/16W |
| R82 | NRVA63D-333X | C.M.F.RESISTOR | 33k | 1/16W |
| R83 | NRVA63D-183X | C.M.F.RESISTOR | 18k | 1/16W |
| R84 | NRSA63J-223X | M.G.RESISTOR | 22k | 1/16W |
| R85 | NRSA63J-393X | M.G.RESISTOR | 39k | 1/16W |
| R86 | NRSA63J-392X | M.G.RESISTOR | 3.9k | 1/16W |
| R87 | NRSA63J-152X | M.G.RESISTOR | 1.5k | 1/16W |
| R88 | NRSA63J-152X | M.G.RESISTOR | 1.5k | 1/16W |
| R89 | NRSA63J-122X | M.G.RESISTOR | 1.2k | 1/16W |
| R90 | NRSA63J-471X | M.G.RESISTOR | 470 | 1/16W |
| R91 | NRSA63J-331X | M.G.RESISTOR | 330 | 1/16W |
| R92 | NRSA63J-561X | M.G.RESISTOR | 560 | 1/16W |

| Symboi No. | Part No. | Part Nams | Dscription | |
|---|---|---|---|---|
| R93 | NRSA63J-392X | M.G.RESISTOR | 3.9k | 1/16W |
| R94 | NRSA63J-100X | M.G.RESISTOR | 10 | 1/16W |
| R95 | NRSA63J-182X | M.G.RESISTOR | 1.8k | 1/16W |
| R96 | NRSA63J-471X | M.G.RESISTOR | 470 | 1/16W |
| R97 | NRSA63J-100X | M.G.RESISTOR | 10 | 1/16W |
| R98 | NRSA63J-103X | M.G.RESISTOR | 10k | 1/16W |
| R99 | NRSA63J-183X | M.G.RESISTOR | 18k | 1/16W |
| R100 | NRSA63J-470X | M.G.RESISTOR | 47 | 1/16W |
| R101 | NRSA63J-100X | M.G.RESISTOR | 10 | 1/16W |
| R102 | NRSA63J-471X | M.G.RESISTOR | 470 | 1/16W |
| R103 | NRSA63J-822X | M.G.RESISTOR | 8.2k | 1/16W |
| R104 | NRSA63J-152X | M.G.RESISTOR | 1.5k | 1/16W |
| R105 | NRSA63J-103X | M.G.RESISTOR | 10k | 1/16W |
| R106 | NRSA63J-103X | M.G.RESISTOR | 10k | 1/16W |
| R107 | NRSA63J-104X | M.G.RESISTOR | 100k | 1/16W |
| R108 | NRSA63J-510X | M.G.RESISTOR | 51 | 1/16W |
| R109 | NRSA63J-470X | M.G.RESISTOR | 47 | 1/16W |
| R110 | NRSA63J-103X | M.G.RESISTOR | 10k | 1/16W |
| R111 | NRSA63J-103X | M.G.RESISTOR | 10k | 1/16W |
| R112 | NRSA63J-102X | M.G.RESISTOR | 1k | 1/16W |
| R113 | NRSA63J-220X | M.G.RESISTOR | 22 | 1/16W |
| R114 | NRSA63J-100X | M.G.RESISTOR | 10 | 1/16W |
| R115 | NRSA63J-100X | M.G.RESISTOR | 10 | 1/16W |
| R116 | NRSA63J-102X | M.G.RESISTOR | 1k | 1/16W |
| R117 | NRSA63J-102X | M.G.RESISTOR | 1k | 1/16W |
| R119 | NRSA63J-100X | M.G.RESISTOR | 10 | 1/16W |
| R121 | NRSA63J-100X | M.G.RESISTOR | 10 | 1/16W |
| R123 | NRSA63J-100X | M.G.RESISTOR | 10 | 1/16W |
| R124 | NRSA63J-102X | M.G.RESISTOR | 1k | 1/16W |
| R125 | NRSA63J-100X | M.G.RESISTOR | 10 | 1/16W |
| R126 | NRSA63J-102X | M.G.RESISTOR | 1k | 1/16W |
| R127 | NRSA63J-100X | M.G.RESISTOR | 10 | 1/16W |
| R128 | NRSA63J-102X | M.G.RESISTOR | 1k | 1/16W |
| R129 | NRSA63J-100X | M.G.RESISTOR | 10 | 1/16W |
| R131 | NRSA63J-100X | M.G.RESISTOR | 10 | 1/16W |
| R133 | NRSA63J-100X | M.G.RESISTOR | 10 | 1/16W |
| R134 | NRSA63J-102X | M.G.RESISTOR | 1k | 1/16W |
| R135 | NRSA63J-100X | M.G.RESISTOR | 10 | 1/16W |
| R136 | NRSA63J-100X | M.G.RESISTOR | 10 | 1/16W |
| R137 | NRSA63J-333X | M.G.RESISTOR | 33k | 1/16W |
| R138 | NRSA63J-102X | M.G.RESISTOR | 1k | 1/16W |
| R139 | NRSA63J-471X | M.G.RESISTOR | 470 | 1/16W |
| R140 | NRSA63J-222X | M.G.RESISTOR | 2.2k | 1/16W |
| R141 | NRSA63J-222X | M.G.RESISTOR | 2.2k | 1/16W |
| R142 | NRSA63J-222X | M.G.RESISTOR | 2.2k | 1/16W |
| R143 | NRSA63J-222X | M.G.RESISTOR | 2.2k | 1/16W |
| R144 | NRSA63J-103X | M.G.RESISTOR | 10k | 1/16W |
| R145 | NRSA63J-103X | M.G.RESISTOR | 10k | 1/16W |
| R146 | NRSA63J-103X | M.G.RESISTOR | 10k | 1/16W |
| R147 | NRSA63J-102X | M.G.RESISTOR | 1k | 1/16W |
| R148 | NRSA63J-102X | M.G.RESISTOR | 1k | 1/16W |
| R149 | NRSA63J-102X | M.G.RESISTOR | 1k | 1/16W |
| R150 | NRSA63J-102X | M.G.RESISTOR | 1k | 1/16W |
| R151 | NRSA63J-102X | M.G.RESISTOR | 1k | 1/16W |
| R152 | NRSA63J-102X | M.G.RESISTOR | 1k | 1/16W |
| R153 | NRSA63J-102X | M.G.RESISTOR | 1k | 1/16W |
| R154 | NRSA63J-102X | M.G.RESISTOR | 1k | 1/16W |
| R155 | NRSA63J-473X | M.G.RESISTOR | 47k | 1/16W |
| R156 | NRSA63J-102X | M.G.RESISTOR | 1k | 1/16W |
| R157 | NRSA63J-102X | M.G.RESISTOR | 1k | 1/16W |

| Symboi No. | Part No. | Part Nama | Dascription | |
|---|---|---|---|---|
| R158 | NRSA63J-102X | M.G.RESISTOR | 1k | 1/16W |
| R159 | NRSA63J-102X | M.G.RESISTOR | 1k | 1/16W |
| R160 | NRSA63J-102X | M.G.RESISTOR | 1k | 1/16W |
| R161 | NRSA63J-102X | M.G.RESISTOR | 1k | 1/16W |
| R162 | NRSA63J-102X | M.G.RESISTOR | 1k | 1/16W |
| R163 | NRSA63J-102X | M.G.RESISTOR | 1k | 1/16W |
| R164 | NRSA63J-102X | M.G.RESISTOR | 1k | 1/16W |
| R165 | NRSA63J-102X | M.G.RESISTOR | 1k | 1/16W |
| R166 | NRSA63J-102X | M.G.RESISTOR | 1k | 1/16W |
| R167 | NRSA63J-102X | M.G.RESISTOR | 1k | 1/16W |
| R168 | NRSA63J-0R0X | M.G.RESISTOR | 0 | 1/16W |
| R169 | NRSA63J-0R0X | M.G.RESISTOR | 0 | 1/16W |
| R170 | NRSA63J-101X | M.G.RESISTOR | 100 | 1/16W |
| R171 | NRSA63J-102X | M.G.RESISTOR | 1k | 1/16W |
| R172 | NRSA63J-222X | M.G.RESISTOR | 2.2k | 1/16W |
| R173 | NRSA63J-222X | M.G.RESISTOR | 2.2k | 1/16W |
| R174 | NRSA63J-102X | M.G.RESISTOR | 1k | 1/16W |
| R175 | NRSA63J-222X | M.G.RESISTOR | 2.2k | 1/16W |
| R176 | NRSA63J-222X | M.G.RESISTOR | 2.2k | 1/16W |
| R177 | NRSA63J-222X | M.G.RESISTOR | 2.2k | 1/16W |
| R178 | NRSA63J-222X | M.G.RESISTOR | 2.2k | 1/16W |
| R179 | NRSA63J-222X | M.G.RESISTOR | 2.2k | 1/16W |
| R180 | NRSA63J-222X | M.G.RESISTOR | 2.2k | 1/16W |
| R181 | NRSA63J-222X | M.G.RESISTOR | 2.2k | 1/16W |
| R182 | NRSA63J-222X | M.G.RESISTOR | 2.2k | 1/16W |
| R183 | NRSA63J-510X | M.G.RESISTOR | 51 | 1/16W |
| R184 | NRSA63J-510X | M.G.RESISTOR | 51 | 1/16W |
| R185 | NRSA63J-222X | M.G.RESISTOR | 2.2k | 1/16W |
| R186 | NRSA63J-100X | M.G.RESISTOR | 10 | 1/16W |
| R187 | NRSA02J-180X | M.G.RESISTOR | 18 | 1/10W |
| R188 | NRSA63J-102X | M.G.RESISTOR | 1k | 1/16W |
| R191 | NRSA63J-102X | M.G.RESISTOR | 1k | 1/16W |
| R192 | NRSA63J-471X | M.G.RESISTOR | 470 | 1/16W |
| R193 | NRSA63J-0R0X | M.G.RESISTOR | 0 | 1/16W |
| R194 | NRSA63J-0R0X | M.G.RESISTOR | 0 | 1/16W |
| R195 | NRSA63J-102X | M.G.RESISTOR | 1k | 1/16W |
| R196 | NRSA63J-102X | M.G.RESISTOR | 1k | 1/16W |
| R197 | NRSA63J-101X | M.G.RESISTOR | 100 | 1/16W |
| R198 | NRSA63J-101X | M.G.RESISTOR | 100 | 1/16W |
| R200 | NRSA63J-101X | M.G.RESISTOR | 100 | 1/16W |
| R201 | NRSA63J-153X | M.G.RESISTOR | 15k | 1/16W |
| R202 | NRSA63J-820X | M.G.RESISTOR | 82 | 1/16W |
| R203 | NRSA63F-2101X | M.G.RESISTOR | 2.10k | 1/16W |
| R204 | NRSA63J-330X | M.G.RESISTOR | 33 | 1/16W |
| R205 | NRVA63D-202X | C.M.F.RESISTOR | 2k | 1/16W |
| R206 | NRSA63J-103X | M.G.RESISTOR | 10k | 1/16W |
| R207 | NRSA63J-823X | M.G.RESISTOR | 82k | 1/16W |
| R208 | NRSA63J-153X | M.G.RESISTOR | 15k | 1/16W |
| R209 | NRSA63J-391X | M.G.RESISTOR | 390 | 1/16W |
| R210 | NRSA63J-822X | M.G.RESISTOR | 8.2k | 1/16W |
| R211 | NRSA63J-152X | M.G.RESISTOR | 1.5k | 1/16W |
| R212 | NRSA63J-152X | M.G.RESISTOR | 1.5k | 1/16W |
| R213 | NRSA63J-471X | M.G.RESISTOR | 470 | 1/16W |
| R214 | NRSA63J-471X | M.G.RESISTOR | 470 | 1/16W |
| R215 | NRSA63J-181X | M.G.RESISTOR | 180 | 1/16W |
| R216 | NRSA63J-390X | M.G.RESISTOR | 39 | 1/16W |
| R217 | NRSA63J-471X | M.G.RESISTOR | 470 | 1/16W |
| R218 | NRSA63J-471X | M.G.RESISTOR | 470 | 1/16W |
| R219 | NRSA63J-471X | M.G.RESISTOR | 470 | 1/16W |
| R220 | NRSA63J-471X | M.G.RESISTOR | 470 | 1/16W |

| Symboi No. | Part No. | Part Nsms | Description | |
|---|---|---|---|---|
| R221 | NRSA63J-471X | M.G.RESISTOR | 470 | 1/16W |
| R222 | NRSA63J-471X | M.G.RESISTOR | 470 | 1/16W |
| R223 | NRSA63J-101X | M.G.RESISTOR | 100 | 1/16W |
| R224 | NRSA63J-100X | M.G.RESISTOR | 10 | 1/16W |
| R225 | NRSA63J-100X | M.G.RESISTOR | 10 | 1/16W |
| R226 | NRSA63J-332X | M.G.RESISTOR | 3.3k | 1/16W |
| R227 | NRSA63J-392X | M.G.RESISTOR | 3.9k | 1/16W |
| R228 | NRSA63J-392X | M.G.RESISTOR | 3.9k | 1/16W |
| R229 | NRSA63J-0R0X | M.G.RESISTOR | 0 | 1/16W |
| R230 | NRSA63J-102X | M.G.RESISTOR | 1k | 1/16W |
| R231 | NRSA63J-104X | M.G.RESISTOR | 100k | 1/16W |
| R232 | NRSA63J-103X | M.G.RESISTOR | 10k | 1/16W |
| R233 | NRSA63J-222X | M.G.RESISTOR | 2.2k | 1/16W |
| R234 | NRSA63J-223X | M.G.RESISTOR | 22k | 1/16W |
| R235 | NRSA63J-102X | M.G.RESISTOR | 1k | 1/16W |
| R236 | NRSA63J-0R0X | M.G.RESISTOR | 0 | 1/16W |
| R237 | NRSA63J-123X | M.G.RESISTOR | 12k | 1/16W |
| R238 | NRSA63J-472X | M.G.RESISTOR | 4.7k | 1/16W |
| R239 | NRSA63J-102X | M.G.RESISTOR | 1k | 1/16W |
| R240 | NRSA63J-101X | M.G.RESISTOR | 100 | 1/16W |
| R241 | NRSA63J-101X | M.G.RESISTOR | 100 | 1/16W |
| R242 | NRSA63J-101X | M.G.RESISTOR | 100 | 1/16W |
| R243 | NRSA63J-102X | M.G.RESISTOR | 1k | 1/16W |
| R244 | NRSA63J-101X | M.G.RESISTOR | 100 | 1/16W |
| R245 | NRSA63J-102X | M.G.RESISTOR | 1k | 1/16W |
| R246 | NRSA63J-102X | M.G.RESISTOR | 1k | 1/16W |
| R248 | NRSA63J-101X | M.G.RESISTOR | 100 | 1/16W |
| R249 | NRSA63J-102X | M.G.RESISTOR | 1k | 1/16W |
| R250 | NRSA63J-0R0X | M.G.RESISTOR | 0 | 1/16W |
| R251 | NRSA63J-101X | M.G.RESISTOR | 100 | 1/16W |
| R252 | NRSA63J-102X | M.G.RESISTOR | 1k | 1/16W |
| R253 | NRSA63J-101X | M.G.RESISTOR | 100 | 1/16W |
| R254 | NRSA63J-471X | M.G.RESISTOR | 470 | 1/16W |
| R255 | NRSA63J-101X | M.G.RESISTOR | 100 | 1/16W |
| R256 | NRSA63J-101X | M.G.RESISTOR | 100 | 1/16W |
| R257 | NRSA63J-102X | M.G.RESISTOR | 1k | 1/16W |
| R258 | NRSA63J-101X | M.G.RESISTOR | 100 | 1/16W |
| R259 | NRSA63J-471X | M.G.RESISTOR | 470 | 1/16W |
| R260 | NRSA63J-101X | M.G.RESISTOR | 100 | 1/16W |
| R261 | NRSA63J-101X | M.G.RESISTOR | 100 | 1/16W |
| R262 | NRSA63J-221X | M.G.RESISTOR | 220 | 1/16W |
| R263 | NRSA63J-221X | M.G.RESISTOR | 220 | 1/16W |
| R265 | NRSA63J-0R0X | M.G.RESISTOR | 0 | 1/16W |
| R267 | NRSA63J-0R0X | M.G.RESISTOR | 0 | 1/16W |
| R268 | NRSA63J-102X | M.G.RESISTOR | 1k | 1/16W |
| R269 | NRSA63J-333X | M.G.RESISTOR | 33k | 1/16W |
| R270 | NRSA63J-101X | M.G.RESISTOR | 100 | 1/16W |
| R271 | NRSA63J-332X | M.G.RESISTOR | 3.3k | 1/16W |
| R272 | NRSA63J-101X | M.G.RESISTOR | 100 | 1/16W |
| R273 | NRSA63J-103X | M.G.RESISTOR | 10k | 1/16W |
| R274 | NRSA63J-103X | M.G.RESISTOR | 10k | 1/16W |
| R275 | NRSA63J-102X | M.G.RESISTOR | 1k | 1/16W |
| R277 | NRSA63J-101X | M.G.RESISTOR | 100 | 1/16W |
| R278 | NRSA63J-0R0X | M.G.RESISTOR | 0 | 1/16W |
| R279 | NRSA63J-0R0X | M.G.RESISTOR | 0 | 1/16W |
| R280 | NRSA63J-0R0X | M.G.RESISTOR | 0 | 1/16W |
| R282 | NRSA63J-473X | M.G.RESISTOR | 47k | 1/16W |
| R283 | NRSA63J-473X | M.G.RESISTOR | 47k | 1/16W |
| R284 | NRSA63J-103X | M.G.RESISTOR | 10k | 1/16W |
| R285 | NRSA63J-103X | M.G.RESISTOR | 10k | 1/16W |

[RF PROCESS1]

| Symbol No. | Part No. | Part Name | Description | |
|---|---|---|---|---|
| R286 | NRSA63J-103X | M.G.RESISTOR | 10k | 1/16W |
| R287 | NRSA63J-222X | M.G.RESISTOR | 2.2k | 1/16W |
| R288 | NRSA63J-103X | M.G.RESISTOR | 10k | 1/16W |
| R289 | NRSA63J-151X | M.G.RESISTOR | 150 | 1/16W |
| R290 | NRSA63J-103X | M.G.RESISTOR | 10k | 1/16W |
| R291 | NRSA63J-223X | M.G.RESISTOR | 22k | 1/16W |
| R292 | NRSA63J-151X | M.G.RESISTOR | 150 | 1/16W |
| R293 | NRSA63J-151X | M.G.RESISTOR | 150 | 1/16W |
| R294 | NRSA63J-101X | M.G.RESISTOR | 100 | 1/16W |
| R295 | NRSA63J-103X | M.G.RESISTOR | 10k | 1/16W |
| R296 | NRSA63J-103X | M.G.RESISTOR | 10k | 1/16W |
| R297 | NRSA63J-103X | M.G.RESISTOR | 10k | 1/16W |
| R299 | NRSA63J-103X | M.G.RESISTOR | 10k | 1/16W |
| R300 | NRSA63J-103X | M.G.RESISTOR | 10k | 1/16W |
| R301 | NRSA63J-101X | M.G.RESISTOR | 100 | 1/16W |
| R302 | NRSA63J-103X | M.G.RESISTOR | 10k | 1/16W |
| R304 | NRSA63J-470X | M.G.RESISTOR | 47 | 1/16W |
| R305 | NRSA63J-101X | M.G.RESISTOR | 100 | 1/16W |
| R306 | NRSA63J-101X | M.G.RESISTOR | 100 | 1/16W |
| R307 | NRSA63J-224X | M.G.RESISTOR | 220k | 1/16W |
| R308 | NRSA63J-224X | M.G.RESISTOR | 220k | 1/16W |
| R309 | NRSA63J-102X | M.G.RESISTOR | 1k | 1/16W |
| R310 | NRSA63J-102X | M.G.RESISTOR | 1k | 1/16W |
| R314 | NRSA63J-102X | M.G.RESISTOR | 1k | 1/16W |
| R315 | NRSA63J-101X | M.G.RESISTOR | 100 | 1/16W |
| R316 | NRSA63J-392X | M.G.RESISTOR | 3.9k | 1/16W |
| R317 | NRSA63J-104X | M.G.RESISTOR | 100k | 1/16W |
| R410 | NRSA63J-0R0X | M.G.RESISTOR | 0 | 1/16W |
| R414 | NRSA63J-0R0X | M.G.RESISTOR | 0 | 1/16W |
| R424 | NRSA63J-102X | M.G.RESISTOR | 1k | 1/16W |
| R426 | NRSA63J-102X | M.G.RESISTOR | 1k | 1/16W |
| R427 | NRSA63J-0R0X | M.G.RESISTOR | 0 | 1/16W |
| R428 | NRSA63J-272X | M.G.RESISTOR | 2.7k | 1/16W |
| R500 | NRSA63J-102X | M.G.RESISTOR | 1k | 1/16W |
| R501 | NRSA63J-102X | M.G.RESISTOR | 1k | 1/16W |
| R510 | NRSA63J-561X | M.G.RESISTOR | 560 | 1/16W |
| R511 | NRSA63J-182X | M.G.RESISTOR | 1.8k | 1/16W |
| R512 | NRSA63J-473X | M.G.RESISTOR | 47k | 1/16W |
| R513 | NRSA63J-473X | M.G.RESISTOR | 47k | 1/16W |
| R514 | NRSA63J-0R0X | M.G.RESISTOR | 0 | 1/16W |
| R515 | NRSA63J-104X | M.G.RESISTOR | 100k | 1/16W |
| R516 | NRSA63J-0R0X | M.G.RESISTOR | 0 | 1/16W |
| R517 | NRSA63J-0R0X | M.G.RESISTOR | 0 | 1/16W |
| R518 | NRSA63J-222X | M.G.RESISTOR | 2.2k | 1/16W |
| VR1 | NVP1416-201X | TRIM.RESISTOR | 200 | CH BAL |
| VR2 | NVP1416-501X | TRIM.RESISTOR | 500 | FIL LEV |
| VR3 | NVP1416-202X | TRIM.RESISTOR | 2k | FREQ |
| VR4 | NVP1416-202X | TRIM.RESISTOR | 2k | FREQ |
| VR6 | NVP1415-101X | TRIM.RESISTOR | 100 | 1+D |
| VR7 | NVP1416-102X | TRIM.RESISTOR | 1k | ERR RATE |
| VR8 | NVP1416-102X | TRIM.RESISTOR | 1k | ERR RATE |
| VR9 | NVP1415-202X | TRIM.RESISTOR | 2k | SL LEV |
| VR10 | NVP1416-201X | TRIM.RESISTOR | 200 | PLL |
| VR11 | NVP1415-101X | TRIM.RESISTOR | 100 | ERR RATE |
| C1 | NCF31CZ-104X | CER.CAPACITOR | 0.1 | 16V |
| C2 | NCF31CZ-104X | CER.CAPACITOR | 0.1 | 16V |
| C3 | NEH91CM-226X | E.CAPACITOR | 22 | 16V |

| Symbol No. | Part No. | Part Name | Description | |
|---|---|---|---|---|
| C4 | NCB31HK-103X | CER.CAPACITOR | 0.01 | 50V |
| C5 | NCB31HK-103X | CER.CAPACITOR | 0.01 | 50V |
| C6 | NCF31CZ-104X | CER.CAPACITOR | 0.1 | 16V |
| C7 | NCF31CZ-104X | CER.CAPACITOR | 0.1 | 16V |
| C8 | NCB31HK-103X | CER.CAPACITOR | 0.01 | 50V |
| C9 | NCB31HK-103X | CER.CAPACITOR | 0.01 | 50V |
| C10 | NCB31HK-103X | CER.CAPACITOR | 0.01 | 50V |
| C11 | NEH91CM-106X | E.CAPACITOR | 10 | 16V |
| C12 | NDC31HJ-100X | CER.CAPACITOR | 10P | 50V |
| C13 | NCF31CZ-104X | CER.CAPACITOR | 0.1 | 16V |
| C14 | NCB31HK-103X | CER.CAPACITOR | 0.01 | 50V |
| C15 | NCF31CZ-104X | CER.CAPACITOR | 0.1 | 16V |
| C16 | NCF31CZ-104X | CER.CAPACITOR | 0.1 | 16V |
| C17 | NCF31CZ-104X | CER.CAPACITOR | 0.1 | 16V |
| C18 | NDC31HJ-560X | CER.CAPACITOR | 56P | 50V |
| C19 | NCF31CZ-104X | CER.CAPACITOR | 0.1 | 16V |
| C20 | NCB31HK-103X | CER.CAPACITOR | 0.01 | 50V |
| C21 | NCB31HK-103X | CER.CAPACITOR | 0.01 | 50V |
| C22 | NEH91CM-226X | E.CAPACITOR | 22 | 16V |
| C23 | NCF31CZ-104X | CER.CAPACITOR | 0.1 | 16V |
| C24 | NCB31HK-222X | CER.CAPACITOR | 2200P | 50V |
| C25 | NCF31CZ-104X | CER.CAPACITOR | 0.1 | 16V |
| C26 | NCB31HK-103X | CER.CAPACITOR | 0.01 | 50V |
| C27 | NCB31HK-103X | CER.CAPACITOR | 0.01 | 50V |
| C28 | NCF31CZ-104X | CER.CAPACITOR | 0.1 | 16V |
| C29 | NCB31HK-103X | CER.CAPACITOR | 0.01 | 50V |
| C30 | NCB31HK-103X | CER.CAPACITOR | 0.01 | 50V |
| C31 | NEH91CM-226X | E.CAPACITOR | 22 | 16V |
| C32 | NCF31CZ-104X | CER.CAPACITOR | 0.1 | 16V |
| C33 | NCB31HK-103X | CER.CAPACITOR | 0.01 | 50V |
| C34 | NCB31HK-103X | CER.CAPACITOR | 0.01 | 50V |
| C35 | NEH91CM-226X | E.CAPACITOR | 22 | 16V |
| C36 | NCB31HK-102X | CER.CAPACITOR | 1000P | 50V |
| C37 | NDC31HJ-331X | CER.CAPACITOR | 330P | 50V |
| C38 | NCF31CZ-104X | CER.CAPACITOR | 0.1 | 16V |
| C39 | NCF31CZ-104X | CER.CAPACITOR | 0.1 | 16V |
| C40 | NCF31CZ-104X | CER.CAPACITOR | 0.1 | 16V |
| C41 | NCF31CZ-104X | CER.CAPACITOR | 0.1 | 16V |
| C42 | NCB31HK-102X | CER.CAPACITOR | 1000P | 50V |
| C43 | NCB31HK-103X | CER.CAPACITOR | 0.01 | 50V |
| C44 | NCB31HK-103X | CER.CAPACITOR | 0.01 | 50V |
| C45 | NEH91CM-226X | E.CAPACITOR | 22 | 16V |
| C46 | NCB31HK-103X | CER.CAPACITOR | 0.01 | 50V |
| C47 | NEH91CM-226X | E.CAPACITOR | 22 | 16V |
| C48 | NCB31HK-103X | CER.CAPACITOR | 0.01 | 50V |
| C49 | NCB31HK-103X | CER.CAPACITOR | 0.01 | 50V |
| C50 | NEH91CM-106X | E.CAPACITOR | 10 | 16V |
| C51 | NDC31HJ-101X | CER.CAPACITOR | 100P | 50V |
| C52 | NCB31HK-102X | CER.CAPACITOR | 1000P | 50V |
| C53 | NDC31HJ-101X | CER.CAPACITOR | 100P | 50V |
| C54 | NCB31HK-103X | CER.CAPACITOR | 0.01 | 50V |
| C55 | NCB31HK-102X | CER.CAPACITOR | 1000P | 50V |
| C56 | NCF31CZ-104X | CER.CAPACITOR | 0.1 | 16V |
| C57 | NDC31HJ-561X | CER.CAPACITOR | 560P | 50V |
| C58 | NCB31HK-103X | CER.CAPACITOR | 0.01 | 50V |
| C59 | NEH91HM-105X | E.CAPACITOR | 1 | 50V |
| C60 | NCB31HK-103X | CER.CAPACITOR | 0.01 | 50V |
| C61 | NCB31HK-103X | CER.CAPACITOR | 0.01 | 50V |
| C62 | NCB31HK-103X | CER.CAPACITOR | 0.01 | 50V |

| Symboi No. | Part No. | Part Namo | Dasoriptlon | |
|---|---|---|---|---|
| C63 | NCB31HK-102X | CER.CAPACITOR | 1000P | 50V |
| C64 | NCF31CZ-104X | CER.CAPACITOR | 0.1 | 16V |
| C65 | NCF31CZ-104X | CER.CAPACITOR | 0.1 | 16V |
| C66 | NCF31CZ-104X | CER.CAPACITOR | 0.1 | 16V |
| C67 | NEH91CM-226X | E.CAPACITOR | 22 | 16V |
| C68 | NCB31HK-103X | CER.CAPACITOR | 0.01 | 50V |
| C69 | NEH91CM-226X | E.CAPACITOR | 22 | 16V |
| C70 | NCB31HK-103X | CER.CAPACITOR | 0.01 | 50V |
| C71 | NEH91CM-226X | E.CAPACITOR | 22 | 16V |
| C72 | NCB31HK-103X | CER.CAPACITOR | 0.01 | 50V |
| C73 | NCB31HK-103X | CER.CAPACITOR | 0.01 | 50V |
| C74 | NEH90JM-476X | E.CAPACITOR | 47 | 6.3V |
| C75 | NCB31HK-103X | CER.CAPACITOR | 0.01 | 50V |
| C76 | NCF31CZ-104X | CER.CAPACITOR | 0.1 | 16V |
| C77 | NCF31CZ-104X | CER.CAPACITOR | 0.1 | 16V |
| C78 | NCB31HK-103X | CER.CAPACITOR | 0.01 | 50V |
| C79 | NEH91CM-106X | E.CAPACITOR | 10 | 16V |
| C80 | NEH91CM-226X | E.CAPACITOR | 22 | 16V |
| C81 | NCB31HK-103X | CER.CAPACITOR | 0.01 | 50V |
| C82 | NCB31HK-103X | CER.CAPACITOR | 0.01 | 50V |
| C83 | NEH91CM-106X | E.CAPACITOR | 10 | 16V |
| C84 | NEH91CM-226X | E.CAPACITOR | 22 | 16V |
| C85 | NCB31HK-103X | CER.CAPACITOR | 0.01 | 50V |
| C86 | NCB31HK-103X | CER.CAPACITOR | 0.01 | 50V |
| C87 | NCB31HK-103X | CER.CAPACITOR | 0.01 | 50V |
| C88 | NCB31HK-103X | CER.CAPACITOR | 0.01 | 50V |
| C89 | NCB31HK-103X | CER.CAPACITOR | 0.01 | 50V |
| C90 | NCB31HK-103X | CER.CAPACITOR | 0.01 | 50V |
| C91 | NCB31HK-103X | CER.CAPACITOR | 0.01 | 50V |
| C92 | NDC31HJ-100X | CER.CAPACITOR | 10P | 50V |
| C93 | NCB31HK-103X | CER.CAPACITOR | 0.01 | 50V |
| C94 | NCB31HK-103X | CER.CAPACITOR | 0.01 | 50V |
| C95 | NEH91CM-226X | E.CAPACITOR | 22 | 16V |
| C96 | NCB31HK-103X | CER.CAPACITOR | 0.01 | 50V |
| C97 | NCB31HK-103X | CER.CAPACITOR | 0.01 | 50V |
| C98 | NEH90JM-476X | E.CAPACITOR | 47 | 6.3V |
| C99 | NCB31HK-103X | CER.CAPACITOR | 0.01 | 50V |
| C100 | NEH91CM-106X | E.CAPACITOR | 10 | 16V |
| C101 | NEH90JM-476X | E.CAPACITOR | 47 | 6.3V |
| C102 | NCB31HK-103X | CER.CAPACITOR | 0.01 | 50V |
| C103 | NCB31HK-103X | CER.CAPACITOR | 0.01 | 50V |
| C104 | NCF31CZ-104X | CER.CAPACITOR | 0.1 | 16V |
| C105 | NDC31HJ-100X | CER.CAPACITOR | 10P | 50V |
| C106 | NDC31HJ-100X | CER.CAPACITOR | 10P | 50V |
| C107 | NCB31HK-103X | CER.CAPACITOR | 0.01 | 50V |
| C10B | NEH91CM-226X | E.CAPACITOR | 22 | 16V |
| C109 | NDC31HJ-101X | CER.CAPACITOR | 100P | 50V |
| C110 | NEH90JM-107X | E.CAPACITOR | 100 | 6.3V |
| C111 | NEH90JM-107X | E.CAPACITOR | 100 | 6.3V |
| C112 | NCF31CZ-104X | CER.CAPACITOR | 0.1 | 16V |
| C113 | NCB31HK-103X | CER.CAPACITOR | 0.01 | 50V |
| C114 | NCB31HK-103X | CER.CAPACITOR | 0.01 | 50V |
| C115 | NCF31CZ-104X | CER.CAPACITOR | 0.1 | 16V |
| C116 | NCF31CZ-104X | CER.CAPACITOR | 0.1 | 16V |
| C117 | NCB31HK-103X | CER.CAPACITOR | 0.01 | 50V |
| C118 | NCB31HK-103X | CER.CAPACITOR | 0.01 | 50V |
| C119 | NCF31CZ-104X | CER.CAPACITOR | 0.1 | 16V |
| C120 | NCB31HK-103X | CER.CAPACITOR | 0.01 | 50V |
| C121 | NEH91CM-226X | E.CAPACITOR | 22 | 16V |

| Symboi No. | Part No. | Part Namo | Desoription | |
|---|---|---|---|---|
| C122 | NCB31HK-103X | CER.CAPACITOR | 0.01 | 50V |
| C123 | NEH91CM-226X | E.CAPACITOR | 22 | 16V |
| C124 | NCB31HK-103X | CER.CAPACITOR | 0.01 | 50V |
| C125 | NDC31HJ-220X | CER.CAPACITOR | 22P | 50V |
| C126 | NDC31HJ-220X | CER.CAPACITOR | 22P | 50V |
| C127 | NCF31CZ-104X | CER.CAPACITOR | 0.1 | 16V |
| C128 | NCB31HK-103X | CER.CAPACITOR | 0.01 | 50V |
| C129 | NCB31HK-103X | CER.CAPACITOR | 0.01 | 50V |
| C130 | NEH91CM-106X | E.CAPACITOR | 10 | 16V |
| C131 | NDC31HJ-101X | CER.CAPACITOR | 100P | 50V |
| C132 | NDC31HJ-101X | CER.CAPACITOR | 100P | 50V |
| C133 | NDC31HJ-101X | CER.CAPACITOR | 100P | 50V |
| C134 | NDC31HJ-101X | CER.CAPACITOR | 100P | 50V |
| C135 | NDC31HJ-101X | CER.CAPACITOR | 100P | 50V |
| C136 | NCB31HK-102X | CER.CAPACITOR | 1000P | 50V |
| C137 | NCB31HK-103X | CER.CAPACITOR | 0.01 | 50V |
| C138 | NCB31HK-102X | CER.CAPACITOR | 1000P | 50V |
| C139 | NCB31HK-103X | CER.CAPACITOR | 0.01 | 50V |
| C140 | NEH91CM-226X | E.CAPACITOR | 22 | 16V |
| C141 | NCB31HK-103X | CER.CAPACITOR | 0.01 | 50V |
| C142 | NCB31HK-103X | CER.CAPACITOR | 0.01 | 50V |
| C143 | NCB31HK-103X | CER.CAPACITOR | 0.01 | 50V |
| C144 | NCB31HK-103X | CER.CAPACITOR | 0.01 | 50V |
| C145 | NCB31HK-103X | CER.CAPACITOR | 0.01 | 50V |
| C146 | NCB31HK-103X | CER.CAPACITOR | 0.01 | 50V |
| C147 | NCB31HK-103X | CER.CAPACITOR | 0.01 | 50V |
| C148 | NCB31HK-103X | CER.CAPACITOR | 0.01 | 50V |
| C149 | NCB31HK-103X | CER.CAPACITOR | 0.01 | 50V |
| C150 | NEH90JM-107X | E.CAPACITOR | 100 | 6.3V |
| C151 | NEH90JM-107X | E.CAPACITOR | 100 | 6.3V |
| C152 | NEH91HM-105X | E.CAPACITOR | 1 | 50V |
| C153 | NBE21EM-474X | TAN.CAPACITOR | 0.47 | 25V |
| C154 | NCB31HK-103X | CER.CAPACITOR | 0.01 | 50V |
| C155 | NCB31HK-103X | CER.CAPACITOR | 0.01 | 50V |
| C156 | NCB31HK-103X | CER.CAPACITOR | 0.01 | 50V |
| C157 | NCB31HK-103X | CER.CAPACITOR | 0.01 | 50V |
| C158 | NDC31HJ-330X | CER.CAPACITOR | 33P | 50V |
| C159 | NCF31CZ-104X | CER.CAPACITOR | 0.1 | 16V |
| C160 | NCF31CZ-104X | CER.CAPACITOR | 0.1 | 16V |
| C161 | NCB31HK-103X | CER.CAPACITOR | 0.01 | 50V |
| C162 | NCB31HK-103X | CER.CAPACITOR | 0.01 | 50V |
| C163 | NCB31HK-103X | CER.CAPACITOR | 0.01 | 50V |
| C164 | NCB31HK-103X | CER.CAPACITOR | 0.01 | 50V |
| C165 | NCB31HK-103X | CER.CAPACITOR | 0.01 | 50V |
| C166 | NCB31HK-103X | CER.CAPACITOR | 0.01 | 50V |
| C167 | NCB31HK-103X | CER.CAPACITOR | 0.01 | 50V |
| C16B | NCB31HK-103X | CER.CAPACITOR | 0.01 | 50V |
| C169 | NDC31HJ-101X | CER.CAPACITOR | 100P | 50V |
| C170 | NDC31HJ-101X | CER.CAPACITOR | 100P | 50V |
| C171 | NEH91EM-475X | E.CAPACITOR | 4.7 | 25V |
| C179 | NCB31HK-103X | CER.CAPACITOR | 0.01 | 50V |
| C200 | NDC31HJ-101X | CER.CAPACITOR | 100P | 50V |
| C201 | NCB31HK-103X | CER.CAPACITOR | 0.01 | 50V |
| C202 | NCB31HK-103X | CER.CAPACITOR | 0.01 | 50V |
| C203 | NCB31HK-103X | CER.CAPACITOR | 0.01 | 50V |
| C204 | NCB31HK-103X | CER.CAPACITOR | 0.01 | 50V |
| C205 | NCF31CZ-104X | CER.CAPACITOR | 0.1 | 16V |
| C206 | NCF31CZ-104X | CER.CAPACITOR | 0.1 | 16V |
| C225 | NCF31CZ-104X | CER.CAPACITOR | 0.1 | 16V |

[RF PROCESS1]

| Symbol No. | Part No. | Part Name | Description |
|---|---|---|---|
| C227 | NCB31HK-103X | CER.CAPACITOR | 0.01 50V |
| C230 | NCB31HK-102X | CER.CAPACITOR | 1000P 50V |
| C250 | NDC31HJ-221X | CER.CAPACITOR | 220P 50V |
| C256 | NCB31HK-103X | CER.CAPACITOR | 0.01 50V |
| VC1 | NAT3112-200RZ | TRIM.CAPACITOR | 20P 1+D |
| L1 | NQL024J-100X | COIL | 10μH |
| L2 | NQL024J-1R0X | COIL | 1μH |
| L3 | NQL024J-R47X | COIL | 0.47μH |
| X1 | PGZ02200-001 | CRYSTAL | 4.9152MHz |
| CN1 | PGZ02149-102Z | CONNECTOR | 2PIN |
| CN2 | PGZ02142-100 | CONNECTOR | 100PIN |
| CN5 | PGZ02149-106Z | CONNECTOR | 6PIN |
| TP1 | SCV1880-001 | TEST POINT | |
| TP2 | SCV1880-001 | TEST POINT | |
| TP3 | SCV1880-001 | TEST POINT | |
| TP4 | SCV1880-001 | TEST POINT | |
| TP5 | SCV18B0-001 | TEST POINT | |
| TP6 | SCV1880-001 | TEST POINT | |
| TP7 | SCV1880-001 | TEST POINT | |
| TP8 | SCV1880-001 | TEST POINT | |
| TP9 | SCV1880-001 | TEST POINT | |
| TP10 | SCV18B0-001 | TEST POINT | |
| TP11 | SCV1880-001 | TEST POINT | |
| TP12 | SCV1B80-001 | TEST POINT | |
| TP13 | SCV1B80-001 | TEST POINT | |
| TP14 | SCV18B0-001 | TEST POINT | |
| TP15 | SCV1880-001 | TEST POINT | |
| TP16 | SCV1880-001 | TEST POINT | |
| TP17 | SCV1880-001 | TEST POINT | |
| TP18 | SCV1880-001 | TEST POINT | |
| TP19 | SCV1880-001 | TEST POINT | |
| TP22 | SCV1880-001 | TEST POINT | |
| TP23 | SCV1880-001 | TEST POINT | |
| TP24 | SCV1880-001 | TEST POINT | |
| TP26 | SCV1880-001 | TEST POINT | |
| TP28 | SCV1880-001 | TEST POINT | |
| TP29 | SCV1B80-001 | TEST POINT | |
| TP30 | SCV1880-001 | TEST POINT | |
| TP31 | SCV1880-001 | TEST POINT | |
| TP32 | SCV1880-001 | TEST POINT | |
| TP33 | SCV1880-001 | TEST POINT | |
| TP34 | SCV18B0-001 | TEST POINT | |
| TP35 | SCV1880-001 | TEST POINT | |
| TP36 | SCV1880-001 | TEST POINT | |
| TP37 | SCV1880-001 | TEST POINT | |
| TP38 | SCV1880-001 | TEST POINT | |
| TP39 | SCV1880-001 | TEST POINT | |
| TP40 | SCV1880-001 | TEST POINT | |
| TP41 | SCV1880-001 | TEST POINT | |
| TP42 | SCV1880-001 | TEST POINT | |
| TP45 | SCV1880-001 | TEST POINT | |
| TP46 | SCV1880-001 | TEST POINT | |

| Symbol No. | Part No. | Part Name | Description |
|---|---|---|---|
| TP47 | SCV1880-001 | TEST POINT | |
| TP49 | SCV1880-001 | TEST POINT | |
| TP52 | SCV1880-001 | TEST POINT | |
| TP53 | SCV1880-001 | TEST POINT | |
| FL1 | PGZ02179-W | FL FILTER | 18nS DELAY |
| FL2 | PGZ02180-W | FL FILTER | 21nS DELAY |
| FL3 | PGZ02199 | FL FILTER | 1MHz LPF |
| K1 | PGZ00627Z | FERRITE BEADS | |
| K2 | PGZ00627Z | FERRITE BEADS | |
| K3 | PGZ00627Z | FERRITE BEADS | |
| K4 | PGZ00627Z | FERRITE BEADS | |
| K5 | PGZ00627Z | FERRITE BEADS | |
| K6 | PGZ00627Z | FERRITE BEADS | |
| K7 | PGZ00627Z | FERRITE BEADS | |
| K8 | PGZ00627Z | FERRITE BEADS | |
| K9 | PGZ00627Z | FERRITE BEADS | |
| K10 | PGZ00627Z | FERRITE BEADS | |
| K11 | PGZ00627Z | FERRITE BEADS | |
| K12 | PGZ00627Z | FERRITE BEADS | |
| K13 | PGZ00627Z | FERRITE BEADS | |
| K14 | PGZ00627Z | FERRITE BEADS | |
| K15 | PGZ00627Z | FERRITE BEADS | |
| K16 | PGZ00627Z | FERRITE BEADS | |
| K17 | PGZ00627Z | FERRITE BEADS | |
| K18 | PGZ00627Z | FERRITE BEADS | |
| K19 | PGZ00627Z | FERRITE BEADS | |
| K20 | PGZ00627Z | FERRITE BEADS | |
| K21 | PGZ00627Z | FERRITE BEADS | |
| K22 | PGZ00627Z | FERRITE BEADS | |
| K23 | PGZ00627Z | FERRITE BEADS | |
| K24 | PGZ00627Z | FERRITE BEADS | |
| K25 | PGZ00627Z | FERRITE BEADS | |
| K28 | PGZ00627Z | FERRITE BEADS | |
| K29 | PGZ00627Z | FERRITE BEADS | |
| K30 | PGZ00627Z | FERRITE BEADS | |
| K32 | PGZ00627Z | FERRITE BEADS | |
| LF1 | PGZ02201 | FILTER | |
| T1 | PGZ02198-02Z | COIL | |
| TB1 | PGZ02228 | EARTH LUG | |
| T82 | PGZ02228 | EARTH LUG | |
| TB3 | PGZ02228 | EARTH LUG | |
| T84 | PGZ02228 | EARTH LUG | |

## B.5 PV PROCESS BDARD ASSEMBLY LIST [1][3]

**SLK1021-A0A (BR-DB5E/DS0E)**

**SLK1021-B5A (BR-D50E)** [1][3]□□□□□□□

The symbel ** refers to the ROM versien. Place yeur purchase order filling the numbsr indlcated cn the IC in **.

| Symbol No. | Psrt No. | Psrt Nsms | Dsecription | |
|---|---|---|---|---|
| IC1 | DS90C032TM-X | I.C.(M) | NS | (D85E/D80E) |
| IC2 | DS90C032TM-X | I.C.(M) | NS | (D85E/D80E) |
| IC3 | JCL0028 | I.C.(M) | JVC | (D85E/D80E) |
| IC4 | UPD489001 | I.C.(M) | NEC | (D85E/D80E) |
| IC5 | UPD489001 | I.C.(M) | NEC | (D85E/D80E) |
| IC6 | UPD489001 | I.C.(M) | NEC | (D85E/D80E) |
| IC7 | UPD489001 | I.C.(M) | NEC | (D85E/D80E) |
| IC8 | S-81224PG-PX-X | I.C.(M) | SEIKO | (D85E/D80E) |
| IC9 | MN67371F | I.C.(M) | MATSUSHITA | (D85E/D80E) |
| IC10 | S-81224PG-PX-X | I.C.(M) | SEIKO | (D85E/D80E) |
| IC11 | MN67371F | I.C.(M) | MATSUSHITA | (D85E/D80E) |
| IC12 | L7A1433 | I.C.(M) | LSI LOGIC | (D85E/D80E) |
| IC13 | TC51V4260DFTS | I.C.(M) | TOSHIBA | (D85E/D80E) |
| IC14 | L7A1433 | I.C.(M) | LSI LOGIC | (D85E/D80E) |
| IC15 | TC51V4260DFTS | I.C.(M) | TOSHIBA | (D85E/D80E) |
| IC16 | JCL0029 | I.C.(M) | JVC | (D85E/D80E) |
| IC17 | TC528267FT-70-X | I.C.(M) | TOSHIBA | (D85E/D80E) |
| IC18 | SN74CBT3245PW-X | I.C.(M) | TEXAS | (D85E/D80E) |
| IC19 | TC52B267FT-70-X | I.C.(M) | TOSHIBA | (D85E/D80E) |
| IC20 | SN74CBT3245PW-X | I.C.(M) | TEXAS | (D85E/D80E) |
| IC21 | DS90C031TM-X | I.C.(M) | NS | (D85E/D80E) |
| IC22 | TC74HCT245AF-X | I.C.(M) | TOSHIBA | (D85E/D80E) |
| IC23 | S-81240PG-PJ-X | I.C.(M) | SEIKO | |
| IC24 | DS90C032TM-X | I.C.(M) | NS | |
| IC25 | TC74VHC125F-X | I.C.(M) | TOSHIBA | |
| IC26 | 74ACB6SJ-X | I.C.(M) | NS | |
| IC27 | 74AC175SJ-X | I.C.(M) | NS | |
| IC28 | EPM032VT-20-001 | I.C.(M) | ALTERA | |
| IC29 | TC74VHC126F-X | I.C.(M) | TOSHIBA | |
| IC30 | TC74VHC245F-X | I.C.(M) | TOSHIBA | |
| IC31 | JCL0030 | I.C.(M) | JVC | |
| IC32 | TC52B267FT-70-X | I.C.(M) | TOSHIBA | |
| IC33 | SN74CBT3245PW-X | I.C.(M) | TEXAS | |
| IC34 | TC74VHC245F-X | I.C.(M) | TOSHIBA | |
| IC35 | TC528267FT-70-X | I.C.(M) | TOSHIBA | |
| IC36 | SN74CBT3245PW-X | I.C.(M) | TEXAS | |
| IC37 | TC74VHC245F-X | I.C.(M) | TOSHIBA | |
| IC38 | TC74HCT245AF-X | I.C.(M) | TOSHIBA | |
| IC39 | TC74HCT245AF-X | I.C.(M) | TOSHIBA | |
| IC40 | L7A1433 | I.C.(M) | LSI LOGIC | |
| IC41 | TC51V4260DFTS | I.C.(M) | TOSHIBA | (D85E/D80E) |
| | UPD42S4260ALG5 | I.C.(M) | NEC | (D50E) |
| IC42 | L7A1433 | I.C.(M) | LSI LOGIC | |
| IC43 | TC51V4260DFTS | I.C.(M) | TOSHIBA | (D85E/D80E) |
| | UPD42S4260ALG5 | I.C.(M) | NEC | (D50E) |
| IC44 | MN67371F | I.C.(M) | MATSUSHITA | |
| IC45 | S-81224PG-PX-X | I.C.(M) | SEIKO | |
| IC46 | MN67371F | I.C.(M) | MATSUSHITA | |
| IC47 | S-81224PG-PX-X | I.C.(M) | SEIKO | |
| IC48 | TC74VHC74F-X | I.C.(M) | TOSHIBA | |
| IC49 | DS90C032TM-X | I.C.(M) | NS | |
| IC50 | DS90C032TM-X | I.C.(M) | NS | (D85E/D80E) |
| IC51 | TC74VHC244F-X | I.C.(M) | TOSHIBA | |
| IC52 | TC74VHC244F-X | I.C.(M) | TOSHIBA | (D85E/D80E) |
| IC53 | 74ACT241SJ-X | I.C.(M) | NS | |
| IC54 | TC7WH74FU-X | I.C.(M) | TOSHIBA | |
| IC55 | JCL0028 | I.C.(M) | JVC | |
| IC56 | UPD489001 | I.C.(M) | NEC | |
| IC57 | UPD489001 | I.C.(M) | NEC | |
| IC58 | UPD489001 | I.C.(M) | NEC | |
| IC59 | UPD489001 | I.C.(M) | NEC | |
| IC60 | DS90C031TM-X | I.C.(M) | NS | |
| IC61 | DS90C031TM-X | I.C.(M) | NS | |
| IC62 | TD74BC244F-X | I.C.(M) | TOSHIBA | |
| IC63 | DS90C031TM-X | I.C.(M) | NS | |
| IC64 | TC74VHC125F-X | I.C.(M) | TOSHIBA | |
| IC301 | TC74VHC541F-X | I.C.(M) | TOSHIBA | (D85E/D80E) |
| IC302 | TC74VHC00F-X | I.C.(M) | TOSHIBA | (D85E/D80E) |
| IC303 | TC7SH08F-X | I.C.(M) | TOSHIBA | |
| IC304 | M65401FP | I.C.(M) | MITSUBISHI | (D85E/D80E) |
| IC305 | M65401FP | I.C.(M) | MITSUBISHI | (D85E/D80E) |
| IC306 | S-81224PG-PX-X | I.C.(M) | SEIKO | (D85E/D80E) |
| IC307 | TC74HC04AF-X | I.C.(M) | TOSHIBA | |
| IC308 | TC74HC590AF-X | I.C.(M) | TOSHIBA | |
| IC309 | TC74HC11AF-X | I.C.(M) | TOSHIBA | |
| IC310 | TC74HC161AF-W | I.C.(M) | TOSHIBA | |
| IC311 | TC74HC107AF-X | I.C.(M) | TOSHIBA | |
| IC313 | M65401FP | I.C.(M) | MITSUBISHI | |
| IC314 | M52660FP | I.C.(M) | MITSUBISHI | |
| IC315 | TC7SH08F-X | I.C.(M) | TOSHIBA | |
| IC316 | M65401FP | I.C.(M) | MITSUBISHI | |
| IC317 | S-81224PG-PX-X | I.C.(M) | SEIKO | |
| IC318 | TC7SH08F-X | I.C.(M) | TOSHIBA | (D85E/D80E) |
| IC319 | TC7SH08F-X | I.C.(M) | TOSHIBA | (D85E/D80E) |
| IC401 | UPD78P58YGC-1** | I.C.(M) | NEC, CPU | (D85E/D80E) |
| IC402 | UPD78P58YGC-0** | I.C.(M) | NEC, CPU | |
| IC403 | TC74HCT541AF-X | I.C.(M) | TOSHIBA | (D85E/D80E) |
| IC404 | TC7S04F-X | I.C.(M) | TOSHIBA | (D85E/D80E) |
| IC405 | TC7S04F-X | I.C.(M) | TOSHIBA | |
| IC406 | TC7W04F-X | I.C.(M) | TOSHIBA | |
| IC407 | TC74HCT541AF-X | I.C.(M) | TOSHIBA | |
| IC408 | TC74HC4053AF-X | I.C.(M) | TOSHIBA | (D85E/D80E) |
| IC409 | TC74HC4053AF-X | I.C.(M) | TOSHIBA | (D85E/D80E) |
| IC410 | TC74HC4053AF-X | I.C.(M) | TOSHIBA | |
| IC411 | TC74HC4053AF-X | I.C.(M) | TOSHIBA | |
| IC412 | TC74HC4053AF-X | I.C.(M) | TOSHIBA | |
| IC413 | TC7W126FU-X | I.C.(M) | TOSHIBA | |
| IC414 | SN74CBT33B4PW-X | I.C.(M) | TEXAS | (D85E/D80E) |
| IC415 | SN74CBT33B4PW-X | I.C.(M) | TEXAS | (D85E/D80E) |
| IC416 | TC74VHC244F-X | I.C.(M) | TOSHIBA | (D85E/D80E) |
| IC417 | TC74VHC244F-X | I.C.(M) | TOSHIBA | |
| IC418 | TC74VHC244F-X | I.C.(M) | TOSHIBA | |
| IC419 | SN74CBT3245PW-X | I.C.(M) | TEXAS | |
| IC420 | SN74CBT3384PW-X | I.C.(M) | TEXAS | |
| IC421 | SN74CBT33B4PW-X | I.C.(M) | TEXAS | |
| Q1 | DTC124EUA-X | TRANSISTOR | ROHM | (D85E/D80E) |
| D401 | DA204U-X | DIODE | ROHM | |
| R1 | NRSA63J-101X | M.G.RESISTOR | 100 1/16W | (D85E/D80E) |
| R2 | NRSA63J-101X | M.G.RESISTOR | 100 1/16W | (D85E/D80E) |
| R3 | NRSA63J-101X | M.G.RESISTOR | 100 1/16W | (D85E/D80E) |
| R4 | NRSA63J-101X | M.G.RESISTOR | 100 1/16W | (D85E/D80E) |
| R5 | NRSA63J-101X | M.G.RESISTOR | 100 1/16W | (D85E/D80E) |
| R6 | NRSA63J-101X | M.G.RESISTOR | 100 1/16W | (D85E/D80E) |
| R7 | NRSA63J-101X | M.G.RESISTOR | 100 1/16W | (D85E/D80E) |

[PV PROCESS]

| Symbol No. | Part No. | Part Name | Description |
|---|---|---|---|
| R8 | NRSA63J-101X | M.G.RESISTOR | 100 1/16W (D85E/D80E) |
| R9 | NRSA63J-101X | M.G.RESISTOR | 100 1/16W (D85E/D80E) |
| R10 | NRSA63J-101X | M.G.RESISTOR | 100 1/16W (D85E/D80E) |
| R11 | NRSA63J-101X | M.G.RESISTOR | 100 1/16W (D85E/D80E) |
| R12 | NRSA63J-101X | M.G.RESISTOR | 100 1/16W (D85E/D80E) |
| R13 | NRSA63J-101X | M.G.RESISTOR | 100 1/16W (D85E/D80E) |
| R14 | NRSA63J-101X | M.G.RESISTOR | 100 1/16W (D85E/D80E) |
| R15 | NRSA63J-101X | M.G.RESISTOR | 100 1/16W (D85E/D80E) |
| R16 | NRSA63J-101X | M.G.RESISTOR | 100 1/16W (D85E/D80E) |
| R17 | NRSA63J-101X | M.G.RESISTOR | 100 1/16W (D85E/D80E) |
| R18 | NRSA63J-101X | M.G.RESISTOR | 100 1/16W (D85E/D80E) |
| R19 | NRSA63J-101X | M.G.RESISTOR | 100 1/16W (D85E/D80E) |
| R20 | NRSA63J-101X | M.G.RESISTOR | 100 1/16W (D85E/D80E) |
| R21 | NRSA63J-101X | M.G.RESISTOR | 100 1/16W (D85E/D80E) |
| R22 | NRSA63J-101X | M.G.RESISTOR | 100 1/16W (D85E/D80E) |
| R23 | NRSA63J-101X | M.G.RESISTOR | 100 1/16W (D85E/D80E) |
| R24 | NRSA63J-101X | M.G.RESISTOR | 100 1/16W (D85E/D80E) |
| R32 | NRSA63J-105X | M.G.RESISTOR | 1M 1/16W (D85E/D80E) |
| R33 | NRSA63J-103X | M.G.RESISTOR | 10k 1/16W (D85E/D80E) |
| R34 | NRSA63J-101X | M.G.RESISTOR | 100 1/16W (D85E/D80E) |
| R35 | NRSA63J-101X | M.G.RESISTOR | 100 1/16W (D85E/D80E) |
| R36 | NRSA63J-101X | M.G.RESISTOR | 100 1/16W (D85E/D80E) |
| R37 | NRSA63J-101X | M.G.RESISTOR | 100 1/16W (D85E/D80E) |
| R38 | NRSA63J-101X | M.G.RESISTOR | 100 1/16W (D85E/D80E) |
| R39 | NRSA63J-101X | M.G.RESISTOR | 100 1/16W (D85E/D80E) |
| R40 | NRSA63J-221X | M.G.RESISTOR | 220 1/16W (D85E/D80E) |
| R41 | NRSA63J-221X | M.G.RESISTOR | 220 1/16W (D85E/D80E) |
| R42 | NRSA63J-221X | M.G.RESISTOR | 220 1/16W (D85E/D80E) |
| R43 | NRSA63J-221X | M.G.RESISTOR | 220 1/16W (D85E/D80E) |
| R44 | NRSA63J-102X | M.G.RESISTOR | 1k 1/16W (D85E/D80E) |
| R45 | NRSA63J-221X | M.G.RESISTOR | 220 1/16W (D85E/D80E) |
| R46 | NRSA63J-221X | M.G.RESISTOR | 220 1/16W (D85E/D80E) |
| R47 | NRSA63J-101X | M.G.RESISTOR | 100 1/16W |
| R48 | NRSA63J-101X | M.G.RESISTOR | 100 1/16W |
| R49 | NRSA63J-101X | M.G.RESISTOR | 100 1/16W |
| R50 | NRSA63J-101X | M.G.RESISTOR | 100 1/16W |
| R51 | NRSA63J-101X | M.G.RESISTOR | 100 1/16W |
| R52 | NRSA63J-101X | M.G.RESISTOR | 100 1/16W |
| R53 | NRSA63J-101X | M.G.RESISTOR | 100 1/16W |
| R54 | NRSA63J-101X | M.G.RESISTOR | 100 1/16W |
| R55 | NRSA63J-101X | M.G.RESISTOR | 100 1/16W |
| R56 | NRSA63J-101X | M.G.RESISTOR | 100 1/16W |
| R57 | NRSA63J-101X | M.G.RESISTOR | 100 1/16W |
| R58 | NRSA63J-101X | M.G.RESISTOR | 100 1/16W |
| R59 | NRSA63J-102X | M.G.RESISTOR | 1k 1/16W |
| R60 | NRSA63J-104X | M.G.RESISTOR | 100k 1/16W |
| R61 | NRSA63J-102X | M.G.RESISTOR | 1k 1/16W |
| R62 | NRSA63J-104X | M.G.RESISTOR | 100k 1/16W |
| R63 | NRSA63J-102X | M.G.RESISTOR | 1k 1/16W |
| R64 | NRSA63J-104X | M.G.RESISTOR | 100k 1/16W |
| R65 | NRSA63J-102X | M.G.RESISTOR | 1k 1/16W (D85E/D80E) |
| R66 | NRSA63J-104X | M.G.RESISTOR | 100k 1/16W |
| R67 | NRSA63J-102X | M.G.RESISTOR | 1k 1/16W |
| R68 | NRSA63J-104X | M.G.RESISTOR | 100k 1/16W |
| R69 | NRSA63J-102X | M.G.RESISTOR | 1k 1/16W |
| R70 | NRSA63J-104X | M.G.RESISTOR | 100k 1/16W |
| R71 | NRSA63J-102X | M.G.RESISTOR | 1k 1/16W |
| R72 | NRSA63J-104X | M.G.RESISTOR | 100k 1/16W |
| R73 | NRSA63J-0R0X | M.G.RESISTOR | 0 1/16W (D50E) |

| Symbol No. | Part No. | Part Name | Description |
|---|---|---|---|
| R74 | NRSA63J-102X | M.G.RESISTOR | 1k 1/16W |
| R75 | NRSA63J-221X | M.G.RESISTOR | 220 1/16W |
| R76 | NRSA63J-221X | M.G.RESISTOR | 220 1/16W (D85E/D80E) |
| R77 | NRSA63J-102X | M.G.RESISTOR | 1k 1/16W |
| R78 | NRSA63J-102X | M.G.RESISTOR | 1k 1/16W |
| R79 | NRSA63J-102X | M.G.RESISTOR | 1k 1/16W |
| R80 | NRSA63J-102X | M.G.RESISTOR | 1k 1/16W |
| R81 | NRSA63J-102X | M.G.RESISTOR | 1k 1/16W |
| R82 | NRSA63J-102X | M.G.RESISTOR | 1k 1/16W |
| R83 | NRSA63J-102X | M.G.RESISTOR | 1k 1/16W |
| R84 | NRSA63J-102X | M.G.RESISTOR | 1k 1/16W |
| R85 | NRSA63J-102X | M.G.RESISTOR | 1k 1/16W |
| R86 | NRSA63J-102X | M.G.RESISTOR | 1k 1/16W |
| R87 | NRSA63J-101X | M.G.RESISTOR | 100 1/16W |
| R88 | NRSA63J-101X | M.G.RESISTOR | 100 1/16W |
| R89 | NRSA63J-101X | M.G.RESISTOR | 100 1/16W (D85E/D80E) |
| R90 | NRSA63J-101X | M.G.RESISTOR | 100 1/16W (D85E/D80E) |
| R91 | NRSA63J-101X | M.G.RESISTOR | 100 1/16W |
| R92 | NRSA63J-392X | M.G.RESISTOR | 3.9k 1/16W |
| R93 | NRSA63J-101X | M.G.RESISTOR | 100 1/16W (D85E/D80E) |
| R94 | NRSA63J-101X | M.G.RESISTOR | 100 1/16W (D85E/D80E) |
| R95 | NRSA63J-101X | M.G.RESISTOR | 100 1/16W (D85E/D80E) |
| R96 | NRSA63J-101X | M.G.RESISTOR | 100 1/16W |
| R97 | NRSA63J-101X | M.G.RESISTOR | 100 1/16W |
| R98 | NRSA63J-101X | M.G.RESISTOR | 100 1/16W |
| R99 | NRSA63J-101X | M.G.RESISTOR | 100 1/16W |
| R102 | NRSA63J-101X | M.G.RESISTOR | 100 1/16W |
| R103 | NRSA63J-101X | M.G.RESISTOR | 100 1/16W |
| R104 | NRSA63J-101X | M.G.RESISTOR | 100 1/16W |
| R107 | NRSA63J-101X | M.G.RESISTOR | 100 1/16W (D85E/D80E) |
| R110 | NRSA63J-101X | M.G.RESISTOR | 100 1/16W (D85E/D80E) |
| R111 | NRSA63J-101X | M.G.RESISTOR | 100 1/16W (D85E/D80E) |
| R112 | NRSA63J-101X | M.G.RESISTOR | 100 1/16W (D85E/D80E) |
| R115 | NRSA63J-101X | M.G.RESISTOR | 100 1/16W (D85E/D80E) |
| R116 | NRSA63J-101X | M.G.RESISTOR | 100 1/16W (D85E/D80E) |
| R117 | NRSA63J-0R0X | M.G.RESISTOR | 0 1/16W |
| R120 | NRSA63J-330X | M.G.RESISTOR | 33 1/16W |
| R121 | NRSA63J-330X | M.G.RESISTOR | 33 1/16W |
| R122 | NRSA63J-330X | M.G.RESISTOR | 33 1/16W (D85E/D80E) |
| R123 | NRSA63J-330X | M.G.RESISTOR | 33 1/16W |
| R124 | NRSA63J-330X | M.G.RESISTOR | 33 1/16W |
| R125 | NRSA63J-330X | M.G.RESISTOR | 33 1/16W |
| R126 | NRSA63J-330X | M.G.RESISTOR | 33 1/16W |
| R127 | NRSA63J-330X | M.G.RESISTOR | 33 1/16W |
| R128 | NRSA63J-330X | M.G.RESISTOR | 33 1/16W |
| R129 | NRSA63J-330X | M.G.RESISTOR | 33 1/16W |
| R130 | NRSA63J-330X | M.G.RESISTOR | 33 1/16W (D85E/D80E) |
| R131 | NRSA63J-330X | M.G.RESISTOR | 33 1/16W (D85E/D80E) |
| R132 | NRSA63J-330X | M.G.RESISTOR | 33 1/16W (D85E/D80E) |
| R133 | NRSA63J-330X | M.G.RESISTOR | 33 1/16W (D85E/D80E) |
| R134 | NRSA63J-330X | M.G.RESISTOR | 33 1/16W (D85E/D80E) |
| R135 | NRSA63J-101X | M.G.RESISTOR | 100 1/16W |
| R136 | NRSA63J-101X | M.G.RESISTOR | 100 1/16W |
| R137 | NRSA63J-101X | M.G.RESISTOR | 100 1/16W |
| R138 | NRSA63J-101X | M.G.RESISTOR | 100 1/16W |
| R139 | NRSA63J-101X | M.G.RESISTOR | 100 1/16W |
| R140 | NRSA63J-101X | M.G.RESISTOR | 100 1/16W |
| R141 | NRSA63J-101X | M.G.RESISTOR | 100 1/16W |
| R142 | NRSA63J-101X | M.G.RESISTOR | 100 1/16W |

| Symboi No. | Part No. | Part Nams | Dascription |
|---|---|---|---|
| R143 | NRSA63J-101X | M.G.RESISTOR | 100 1/16W |
| R144 | NRSA63J-101X | M.G.RESISTOR | 100 1/16W |
| R145 | NRSA63J-101X | M.G.RESISTOR | 100 1/16W |
| R146 | NRSA63J-101X | M.G.RESISTOR | 100 1/16W |
| R147 | NRSA63J-101X | M.G.RESISTOR | 100 1/16W |
| R148 | NRSA63J-101X | M.G.RESISTOR | 100 1/16W |
| R149 | NRSA63J-101X | M.G.RESISTOR | 100 1/16W |
| R150 | NRSA63J-101X | M.G.RESISTOR | 100 1/16W |
| R152 | NRSA63J-101X | M.G.RESISTOR | 100 1/16W |
| R153 | NRSA63J-101X | M.G.RESISTOR | 100 1/16W |
| R154 | NRSA63J-101X | M.G.RESISTOR | 100 1/16W |
| R155 | NRSA63J-101X | M.G.RESISTOR | 100 1/16W |
| R158 | NRSA63J-101X | M.G.RESISTOR | 100 1/16W |
| R159 | NRSA63J-101X | M.G.RESISTOR | 100 1/16W |
| R167 | NRSA63J-101X | M.G.RESISTOR | 100 1/16W (D50E) |
| R16B | NRSA63J-101X | M.G.RESISTOR | 100 1/16W (D50E) |
| R169 | NRSA63J-101X | M.G.RESISTOR | 100 1/16W (D50E) |
| R174 | NRSA63J-0R0X | M.G.RESISTOR | 0 1/16W (D50E) |
| R175 | NRSA63J-0R0X | M.G.RESISTOR | 0 1/16W (D50E) |
| R176 | NRSA63J-330X | M.G.RESISTOR | 33 1/16W |
| R177 | NRSA63J-104X | M.G.RESISTOR | 100k 1/16W (D50E) |
| R178 | NRSA63J-104X | M.G.RESISTOR | 100k 1/16W (D50E) |
| R179 | NRSA63J-104X | M.G.RESISTOR | 100k 1/16W (D50E) |
| R180 | NRSA63J-330X | M.G.RESISTOR | 33 1/16W |
| R1B1 | NRSA63J-0R0X | M.G.RESISTOR | 0 1/16W (D50E) |
| R182 | NRSA63J-101X | M.G.RESISTOR | 100 1/16W |
| R183 | NRSA63J-101X | M.G.RESISTOR | 100 1/16W |
| R184 | NRSA63J-103X | M.G.RESISTOR | 10k 1/16W (D50E) |
| R302 | NRSA63J-104X | M.G.RESISTOR | 100k 1/16W (D85E/D80E) |
| R303 | NRSA63J-470X | M.G.RESISTOR | 47 1/16W (D85E/D80E) |
| R304 | NRSA63J-470X | M.G.RESISTOR | 47 1/16W (D85E/D80E) |
| R305 | NRSA63J-470X | M.G.RESISTOR | 47 1/16W (D85E/D80E) |
| R306 | NRSA63J-470X | M.G.RESISTOR | 47 1/16W (D85E/D80E) |
| R307 | NRSA63J-470X | M.G.RESISTOR | 47 1/16W (D85E/D80E) |
| R308 | NRSA63J-470X | M.G.RESISTOR | 47 1/16W (D85E/D80E) |
| R309 | NRSA63J-470X | M.G.RESISTOR | 47 1/16W (D85E/D80E) |
| R310 | NRSA63J-470X | M.G.RESISTOR | 47 1/16W (D85E/D80E) |
| R311 | NRSA63J-470X | M.G.RESISTOR | 47 1/16W |
| R312 | NRSA63J-103X | M.G.RESISTOR | 10k 1/16W |
| R313 | NRSA63J-103X | M.G.RESISTOR | 10k 1/16W |
| R315 | NRSA63J-222X | M.G.RESISTOR | 2.2k 1/16W |
| R316 | NRSA63J-561X | M.G.RESISTOR | 560 1/16W |
| R317 | NRSA63J-391X | M.G.RESISTOR | 390 1/16W |
| R318 | NRSA63J-B23X | M.G.RESISTOR | 82k 1/16W |
| R319 | NRSA63J-392X | M.G.RESISTOR | 3.9k 1/16W |
| R320 | NRSA63J-333X | M.G.RESISTOR | 33k 1/16W |
| R321 | NRSA63J-103X | M.G.RESISTOR | 10k 1/16W |
| R322 | NRSA63J-103X | M.G.RESISTOR | 10k 1/16W |
| R323 | NRSA63J-101X | M.G.RESISTOR | 100 1/16W |
| R324 | NRSA63J-101X | M.G.RESISTOR | 100 1/16W |
| R325 | NRSA63J-101X | M.G.RESISTOR | 100 1/16W |
| R326 | NRSA63J-101X | M.G.RESISTOR | 100 1/16W |
| R327 | NRSA63J-101X | M.G.RESISTOR | 100 1/16W |
| R328 | NRSA63J-101X | M.G.RESISTOR | 100 1/16W |
| R329 | NRSA63J-103X | M.G.RESISTOR | 10k 1/16W (D85E/D80E) |
| R330 | NRSA63J-154X | M.G.RESISTOR | 150k 1/16W |
| R331 | NRSA63J-154X | M.G.RESISTOR | 150k 1/16W |
| R332 | NRSA63J-272X | M.G.RESISTOR | 2.7k 1/16W |
| R333 | NRSA63J-0R0X | M.G.RESISTOR | 0 1/16W |

| Symboi No. | Part No. | Part Nsms | Description |
|---|---|---|---|
| R334 | NRSA63J-104X | M.G.RESISTOR | 100k 1/16W (D85E/D80E) |
| R335 | NRSA63J-104X | M.G.RESISTOR | 100k 1/16W (D85E/D80E) |
| R336 | NRSA63J-104X | M.G.RESISTOR | 100k 1/16W (D85E/D80E) |
| R337 | NRSA63J-104X | M.G.RESISTOR | 100k 1/16W (D85E/D80E) |
| R338 | NRSA63J-104X | M.G.RESISTOR | 100k 1/16W (D85E/D80E) |
| R401 | NRSA63J-105X | M.G.RESISTOR | 1M 1/16W |
| R402 | NRSA63J-472X | M.G.RESISTOR | 4.7k 1/16W |
| R403 | NRSA63J-0R0X | M.G.RESISTOR | 0 1/16W (D85E/D80E) |
| R404 | NRSA63J-0R0X | M.G.RESISTOR | 0 1/16W (D85E/D80E) |
| R405 | NRSA63J-0R0X | M.G.RESISTOR | 0 1/16W |
| R406 | NRSA63J-562X | M.G.RESISTOR | 5.6k 1/16W (D85E/D80E) |
| R407 | NRSA63J-562X | M.G.RESISTOR | 5.6k 1/16W (D85E/D80E) |
| R408 | NRSA63J-562X | M.G.RESISTOR | 5.6k 1/16W (D85E/D80E) |
| R409 | NRSA63J-562X | M.G.RESISTOR | 5.6k 1/16W (D85E/D80E) |
| R410 | NRSA63J-562X | M.G.RESISTOR | 5.6k 1/16W (D85E/D80E) |
| R411 | NRSA63J-562X | M.G.RESISTOR | 5.6k 1/16W (D85E/D80E) |
| R412 | NRSA63J-562X | M.G.RESISTOR | 5.6k 1/16W (D85E/D80E) |
| R413 | NRSA63J-562X | M.G.RESISTOR | 5.6k 1/16W (D85E/D80E) |
| R414 | NRSA63J-562X | M.G.RESISTOR | 5.6k 1/16W |
| R415 | NRSA63J-562X | M.G.RESISTOR | 5.6k 1/16W |
| R416 | NRSA63J-562X | M.G.RESISTOR | 5.6k 1/16W |
| R417 | NRSA63J-562X | M.G.RESISTOR | 5.6k 1/16W |
| R41B | NRSA63J-562X | M.G.RESISTOR | 5.6k 1/16W |
| R419 | NRSA63J-562X | M.G.RESISTOR | 5.6k 1/16W (D85E/D80E) |
| R420 | NRSA63J-562X | M.G.RESISTOR | 5.6k 1/16W |
| R421 | NRSA63J-562X | M.G.RESISTOR | 5.6k 1/16W |
| R422 | NRSA63J-562X | M.G.RESISTOR | 5.6k 1/16W |
| R423 | NRSA63J-562X | M.G.RESISTOR | 5.6k 1/16W |
| R424 | NRSA63J-562X | M.G.RESISTOR | 5.6k 1/16W |
| R425 | NRSA63J-562X | M.G.RESISTOR | 5.6k 1/16W |
| R426 | NRSA63J-562X | M.G.RESISTOR | 5.6k 1/16W |
| R427 | NRSA63J-562X | M.G.RESISTOR | 5.6k 1/16W |
| R42B | NRSA63J-0R0X | M.G.RESISTOR | 0 1/16W (D50E) |
| R429 | NRSA63J-562X | M.G.RESISTOR | 5.6k 1/16W |
| R430 | NRSA63J-152X | M.G.RESISTOR | 1.5k 1/16W (D85E/D80E) |
| R431 | NRSA63J-152X | M.G.RESISTOR | 1.5k 1/16W (D85E/D80E) |
| R432 | NRSA63J-152X | M.G.RESISTOR | 1.5k 1/16W |
| R433 | NRSA63J-152X | M.G.RESISTOR | 1.5k 1/16W |
| R434 | NRSA63J-0R0X | M.G.RESISTOR | 0 1/16W |
| R435 | NRSA63J-331X | M.G.RESISTOR | 330 1/16W |
| R436 | NRSA63J-331X | M.G.RESISTOR | 330 1/16W |
| R437 | NRSA63J-331X | M.G.RESISTOR | 330 1/16W |
| R438 | NRSA63J-331X | M.G.RESISTOR | 330 1/16W |
| R439 | NRSA63J-181X | M.G.RESISTOR | 180 1/16W |
| R440 | NRSA63J-181X | M.G.RESISTOR | 180 1/16W |
| R441 | NRSA63J-331X | M.G.RESISTOR | 330 1/16W |
| R442 | NRSA63J-331X | M.G.RESISTOR | 330 1/16W |
| C1 | NEH91CM-106X | E.CAPACITOR | 10 16V (D85E/D80E) |
| C2 | NCB31EK-223X | CER.CAPACITOR | 0.022 25V (D85E/D80E) |
| C3 | NCB31EK-223X | CER.CAPACITOR | 0.022 25V (D85E/D80E) |
| C4 | NCB31EK-223X | CER.CAPACITOR | 0.022 25V (D85E/D80E) |
| C5 | NCB31EK-223X | CER.CAPACITOR | 0.022 25V (D85E/D80E) |
| C6 | NCB31EK-223X | CER.CAPACITOR | 0.022 25V (D85E/D80E) |
| C7 | NCB31EK-223X | CER.CAPACITOR | 0.022 25V (D85E/D80E) |
| C8 | NCB31EK-223X | CER.CAPACITOR | 0.022 25V (D85E/D80E) |
| C9 | NCB31EK-223X | CER.CAPACITOR | 0.022 25V (D85E/D80E) |
| C10 | NCB31EK-223X | CER.CAPACITOR | 0.022 25V (D85E/D80E) |

[PV PROCESS]

| Symbol No. | Part No. | Part Name | Description |
|---|---|---|---|
| C11 | NCB31EK-223X | CER.CAPACITOR | 0.022 25V (D85E/D80E) |
| C12 | NCB31EK-223X | CER.CAPACITOR | 0.022 25V (D85E/D80E) |
| C13 | NCF31CZ-334X | CER.CAPACITOR | 0.33 16V (D85E/D80E) |
| C14 | NCF31CZ-104X | CER.CAPACITOR | 0.1 16V (D85E/D80E) |
| C15 | NCB31EK-223X | CER.CAPACITOR | 0.022 25V (D85E/D80E) |
| C16 | NCB31EK-223X | CER.CAPACITOR | 0.022 25V (D85E/D80E) |
| C17 | NCF31CZ-334X | CER.CAPACITOR | 0.33 16V (D85E/D80E) |
| C18 | NCF31CZ-104X | CER.CAPACITOR | 0.1 16V (D85E/D80E) |
| C19 | NCB31EK-223X | CER.CAPACITOR | 0.022 25V (D85E/D80E) |
| C20 | NCB31EK-223X | CER.CAPACITOR | 0.022 25V (D85E/D80E) |
| C21 | NCB31EK-223X | CER.CAPACITOR | 0.022 25V (D85E/D80E) |
| C22 | NCB31EK-223X | CER.CAPACITOR | 0.022 25V (D85E/D80E) |
| C23 | NCB31EK-223X | CER.CAPACITOR | 0.022 25V (D85E/D80E) |
| C24 | NCB31EK-223X | CER.CAPACITOR | 0.022 25V (D85E/D80E) |
| C25 | NCB31EK-223X | CER.CAPACITOR | 0.022 25V (D85E/D80E) |
| C26 | NCB31EK-223X | CER.CAPACITOR | 0.022 25V (D85E/D80E) |
| C27 | NCB31EK-223X | CER.CAPACITOR | 0.022 25V (D85E/D80E) |
| C28 | NCB31EK-223X | CER.CAPACITOR | 0.022 25V (D85E/D80E) |
| C29 | NCB31EK-223X | CER.CAPACITOR | 0.022 25V (D85E/D80E) |
| C30 | NCB31EK-223X | CER.CAPACITOR | 0.022 25V (D85E/D80E) |
| C31 | NCB31EK-223X | CER.CAPACITOR | 0.022 25V (D85E/D80E) |
| C32 | NCB31HK-102X | CER.CAPACITOR | 1000P 50V (D85E/D80E) |
| C33 | NDC31HJ-7R0X | CER.CAPACITOR | 7P 50V (D85E/D80E) |
| C34 | NDC31HJ-180X | CER.CAPACITOR | 18P 50V (D85E/D80E) |
| C37 | NCB31EK-223X | CER.CAPACITOR | 0.022 25V (D85E/D80E) |
| C38 | NCB31EK-223X | CER.CAPACITOR | 0.022 25V (D85E/D80E) |
| C39 | NCB31EK-223X | CER.CAPACITOR | 0.022 25V (D85E/D80E) |
| C40 | NCB31EK-223X | CER.CAPACITOR | 0.022 25V (D85E/D80E) |
| C41 | NCB31EK-223X | CER.CAPACITOR | 0.022 25V (D85E/D80E) |
| C42 | NEH91CM-106X | E.CAPACITOR | 10 16V (D85E/D80E) |
| C43 | NCB31EK-223X | CER.CAPACITOR | 0.022 25V (D85E/D80E) |
| C44 | NCF31CZ-334X | CER.CAPACITOR | 0.33 16V |
| C45 | NCF31CZ-104X | CER.CAPACITOR | 0.1 16V |
| C46 | NEH91CM-106X | E.CAPACITOR | 10 16V |
| C47 | NCB31EK-223X | CER.CAPACITOR | 0.022 25V |
| C48 | NCB31EK-223X | CER.CAPACITOR | 0.022 25V |
| C49 | NCB31EK-223X | CER.CAPACITOR | 0.022 25V |
| C50 | NCB31EK-223X | CER.CAPACITOR | 0.022 25V |
| C51 | NCB31EK-223X | CER.CAPACITOR | 0.022 25V |
| C52 | NCB31EK-223X | CER.CAPACITOR | 0.022 25V |
| C53 | NCB31EK-223X | CER.CAPACITOR | 0.022 25V |
| C54 | NCB31EK-223X | CER.CAPACITOR | 0.022 25V |
| C55 | NCB31EK-223X | CER.CAPACITOR | 0.022 25V |
| C56 | NCB31EK-223X | CER.CAPACITOR | 0.022 25V |
| C57 | NCB31EK-223X | CER.CAPACITOR | 0.022 25V |
| C58 | NCB31EK-223X | CER.CAPACITOR | 0.022 25V |
| C59 | NCB31EK-223X | CER.CAPACITOR | 0.022 25V |
| C60 | NCB31EK-223X | CER.CAPACITOR | 0.022 25V |
| C61 | NCB31EK-223X | CER.CAPACITOR | 0.022 25V |
| C62 | NCB31EK-223X | CER.CAPACITOR | 0.022 25V |
| C63 | NCB31EK-223X | CER.CAPACITOR | 0.022 25V |
| C64 | NCB31EK-223X | CER.CAPACITOR | 0.022 25V |
| C65 | NCB31EK-223X | CER.CAPACITOR | 0.022 25V |
| C66 | NCB31EK-223X | CER.CAPACITOR | 0.022 25V |
| C67 | NCB31EK-223X | CER.CAPACITOR | 0.022 25V |
| C68 | NCB31EK-223X | CER.CAPACITOR | 0.022 25V |
| C69 | NCB31EK-223X | CER.CAPACITOR | 0.022 25V |
| C70 | NCB31EK-223X | CER.CAPACITOR | 0.022 25V |
| C71 | NCB31EK-223X | CER.CAPACITOR | 0.022 25V |
| C72 | NCB31EK-223X | CER.CAPACITOR | 0.022 25V |

| Symbol No. | Part No. | Part Name | Description |
|---|---|---|---|
| C73 | NCB31EK-223X | CER.CAPACITOR | 0.022 25V |
| C74 | NCB31EK-223X | CER.CAPACITOR | 0.022 25V |
| C75 | NCB31EK-223X | CER.CAPACITOR | 0.022 25V |
| C76 | NCF31CZ-334X | CER.CAPACITOR | 0.33 16V |
| C77 | NCF31CZ-104X | CER.CAPACITOR | 0.1 16V |
| C78 | NCB31EK-223X | CER.CAPACITOR | 0.022 25V |
| C79 | NCB31EK-223X | CER.CAPACITOR | 0.022 25V |
| C80 | NCF31CZ-334X | CER.CAPACITOR | 0.33 16V |
| C81 | NCF31CZ-104X | CER.CAPACITOR | 0.1 16V |
| C82 | NCB31EK-223X | CER.CAPACITOR | 0.022 25V |
| C83 | NCB31EK-223X | CER.CAPACITOR | 0.022 25V |
| C84 | NEH91CM-106X | E.CAPACITOR | 10 16V |
| C85 | NCB31EK-223X | CER.CAPACITOR | 0.022 25V (D85E/D80E) |
| C86 | NCB31EK-223X | CER.CAPACITOR | 0.022 25V |
| C87 | NCB31EK-223X | CER.CAPACITOR | 0.022 25V (D85E/D80E) |
| C88 | NCB31EK-223X | CER.CAPACITOR | 0.022 25V |
| C89 | NCB31EK-223X | CER.CAPACITOR | 0.022 25V |
| C90 | NCB31EK-223X | CER.CAPACITOR | 0.022 25V |
| C91 | NCB31EK-223X | CER.CAPACITOR | 0.022 25V |
| C92 | NCB31EK-223X | CER.CAPACITOR | 0.022 25V |
| C93 | NCB31EK-223X | CER.CAPACITOR | 0.022 25V |
| C94 | NCB31EK-223X | CER.CAPACITOR | 0.022 25V |
| C95 | NCB31EK-223X | CER.CAPACITOR | 0.022 25V |
| C96 | NCB31EK-223X | CER.CAPACITOR | 0.022 25V |
| C97 | NCB31EK-223X | CER.CAPACITOR | 0.022 25V |
| C98 | NCB31EK-223X | CER.CAPACITOR | 0.022 25V |
| C99 | NEH91CM-106X | E.CAPACITOR | 10 16V |
| C100 | NCB31EK-223X | CER.CAPACITOR | 0.022 25V |
| C101 | NCB31EK-223X | CER.CAPACITOR | 0.022 25V |
| C102 | NCB31EK-223X | CER.CAPACITOR | 0.022 25V |
| C103 | NCB31EK-223X | CER.CAPACITOR | 0.022 25V |
| C104 | NEH71AM-227X | E.CAPACITOR | 220 10V |
| C105 | NCB31EK-223X | CER.CAPACITOR | 0.022 25V |
| C106 | NEH71AM-227X | E.CAPACITOR | 220 10V |
| C107 | NCB31EK-223X | CER.CAPACITOR | 0.022 25V |
| C108 | NCB31EK-223X | CER.CAPACITOR | 0.022 25V |
| C109 | NEH90JM-476X | E.CAPACITOR | 47 6.3V (D85E/D80E) |
| C110 | NEH90JM-476X | E.CAPACITOR | 47 6.3V (D85E/D80E) |
| C111 | NEH90JM-476X | E.CAPACITOR | 47 6.3V |
| C112 | NEH90JM-476X | E.CAPACITOR | 47 6.3V |
| C301 | NCB31HK-103X | CER.CAPACITOR | 0.01 50V (D85E/D80E) |
| C302 | NCB31HK-103X | CER.CAPACITOR | 0.01 50V (D85E/D80E) |
| C303 | NCB31HK-103X | CER.CAPACITOR | 0.01 50V (D85E/D80E) |
| C304 | NCB31HK-103X | CER.CAPACITOR | 0.01 50V (D85E/D80E) |
| C305 | NCB31HK-103X | CER.CAPACITOR | 0.01 50V (D85E/D80E) |
| C306 | NCB31HK-103X | CER.CAPACITOR | 0.01 50V (D85E/D80E) |
| C307 | NCB31HK-103X | CER.CAPACITOR | 0.01 50V (D85E/D80E) |
| C308 | NCB31HK-103X | CER.CAPACITOR | 0.01 50V (D85E/D80E) |
| C309 | NCB31HK-103X | CER.CAPACITOR | 0.01 50V (D85E/D80E) |
| C310 | NCB31HK-103X | CER.CAPACITOR | 0.01 50V (D85E/D80E) |
| C311 | NCB31HK-103X | CER.CAPACITOR | 0.01 50V (D85E/D80E) |
| C312 | NCB31HK-103X | CER.CAPACITOR | 0.01 50V (D85E/D80E) |
| C313 | NCB31HK-103X | CER.CAPACITOR | 0.01 50V (D85E/D80E) |
| C314 | NCB31HK-103X | CER.CAPACITOR | 0.01 50V (D85E/D80E) |
| C315 | NCB31HK-103X | CER.CAPACITOR | 0.01 50V (D85E/D80E) |
| C316 | NCB31HK-103X | CER.CAPACITOR | 0.01 50V (D85E/D80E) |
| C317 | NCF31CZ-104X | CER.CAPACITOR | 0.1 16V (D85E/D80E) |
| C318 | NCF31CZ-104X | CER.CAPACITOR | 0.1 16V (D85E/D80E) |
| C319 | NCB31HK-103X | CER.CAPACITOR | 0.01 50V |
| C320 | NCB31HK-103X | CER.CAPACITOR | 0.01 50V |

| Symboi No. | Psrt No. | Psrt Nsms | Dsscription | | |
|---|---|---|---|---|---|
| C321 | NCB31HK-103X | CER.CAPACITOR | 0.01 | | 50V |
| C322 | NCB31HK-103X | CER.CAPACITOR | 0.01 | | 50V |
| C323 | NCB31HK-103X | CER.CAPACITOR | 0.01 | | 50V |
| C324 | NCB31HK-103X | CER.CAPACITOR | 0.01 | | 50V |
| C325 | NCB31HK-103X | CER.CAPACITOR | 0.01 | | 50V |
| C326 | NCB31HK-103X | CER.CAPACITOR | 0.01 | | 50V |
| C327 | NCB31HK-103X | CER.CAPACITOR | 0.01 | | 50V |
| C328 | NCB31HK-103X | CER.CAPACITOR | 0.01 | | 50V |
| C329 | NCB31HK-103X | CER.CAPACITOR | 0.01 | | 50V |
| C330 | NCB31HK-103X | CER.CAPACITOR | 0.01 | | 50V |
| C331 | NEH91HM-105X | E.CAPACITOR | 1 | | 50V |
| C332 | NDC31HJ-180X | CER.CAPACITOR | 18P | | 50V |
| C333 | NCB31HK-103X | CER.CAPACITOR | 0.01 | | 50V |
| C334 | NCB31HK-103X | CER.CAPACITOR | 0.01 | | 50V |
| C335 | NEZ0001-107X | E.CAPACITOR | 100 | | |
| C336 | NEZ0001-107X | E.CAPACITOR | 100 | | |
| C337 | NCB31HK-103X | CER.CAPACITOR | 0.01 | | 50V |
| C338 | NDC31HJ-180X | CER.CAPACITOR | 18P | | 50V |
| C339 | NCB31HK-682X | CER.CAPACITOR | 6800P | | 50V |
| C340 | NCF31CZ-104X | CER.CAPACITOR | 0.1 | | 16V |
| C341 | NEH91HM-225X | E.CAPACITOR | 2.2 | | 50V |
| C342 | NEH91HM-225X | E.CAPACITOR | 2.2 | | 50V |
| C343 | NEH91CM-106X | E.CAPACITOR | 10 | | 16V |
| C344 | NEH91CM-106X | E.CAPACITOR | 10 | | 16V |
| C345 | NCB31HK-103X | CER.CAPACITOR | 0.01 | | 50V |
| C346 | NEH91HM-105X | E.CAPACITOR | 1 | | 50V |
| C347 | NDC31HJ-1B0X | CER.CAPACITOR | 18P | | 50V |
| C348 | NDC31HJ-180X | CER.CAPACITOR | 18P | | 50V |
| C349 | NCB31HK-103X | CER.CAPACITOR | 0.01 | | 50V |
| C350 | NCB31HK-103X | CER.CAPACITOR | 0.01 | | 50V |
| C351 | NCB31HK-103X | CER.CAPACITOR | 0.01 | | 50V |
| C352 | NCB31HK-103X | CER.CAPACITOR | 0.01 | | 50V |
| C353 | NCB31HK-103X | CER.CAPACITOR | 0.01 | | 50V |
| C354 | NCB31HK-103X | CER.CAPACITOR | 0.01 | | 50V |
| C355 | NCB31HK-103X | CER.CAPACITOR | 0.01 | | 50V |
| C356 | NCB31HK-103X | CER.CAPACITOR | 0.01 | | 50V |
| C357 | NCF31CZ-104X | CER.CAPACITOR | 0.1 | | 16V |
| C358 | NCF31CZ-104X | CER.CAPACITOR | 0.1 | | 16V |
| C359 | NCB31HK-103X | CER.CAPACITOR | 0.01 | | 50V |
| C360 | NEH90JM-476X | E.CAPACITOR | 47 | 6.3V | (D85E/D80E) |
| C361 | NEH90JM-476X | E.CAPACITOR | 47 | | 6.3V |
| C401 | NCB31HK-103X | CER.CAPACITOR | 0.01 | 50V | (D85E/D80E) |
| C402 | NCB31HK-103X | CER.CAPACITOR | 0.01 | 50V | (D85E/D80E) |
| C403 | NCB31HK-103X | CER.CAPACITOR | 0.01 | | 50V |
| C404 | NDC31HJ-270X | CER.CAPACITOR | 27P | | 50V |
| C405 | NDC31HJ-270X | CER.CAPACITOR | 27P | | 50V |
| C406 | NC831HK-103X | CER.CAPACITOR | 0.01 | | 50V |
| C407 | NCB31HK-103X | CER.CAPACITOR | 0.01 | | 50V |
| C408 | NCB31HK-103X | CER.CAPACITOR | 0.01 | 50V | (D85E/D80E) |
| C409 | NCB31HK-103X | CER.CAPACITOR | 0.01 | 50V | (D85E/D80E) |
| C410 | NC831HK-103X | CER.CAPACITOR | 0.01 | 50V | (D85E/D80E) |
| C411 | NCB31HK-103X | CER.CAPACITOR | 0.01 | 50V | (D85E/D80E) |
| C412 | NC831HK-103X | CER.CAPACITOR | 0.01 | | 50V |
| C413 | NCB31HK-103X | CER.CAPACITOR | 0.01 | | 50V |
| C414 | NCB31HK-103X | CER.CAPACITOR | 0.01 | | 50V |
| C415 | NCB31HK-103X | CER.CAPACITOR | 0.01 | | 50V |
| C416 | NC831HK-103X | CER.CAPACITOR | 0.01 | | 50V |
| C417 | NCB31HK-103X | CER.CAPACITOR | 0.01 | | 50V |
| C418 | NCB31HK-103X | CER.CAPACITOR | 0.01 | 50V | (D85E/D80E) |
| C419 | NC831HK-103X | CER.CAPACITOR | 0.01 | 50V | (D85E/D80E) |

| Symboi No. | Psrt No. | Psrt Nsms | Descriptinn | | |
|---|---|---|---|---|---|
| C420 | NCB31HK-103X | CER.CAPACITOR | 0.01 | 50V | (D85E/D80E) |
| C421 | NCB31HK-103X | CER.CAPACITOR | 0.01 | | 50V |
| C422 | NC831HK-103X | CER.CAPACITOR | 0.01 | | 50V |
| C423 | NCB31HK-103X | CER.CAPACITOR | 0.01 | | 50V |
| C424 | NCB31HK-103X | CER.CAPACITOR | 0.01 | | 50V |
| C425 | NC831HK-103X | CER.CAPACITOR | 0.01 | | 50V |
| L1 | NQL114K-100X | COIL | 10μH | | (D85E/D80E) |
| L2 | NOL024J-1R2X | COIL | 1.2mH | | (D85E/D80E) |
| L3 | NQL024J-1R2X | COIL | 1.2mH | | (D85E/D80E) |
| L4 | NOL114K-100X | COIL | 10μH | | (D85E/D80E) |
| L5 | NQL114K-100X | COIL | 10μH | | |
| L6 | NOL114K-100X | COIL | 10μH | | |
| L7 | NQL114K-100X | COIL | 10μH | | |
| L301 | NOL114K-101X | COIL | 100μH | | |
| L302 | NQL114K-101X | COIL | 100μH | | |
| LC1 | PGZ01972Z | LC FILTER | | | |
| LC2 | PGZ01972Z | LC FILTER | | | |
| LC301 | SSV3036-12R3Y | LC FILTER | | | |
| X1 | PGZ02143 | CRYSTAL | 49.5MHz | | (D85E/D80E) |
| X401 | PGZ02200-001 | CRYSTAL | 4.9152NHz | | |
| TH301 | NAD0001-103X | THERMISTOR | 10k | | |
| CN1 | PGZ02142-120 | CONNECTOR | 120PIN | | |
| CN2 | PGZ02142-100 | CONNECTOR | 100PIN | | |
| CN3 | PGZ02149-006Z | CONNECTOR | 6PIN | | (D50E) |
| TP1 | SCV1880-001 | TEST POINT | | | (D85E/D80E) |
| TP2 | SCV1880-001 | TEST POINT | | | (D85E/D80E) |
| TP3 | SCV1880-001 | TEST POINT | | | (D85E/D80E) |
| TP4 | SCV1880-001 | TEST POINT | | | (D85E/D80E) |
| TP5 | SCV1880-001 | TEST POINT | | | |
| TP6 | SCV1880-001 | TEST POINT | | | |
| TP7 | SCV1880-001 | TEST POINT | | | |
| TP8 | SCV1880-001 | TEST POINT | | | |
| TP9 | SCV1880-001 | TEST POINT | | | |
| TP10 | SCV1880-001 | TEST POINT | | | |
| TP11 | SCV1880-001 | TEST POINT | | | |
| TP12 | SCV1880-001 | TEST POINT | | | |
| TP13 | SCV1880-001 | TEST POINT | | | |
| TP14 | SCV1880-001 | TEST POINT | | | |
| TP15 | SCV1880-001 | TEST POINT | | | |
| TP16 | SCV1880-001 | TEST POINT | | | |
| TP17 | SCV1880-001 | TEST POINT | | | (D85E/D80E) |
| TP18 | SCV1880-001 | TEST POINT | | | (D85E/D80E) |
| TP19 | SCV1880-001 | TEST POINT | | | |
| TP20 | SCV1880-001 | TEST POINT | | | (D85E/D80E) |
| TP21 | SCV1880-001 | TEST POINT | | | |
| TP301 | SCV1880-001 | TEST POINT | | | (D85E/D80E) |
| TP302 | SCV1880-001 | TEST POINT | | | (D85E/D80E) |
| TP303 | SCV1880-001 | TEST POINT | | | (D85E/D80E) |
| TP304 | SCV1880-001 | TEST POINT | | | (D85E/D80E) |
| TP305 | SCV1880-001 | TEST POINT | | | (D85E/D80E) |
| TP306 | SCV1880-001 | TEST POINT | | | (D85E/D80E) |

[PV PROCESS]

| Symbol No. | Part No. | Part Name | Description |
|---|---|---|---|
| TP307 | SCV1880-001 | TEST POINT | (D85E/D80E) |
| TP308 | SCV1880-001 | TEST POINT | (D85E/D80E) |
| TP309 | SCV1880-001 | TEST POINT | |
| TP310 | SCV1880-001 | TEST POINT | |
| TP311 | SCV1880-001 | TEST POINT | |
| TP312 | SCV1880-001 | TEST POINT | |
| TP313 | SCV1880-001 | TEST POINT | |
| TP314 | SCV1880-001 | TEST POINT | |
| TP315 | SCV1880-001 | TEST POINT | |
| TP316 | SCV1880-001 | TEST POINT | |
| TP316 | SCV1880-001 | TEST POINT | (D85E/D80E) |

## 6.6 OUT MEM BOARD ASSEMBLY LIST [1][4]

**SLK1016-A0A** [1][4]□□□□□□□

| Symbol No. | Part No. | Part Name | Description |
|---|---|---|---|
| IC1 | M51957BFP-X | I.C.(M) | MITSUBISHI |
| IC2 | TD74BC541F-X | I.C.(M) | TOSHIBA |
| IC3 | DS90C032TM-X | I.C.(M) | NS |
| IC4 | DS90C032TM-X | I.C.(M) | NS |
| IC5 | DS90C032TM-X | I.C.(M) | NS |
| IC6 | TD74BC541F-X | I.C.(M) | TOSHIBA |
| IC7 | JCL0025 | I.C.(M) | JVC |
| IC8 | TD74BC541F-X | I.C.(M) | TOSHIBA |
| IC9 | TD74BC541F-X | I.C.(M) | TOSHIBA |
| IC10 | TD74BC541F-X | I.C.(M) | TOSHIBA |
| IC11 | UPD78054GC-2** | I.C.(M) | NEC |
| IC12 | UPC78L05T-W | I.C.(M) | NEC |
| IC13 | TC7W04F-X | I.C.(M) | TOSHIBA |
| IC14 | UPC4082G2-X | I.C.(M) | NEC |
| IC15 | TC4W53F-X | I.C.(M) | TOSHIBA |
| IC16 | UPC4082G2-X | I.C.(M) | NEC |
| IC17 | UPC40S2G2-X | I.C.(M) | NEC |
| IC18 | TC4W53F-X | I.C.(M) | TOSHIBA |
| IC19 | UPC4074G2-X | I.C.(M) | NEC |
| IC20 | UPC78L12T-W | I.C.(M) | NEC |
| IC21 | LM79L12ACM-X | I.C.(M) | NS |
| IC22 | TC7W04F-X | I.C.(M) | TOSHIBA |
| IC23 | UPC78L05T-W | I.C.(M) | NEC |
| IC24 | UPC78L12T-W | I.C.(M) | NEC |
| IC25 | 74ACT574SJ-X | I.C.(M) | NS |
| IC26 | 74ACT574SJ-X | I.C.(M) | NS |
| IC27 | CXD1177Q-X | I.C.(M) | SONY |
| IC28 | TC74HC0BAF-X | I.C.(M) | TOSHIBA |
| IC29 | TC7W04F-X | I.C.(M) | TOSHIBA |
| IC30 | UPC78L12T-W | I.C.(M) | NEC |
| IC31 | UPC78L05T-W | I.C.(M) | NEC |
| IC32 | CXD1171M-X | I.C.(M) | SONY |
| IC33 | 74ACT574SJ-X | I.C.(M) | NS |
| IC34 | 74ACT574SJ-X | I.C.(M) | NS |
| IC35 | CXD1177Q-X | I.C.(M) | SONY |
| IC36 | TC7W04F-X | I.C.(M) | TOSHIBA |
| IC37 | LM79L05ACM-X | I.C.(M) | NS |
| IC38 | LM79L05ACM-X | I.C.(M) | NS |
| IC39 | JCL0034 | I.C.(M) | JVC |
| IC40 | CXK48324Q | I.C.(M) | SONY |
| IC41 | CXK48324Q | I.C.(M) | SONY |
| IC42 | CXK48324Q | I.C.(M) | SONY |
| IC43 | CXK48324Q | I.C.(M) | SONY |
| IC44 | DS90C031TM-X | I.C.(M) | NS |
| IC45 | DS90C031TM-X | I.C.(M) | NS |
| IC46 | TD74BC541F-X | I.C.(M) | TOSHIBA |
| Q1 | 2SC2412K/QR/-X | TRANSISTOR | ROHM |
| Q2 | 2SA1037AK/QR/-X | TRANSISTOR | ROHM |
| Q3 | 2SC2412K/QR/-X | TRANSISTOR | ROHM |
| Q4 | 2SC2412K/QR/-X | TRANSISTOR | ROHM |
| Q5 | 2SA1037AK/QR/-X | TRANSISTOR | ROHM |
| Q6 | 2SC2412K/QR/-X | TRANSISTOR | ROHM |
| Q7 | 2SC2412K/QR/-X | TRANSISTOR | ROHM |
| Q8 | 2SA1037AK/QR/-X | TRANSISTOR | ROHM |
| Q9 | 2SC2412K/QR/-X | TRANSISTOR | ROHM |
| Q10 | 2SC2412K/QR/-X | TRANSISTOR | ROHM |
| Q11 | 2SA1037AK/QR/-X | TRANSISTOR | ROHM |
| Q12 | 2SC2412K/QR/-X | TRANSISTOR | ROHM |

The symbol ** refers to the ROM version. Place your purchase order filling the number indicated on the IC in **.

| Symbol No. | Part No. | Part Name | Deeoription | |
|---|---|---|---|---|
| Q13 | 2SC2412K/QR/-X | TRANSISTOR | ROHM | |
| Q14 | 2SA1037AK/QR/-X | TRANSISTOR | ROHM | |
| O15 | 2SC2412K/QR/-X | TRANSISTOR | ROHM | |
| D100 | DAP202K-X | DIODE | ROHM | |
| R100 | NRSA02J-101X | M.G.RESISTOR | 100 | 1/10W |
| R101 | NRSA02J-101X | M.G.RESISTOR | 100 | 1/10W |
| R102 | NRSA02J-101X | M.G.RESISTOR | 100 | 1/10W |
| R103 | NRSA02J-101X | M.G.RESISTOR | 100 | 1/10W |
| R104 | NRSA02J-101X | M.G.RESISTOR | 100 | 1/10W |
| R105 | NRSA02J-101X | M.G.RESISTOR | 100 | 1/10W |
| R106 | NRSA02J-101X | M.G.RESISTOR | 100 | 1/10W |
| R107 | NRSA02J-101X | M.G.RESISTOR | 100 | 1/10W |
| R108 | NRSA02J-101X | M.G.RESISTOR | 100 | 1/10W |
| R110 | NRSA02J-101X | M.G.RESISTOR | 100 | 1/10W |
| R111 | NRSA02J-101X | M.G.RESISTOR | 100 | 1/10W |
| R112 | NRSA02J-101X | M.G.RESISTOR | 100 | 1/10W |
| R113 | NRSA02J-101X | M.G.RESISTOR | 100 | 1/10W |
| R114 | NRSA02J-101X | M.G.RESISTOR | 100 | 1/10W |
| R115 | NRSA02J-101X | M.G.RESISTOR | 100 | 1/10W |
| R117 | NRSA02J-101X | M.G.RESISTOR | 100 | 1/10W |
| R118 | NRSA02J-101X | M.G.RESISTOR | 100 | 1/10W |
| R119 | NRSA02J-101X | M.G.RESISTOR | 100 | 1/10W |
| R120 | NRSA02J-101X | M.G.RESISTOR | 100 | 1/10W |
| R121 | NRSA02J-101X | M.G.RESISTOR | 100 | 1/10W |
| R122 | NRSA02J-101X | M.G.RESISTOR | 100 | 1/10W |
| R123 | NRSA02J-103X | M.G.RESISTOR | 10k | 1/10W |
| R124 | NRSA02J-332X | M.G.RESISTOR | 3.3k | 1/10W |
| R125 | NRSA02J-122X | M.G.RESISTOR | 1.2k | 1/10W |
| R126 | NRSA02J-105X | M.G.RESISTOR | 1M | 1/10W |
| R127 | NRSA02J-103X | M.G.RESISTOR | 10k | 1/10W |
| R128 | NRSA02J-103X | M.G.RESISTOR | 10k | 1/10W |
| R129 | NRSA02J-103X | M.G.RESISTOR | 10k | 1/10W |
| R130 | NRSA02J-103X | M.G.RESISTOR | 10k | 1/10W |
| R131 | NRSA02J-103X | M.G.RESISTOR | 10k | 1/10W |
| R132 | NRSA02J-103X | M.G.RESISTOR | 10k | 1/10W |
| R133 | NRSA02J-103X | M.G.RESISTOR | 10k | 1/10W |
| R134 | NRSA02J-103X | M.G.RESISTOR | 10k | 1/10W |
| R135 | NRSA02J-103X | M.G.RESISTOR | 10k | 1/10W |
| R136 | NRSA02J-103X | M.G.RESISTOR | 10k | 1/10W |
| R137 | NRVA02D-153X | C.M.F.RESISTOR | 15k | 1/10W |
| R138 | NRVA02D-122X | C.M.F.RESISTOR | 1.2k | 1/10W |
| R139 | NRSA02J-102X | M.G.RESISTOR | 1k | 1/10W |
| R140 | NRSA02J-102X | M.G.RESISTOR | 1k | 1/10W |
| R141 | NRSA02J-103X | M.G.RESISTOR | 10k | 1/10W |
| R142 | NRSA02J-102X | M.G.RESISTOR | 1k | 1/10W |
| R143 | NRSA02J-102X | M.G.RESISTOR | 1k | 1/10W |
| R144 | NRSA02J-102X | M.G.RESISTOR | 1k | 1/10W |
| R145 | NRVA02D-103X | C.M.F.RESISTOR | 10k | 1/10W |
| R146 | NRVA02D-103X | C.M.F.RESISTOR | 10k | 1/10W |
| R147 | NRVA02D-103X | C.M.F.RESISTOR | 10k | 1/10W |
| R148 | NRVA02D-392X | C.M.F.RESISTOR | 3.9k | 1/10W |
| R149 | NRVA02D-123X | C.M.F.RESISTOR | 12k | 1/10W |
| R150 | NRVA02D-223X | C.M.F.RESISTOR | 22k | 1/10W |
| R151 | NRSA02J-562X | M.G.RESISTOR | 5.6k | 1/10W |
| R152 | NRVA02D-472X | C.M.F.RESISTOR | 4.7k | 1/10W |
| R153 | NRSA02J-473X | M.G.RESISTOR | 47k | 1/10W |

| Symbol No. | Part No. | Part Name | Desoription | |
|---|---|---|---|---|
| R154 | NRVA02D-103X | C.M.F.RESISTOR | 10k | 1/10W |
| R155 | NRVA02D-103X | C.M.F.RESISTOR | 10k | 1/10W |
| R156 | NRVA02D-123X | C.M.F.RESISTOR | 12k | 1/10W |
| R157 | NRVA02D-512X | C.M.F.RESISTOR | 5.1k | 1/10W |
| R158 | NRVA02D-512X | C.M.F.RESISTOR | 5.1k | 1/10W |
| R159 | NRVA02D-912X | C.M.F.RESISTOR | 9.1k | 1/10W |
| R160 | NRSA02J-332X | M.G.RESISTOR | 3.3k | 1/10W |
| R161 | NRSA02J-103X | M.G.RESISTOR | 10k | 1/10W |
| R162 | NRSA02J-103X | M.G.RESISTOR | 10k | 1/10W |
| R163 | NRSA02J-104X | M.G.RESISTOR | 100k | 1/10W |
| R164 | NRVA02D-472X | C.M.F.RESISTOR | 4.7k | 1/10W |
| R165 | NRVA02D-512X | C.M.F.RESISTOR | 5.1k | 1/10W |
| R166 | NRVA02D-912X | C.M.F.RESISTOR | 9.1k | 1/10W |
| R167 | NRSA02J-332X | M.G.RESISTOR | 3.3k | 1/10W |
| R168 | NRVA02D-472X | C.M.F.RESISTOR | 4.7k | 1/10W |
| R169 | NRVA02D-101X | C.M.F.RESISTOR | 100 | 1/10W |
| R170 | NRVA02D-101X | C.M.F.RESISTOR | 100 | 1/10W |
| R171 | NRSA02J-332X | M.G.RESISTOR | 3.3k | 1/10W |
| R172 | NRVA02D-201X | C.M.F.RESISTOR | 200 | 1/10W |
| R173 | NRVA02D-201X | C.M.F.RESISTOR | 200 | 1/10W |
| R174 | NRVA02D-103X | C.M.F.RESISTOR | 10k | 1/10W |
| R175 | NRVA02D-472X | C.M.F.RESISTOR | 4.7k | 1/10W |
| R176 | NRSA02J-333X | M.G.RESISTOR | 33k | 1/10W |
| R177 | NRSA02J-563X | M.G.RESISTOR | 56k | 1/10W |
| R178 | NRSA02J-222X | M.G.RESISTOR | 2.2k | 1/10W |
| R179 | NRVA02D-101X | C.M.F.RESISTOR | 100 | 1/10W |
| R180 | NRSA02J-152X | M.G.RESISTOR | 1.5k | 1/10W |
| R181 | NRSA02J-152X | M.G.RESISTOR | 1.5k | 1/10W |
| R182 | NRVA02D-101X | C.M.F.RESISTOR | 100 | 1/10W |
| R183 | NRSA02J-333X | M.G.RESISTOR | 33k | 1/10W |
| R184 | NRSA02J-563X | M.G.RESISTOR | 56k | 1/10W |
| R185 | NRSA02J-222X | M.G.RESISTOR | 2.2k | 1/10W |
| R186 | NRVA02D-101X | C.M.F.RESISTOR | 100 | 1/10W |
| R187 | NRSA02J-152X | M.G.RESISTOR | 1.5k | 1/10W |
| R188 | NRSA02J-152X | M.G.RESISTOR | 1.5k | 1/10W |
| R189 | NRVA02D-101X | C.M.F.RESISTOR | 100 | 1/10W |
| R190 | NRSA02J-471X | M.G.RESISTOR | 470 | 1/10W |
| R191 | NRSA02J-332X | M.G.RESISTOR | 3.3k | 1/10W |
| R192 | NRVA02D-201X | C.M.F.RESISTOR | 200 | 1/10W |
| R193 | NRVA02D-103X | C.M.F.RESISTOR | 10k | 1/10W |
| R194 | NRVA02D-472X | C.M.F.RESISTOR | 4.7k | 1/10W |
| R195 | NRSA02J-222X | M.G.RESISTOR | 2.2k | 1/10W |
| R196 | NRVA02D-101X | C.M.F.RESISTOR | 100 | 1/10W |
| R197 | NRSA02J-152X | M.G.RESISTOR | 1.5k | 1/10W |
| R198 | NRSA02J-152X | M.G.RESISTOR | 1.5k | 1/10W |
| R199 | NRVA02D-101X | C.M.F.RESISTOR | 100 | 1/10W |
| R200 | NRVA02D-101X | C.M.F.RESISTOR | 100 | 1/10W |
| R201 | NRVA02D-101X | C.M.F.RESISTOR | 100 | 1/10W |
| R202 | NRSA02J-332X | M.G.RESISTOR | 3.3k | 1/10W |
| R203 | NRVA02D-201X | C.M.F.RESISTOR | 200 | 1/10W |
| R204 | NRVA02D-201X | C.M.F.RESISTOR | 200 | 1/10W |
| R205 | NRVA02D-103X | C.M.F.RESISTOR | 10k | 1/10W |
| R206 | NRVA02D-472X | C.M.F.RESISTOR | 4.7k | 1/10W |
| R207 | NRSA02J-333X | M.G.RESISTOR | 33k | 1/10W |
| R208 | NRSA02J-563X | M.G.RESISTOR | 55k | 1/10W |
| R209 | NRSA02J-222X | M.G.RESISTOR | 2.2k | 1/10W |
| R210 | NRVA02D-101X | C.M.F.RESISTOR | 100 | 1/10W |
| R211 | NRSA02J-152X | M.G.RESISTOR | 1.5k | 1/10W |
| R212 | NRSA02J-152X | M.G.RESISTOR | 1.5k | 1/10W |

[OUT MEM]

| Symbol No. | Part No. | Part Nama | Dascription | |
|---|---|---|---|---|
| R213 | NRVA02D-101X | C.M.F.RESISTOR | 100 | 1/10W |
| R214 | NRSA02J-333X | M.G.RESISTOR | 33k | 1/10W |
| R215 | NRSA02J-563X | M.G.RESISTOR | 56k | 1/10W |
| R216 | NRSA02J-222X | M.G.RESISTOR | 2.2k | 1/10W |
| R217 | NRVA02D-101X | C.M.F.RESISTOR | 100 | 1/10W |
| R218 | NRSA02J-152X | M.G.RESISTOR | 1.5k | 1/10W |
| R219 | NRSA02J-152X | M.G.RESISTOR | 1.5k | 1/10W |
| R220 | NRVA02D-101X | C.M.F.RESISTOR | 100 | 1/10W |
| R221 | NRVA02D-101X | C.M.F.RESISTOR | 100 | 1/10W |
| R226 | NRVA02D-101X | C.M.F.RESISTOR | 100 | 1/10W |
| R229 | NRSA02J-103X | M.G.RESISTOR | 10k | 1/10W |
| R230 | NRSA02J-103X | M.G.RESISTOR | 10k | 1/10W |
| R231 | NRSA02J-103X | M.G.RESISTOR | 10k | 1/10W |
| R232 | NRSA02J-103X | M.G.RESISTOR | 10k | 1/10W |
| R233 | NRSA02J-103X | M.G.RESISTOR | 10k | 1/10W |
| R234 | NRSA02J-103X | M.G.RESISTOR | 10k | 1/10W |
| R235 | NRSA02J-103X | M.G.RESISTOR | 10k | 1/10W |
| R236 | NRVA02D-101X | C.M.F.RESISTOR | 100 | 1/10W |
| R238 | NRVA02D-101X | C.M.F.RESISTOR | 100 | 1/10W |
| R239 | NRVA02D-101X | C.M.F.RESISTOR | 100 | 1/10W |
| R240 | NRVA02D-101X | C.M.F.RESISTOR | 100 | 1/10W |
| R241 | NRVA02D-101X | C.M.F.RESISTOR | 100 | 1/10W |
| R242 | NRSA02J-0R0X | M.G.RESISTOR | 0 | 1/10W |
| R243 | NRSA02J-470X | M.G.RESISTOR | 47 | 1/10W |
| R244 | NRSA02J-0R0X | M.G.RESISTOR | 0 | 1/10W |
| R300 | NRSA02J-103X | M.G.RESISTOR | 10k | 1/10W |
| R301 | NRSA02J-103X | M.G.RESISTOR | 10k | 1/10W |
| R303 | NRVA02D-101X | C.M.F.RESISTOR | 100 | 1/10W |
| R304 | NRVA02D-101X | C.M.F.RESISTOR | 100 | 1/10W |
| VR1 | NVP1415-103X | TRIM.RESISTOR | 10k, | C LEV |
| RA1 | NRZ0029-101X | RESISTOR ARRAY | 100 | |
| RA2 | NRZ0029-101X | RESISTOR ARRAY | 100 | |
| RA3 | NRZ0029-101X | RESISTOR ARRAY | 100 | |
| RA4 | NRZ0029-103X | R NETWORK | 10k | |
| RA5 | NRZ0029-101X | RESISTOR ARRAY | 100 | |
| RA6 | NRZ0029-103X | R NETWORK | 10k | |
| RA8 | NRZ0029-101X | RESISTOR ARRAY | 100 | |
| RA9 | NRZ0029-103X | R NETWORK | 10k | |
| RA10 | NRZ0029-103X | R NETWORK | 10k | |
| RA11 | NRZ0029-101X | RESISTOR ARRAY | 100 | |
| RA12 | NRZ0029-101X | RESISTOR ARRAY | 100 | |
| RA13 | NRZ0029-101X | RESISTOR ARRAY | 100 | |
| RA14 | NRZ0029-101X | RESISTOR ARRAY | 100 | |
| RA15 | NRZ0029-101X | RESISTOR ARRAY | 100 | |
| RA16 | NRZ0029-101X | RESISTOR ARRAY | 100 | |
| RA200 | NRZ0029-101X | RESISTOR ARRAY | 100 | |
| RA201 | NRZ0029-101X | RESISTOR ARRAY | 100 | |
| RA202 | NRZ0029-101X | RESISTOR ARRAY | 100 | |
| C100 | NCF21HZ-103X | CER.CAPACITOR | 0.01 | 50V |
| C101 | NCF21HZ-103X | CER.CAPACITOR | 0.01 | 50V |
| C102 | NEH91CM-476X | E.CAPACITOR | 47 | 16V |
| C103 | NCF21HZ-103X | CER.CAPACITOR | 0.01 | 50V |
| C104 | NCF21HZ-103X | CER.CAPACITOR | 0.01 | 50V |
| C105 | NCF21HZ-103X | CER.CAPACITOR | 0.01 | 50V |
| C106 | NCF21HZ-103X | CER.CAPACITOR | 0.01 | 50V |
| C107 | NCF21HZ-103X | CER.CAPACITOR | 0.01 | 50V |

| Symbol No. | Part Nc. | Part Nsms | Dscription | |
|---|---|---|---|---|
| C108 | NEH91CM-476X | E.CAPACITOR | 47 | 16V |
| C109 | NCF21HZ-103X | CER.CAPACITOR | 0.01 | 50V |
| C110 | NCF21HZ-103X | CER.CAPACITOR | 0.01 | 50V |
| C111 | NCB21HK-102X | CER.CAPACITOR | 1000P | 50V |
| C112 | NCF21HZ-103X | CER.CAPACITOR | 0.01 | 50V |
| C113 | NEH91CM-106X | E.CAPACITOR | 10 | 16V |
| C114 | NCF21HZ-103X | CER.CAPACITOR | 0.01 | 50V |
| C115 | NCF21HZ-103X | CER.CAPACITOR | 0.01 | 50V |
| C116 | NCF21HZ-103X | CER.CAPACITOR | 0.01 | 50V |
| C117 | NCF21HZ-103X | CER.CAPACITOR | 0.01 | 50V |
| C118 | NCF21HZ-103X | CER.CAPACITOR | 0.01 | 50V |
| C119 | NCF21HZ-103X | CER.CAPACITOR | 0.01 | 50V |
| C120 | NCF21HZ-103X | CER.CAPACITOR | 0.01 | 50V |
| C121 | NCF21HZ-103X | CER.CAPACITOR | 0.01 | 50V |
| C122 | NCF21HZ-103X | CER.CAPACITOR | 0.01 | 50V |
| C123 | NEH91CM-106X | E.CAPACITOR | 10 | 16V |
| C124 | NCF21HZ-103X | CER.CAPACITOR | 0.01 | 50V |
| C125 | NCF21HZ-103X | CER.CAPACITOR | 0.01 | 50V |
| C126 | NEH91CM-106X | E.CAPACITOR | 10 | 16V |
| C127 | NCS21HJ-330X | CER.CAPACITOR | 33P | 50V |
| C128 | NCS21HJ-330X | CER.CAPACITOR | 33P | 50V |
| C129 | NEH91CM-476X | E.CAPACITOR | 47 | 16V |
| C130 | NCF21HZ-103X | CER.CAPACITOR | 0.01 | 50V |
| C131 | NEH91CM-476X | E.CAPACITOR | 47 | 16V |
| C132 | NCF21HZ-103X | CER.CAPACITOR | 0.01 | 50V |
| C133 | NCF21HZ-103X | CER.CAPACITOR | 0.01 | 50V |
| C134 | NEH91CM-106X | E.CAPACITOR | 10 | 16V |
| C135 | NCF21HZ-103X | CER.CAPACITOR | 0.01 | 50V |
| C136 | NCF21HZ-103X | CER.CAPACITOR | 0.01 | 50V |
| C137 | NEH91CM-476X | E.CAPACITOR | 47 | 16V |
| C138 | NCF21HZ-103X | CER.CAPACITOR | 0.01 | 50V |
| C139 | NCF21HZ-103X | CER.CAPACITOR | 0.01 | 50V |
| C140 | NCF21HZ-103X | CER.CAPACITOR | 0.01 | 50V |
| C141 | NCB21HK-222X | CER.CAPACITOR | 2200P | 50V |
| C142 | NCB21HK-222X | CER.CAPACITOR | 2200P | 50V |
| C143 | NCB21HK-222X | CER.CAPACITOR | 2200P | 50V |
| C145 | NCF21HZ-103X | CER.CAPACITOR | 0.01 | 50V |
| C146 | NCF21EZ-104X | CER.CAPACITOR | 0.1 | 25V |
| C147 | NCF21EZ-104X | CER.CAPACITOR | 0.1 | 25V |
| C148 | NCF21EZ-104X | CER.CAPACITOR | 0.1 | 25V |
| C149 | NCF21EZ-104X | CER.CAPACITOR | 0.1 | 25V |
| C150 | NCF21EZ-104X | CER.CAPACITOR | 0.1 | 25V |
| C151 | NCF21EZ-104X | CER.CAPACITOR | 0.1 | 25V |
| C152 | NCF21EZ-104X | CER.CAPACITOR | 0.1 | 25V |
| C153 | NBE41AM-475X | TAN.CAPACITOR | 4.7 | 10V |
| C154 | NCF21HZ-103X | CER.CAPACITOR | 0.01 | 50V |
| C155 | NCF21EZ-104X | CER.CAPACITOR | 0.1 | 25V |
| C156 | NCF21EZ-104X | CER.CAPACITOR | 0.1 | 25V |
| C157 | NCF21EZ-104X | CER.CAPACITOR | 0.1 | 25V |
| C158 | NCF21EZ-104X | CER.CAPACITOR | 0.1 | 25V |
| C159 | NBE41AM-475X | TAN.CAPACITOR | 4.7 | 10V |
| C160 | NBE41AM-475X | TAN.CAPACITOR | 4.7 | 10V |
| C161 | NCF21HZ-103X | CER.CAPACITOR | 0.01 | 50V |
| C162 | NEH91CM-476X | E.CAPACITOR | 47 | 16V |
| C163 | NCF21HZ-103X | CER.CAPACITOR | 0.01 | 50V |
| C164 | NCF21HZ-103X | CER.CAPACITOR | 0.01 | 50V |
| C165 | NCF21HZ-103X | CER.CAPACITOR | 0.01 | 50V |
| C166 | NEH91CM-476X | E.CAPACITOR | 47 | 16V |
| C167 | NCF21HZ-103X | CER.CAPACITOR | 0.01 | 50V |

| Symbol No. | Part No. | Part Name | Description | |
|---|---|---|---|---|
| C168 | NCF21HZ-103X | CER.CAPACITOR | 0.01 | 50V |
| C169 | NCF21HZ-103X | CER.CAPACITOR | 0.01 | 50V |
| C171 | NCF21HZ-103X | CER.CAPACITOR | 0.01 | 50V |
| C172 | NCF21HZ-103X | CER.CAPACITOR | 0.01 | 50V |
| C173 | NCF21HZ-103X | CER.CAPACITOR | 0.01 | 50V |
| C174 | NCF21HZ-103X | CER.CAPACITOR | 0.01 | 50V |
| C175 | NEH91CM-476X | E.CAPACITOR | 47 | 16V |
| C176 | NCF21HZ-103X | CER.CAPACITOR | 0.01 | 50V |
| C177 | NEH91CM-476X | E.CAPACITOR | 47 | 16V |
| C178 | NCF21HZ-103X | CER.CAPACITOR | 0.01 | 50V |
| C179 | NCF21HZ-103X | CER.CAPACITOR | 0.01 | 50V |
| C180 | NEH91CM-476X | E.CAPACITOR | 47 | 16V |
| C181 | NCF21HZ-103X | CER.CAPACITOR | 0.01 | 50V |
| C182 | NCF21HZ-103X | CER.CAPACITOR | 0.01 | 50V |
| C183 | NCF21HZ-103X | CER.CAPACITOR | 0.01 | 50V |
| C184 | NCF21HZ-103X | CER.CAPACITOR | 0.01 | 50V |
| C185 | NCF21HZ-103X | CER.CAPACITOR | 0.01 | 50V |
| C186 | NCF21HZ-103X | CER.CAPACITOR | 0.01 | 50V |
| C187 | NCF21EZ-104X | CER.CAPACITOR | 0.1 | 25V |
| C188 | NEH71AM-107X | E.CAPACITOR | 100 | 10V |
| C189 | NCS21HJ-470X | CER.CAPACITOR | 47P | 50V |
| C190 | NEH71AM-107X | E.CAPACITOR | 100 | 10V |
| C191 | NEH71AM-107X | E.CAPACITOR | 100 | 10V |
| C192 | NCS21HJ-470X | CER.CAPACITOR | 47P | 50V |
| C193 | NEH71AM-107X | E.CAPACITOR | 100 | 10V |
| C194 | NEH91CM-476X | E.CAPACITOR | 47 | 16V |
| C195 | NCF21HZ-103X | CER.CAPACITOR | 0.01 | 50V |
| C196 | NEH91CM-476X | E.CAPACITOR | 47 | 16V |
| C197 | NCF21HZ-103X | CER.CAPACITOR | 0.01 | 50V |
| C198 | NCF21HZ-103X | CER.CAPACITOR | 0.01 | 50V |
| C200 | NCF21HZ-103X | CER.CAPACITOR | 0.01 | 50V |
| C201 | NCF21HZ-103X | CER.CAPACITOR | 0.01 | 50V |
| C202 | NCF21HZ-103X | CER.CAPACITOR | 0.01 | 50V |
| C203 | NEH91CM-476X | E.CAPACITOR | 47 | 16V |
| C204 | NCF21HZ-103X | CER.CAPACITOR | 0.01 | 50V |
| C205 | NEH91CM-476X | E.CAPACITOR | 47 | 16V |
| C206 | NCF21HZ-103X | CER.CAPACITOR | 0.01 | 50V |
| C207 | NCF21HZ-103X | CER.CAPACITOR | 0.01 | 50V |
| C208 | NEH91CM-476X | E.CAPACITOR | 47 | 16V |
| C209 | NCF21HZ-103X | CER.CAPACITOR | 0.01 | 50V |
| C210 | NCF21HZ-103X | CER.CAPACITOR | 0.01 | 50V |
| C211 | NCF21HZ-103X | CER.CAPACITOR | 0.01 | 50V |
| C212 | NCF21HZ-103X | CER.CAPACITOR | 0.01 | 50V |
| C213 | NCF21HZ-103X | CER.CAPACITOR | 0.01 | 50V |
| C214 | NEH91CM-476X | E.CAPACITOR | 47 | 16V |
| C215 | NCF21HZ-103X | CER.CAPACITOR | 0.01 | 50V |
| C216 | NCF21HZ-103X | CER.CAPACITOR | 0.01 | 50V |
| C217 | NCS21HJ-150X | CER.CAPACITOR | 15P | 50V |
| C218 | NEH71AM-107X | E.CAPACITOR | 100 | 10V |
| C219 | NCF21HZ-103X | CER.CAPACITOR | 0.01 | 50V |
| C220 | NCF21EZ-104X | CER.CAPACITOR | 0.1 | 25V |
| C221 | NEH71AM-107X | E.CAPACITOR | 100 | 10V |
| C222 | NCS21HJ-470X | CER.CAPACITOR | 47P | 50V |
| C223 | NEH71AM-107X | E.CAPACITOR | 100 | 10V |
| C224 | NEH71AM-107X | E.CAPACITOR | 100 | 10V |
| C225 | NCS21HJ-470X | CER.CAPACITOR | 47P | 50V |
| C226 | NEH71AM-107X | E.CAPACITOR | 100 | 10V |
| C227 | NEH91CM-476X | E.CAPACITOR | 47 | 16V |
| C228 | NCF21HZ-103X | CER.CAPACITOR | 0.01 | 50V |

| Symbol No. | Part No. | Part Name | Description | |
|---|---|---|---|---|
| C229 | NEH91CM-476X | E.CAPACITOR | 47 | 16V |
| C230 | NCF21HZ-103X | CER.CAPACITOR | 0.01 | 50V |
| C231 | NCF21EZ-104X | CER.CAPACITOR | 0.1 | 25V |
| C300 | NCF21HZ-103X | CER.CAPACITOR | 0.01 | 50V |
| C301 | NEH91CM-106X | E.CAPACITOR | 10 | 16V |
| C302 | NEH91CM-106X | E.CAPACITOR | 10 | 16V |
| C303 | NCF21HZ-103X | CER.CAPACITOR | 0.01 | 50V |
| C304 | NCF21HZ-103X | CER.CAPACITOR | 0.01 | 50V |
| C305 | NCF21HZ-103X | CER.CAPACITOR | 0.01 | 50V |
| C306 | NCF21HZ-103X | CER.CAPACITOR | 0.01 | 50V |
| C307 | NCF21HZ-103X | CER.CAPACITOR | 0.01 | 50V |
| C308 | NCF21HZ-103X | CER.CAPACITOR | 0.01 | 50V |
| C309 | NCF21HZ-103X | CER.CAPACITOR | 0.01 | 50V |
| C310 | NEH91CM-106X | E.CAPACITOR | 10 | 16V |
| C311 | NEH91CM-106X | E.CAPACITOR | 10 | 16V |
| C312 | NCF21HZ-103X | CER.CAPACITOR | 0.01 | 50V |
| C313 | NCF21HZ-103X | CER.CAPACITOR | 0.01 | 50V |
| C314 | NEH91CM-106X | E.CAPACITOR | 10 | 16V |
| C315 | NEH91CM-106X | E.CAPACITOR | 10 | 16V |
| C316 | NCF21HZ-103X | CER.CAPACITOR | 0.01 | 50V |
| C317 | NCF21HZ-103X | CER.CAPACITOR | 0.01 | 50V |
| C318 | NEH91CM-106X | E.CAPACITOR | 10 | 16V |
| C319 | NEH91CM-106X | E.CAPACITOR | 10 | 16V |
| C320 | NCF21HZ-103X | CER.CAPACITOR | 0.01 | 50V |
| C321 | NCF21HZ-103X | CER.CAPACITOR | 0.01 | 50V |
| C322 | NEH91CM-106X | E.CAPACITOR | 10 | 16V |
| C323 | NEH91CM-106X | E.CAPACITOR | 10 | 16V |
| C324 | NCF21HZ-103X | CER.CAPACITOR | 0.01 | 50V |
| C325 | NCF21HZ-103X | CER.CAPACITOR | 0.01 | 50V |
| C326 | NEH91CM-476X | E.CAPACITOR | 47 | 16V |
| C327 | NCF21HZ-103X | CER.CAPACITOR | 0.01 | 50V |
| C328 | NCF21HZ-103X | CER.CAPACITOR | 0.01 | 50V |
| C329 | NCF21HZ-103X | CER.CAPACITOR | 0.01 | 50V |
| C330 | NEH91CM-476X | E.CAPACITOR | 47 | 16V |
| C331 | NCF21HZ-103X | CER.CAPACITOR | 0.01 | 50V |
| C332 | NEH91CM-476X | E.CAPACITOR | 47 | 16V |
| C333 | NCF21HZ-103X | CER.CAPACITOR | 0.01 | 50V |
| C334 | NEH71EM-476X | E.CAPACITOR | 47 | 25V |
| C335 | NCF21HZ-103X | CER.CAPACITOR | 0.01 | 50V |
| C336 | NEH71EM-476X | E.CAPACITOR | 47 | 25V |
| C337 | NCF21HZ-103X | CER.CAPACITOR | 0.01 | 50V |
| C338 | NEH91CM-476X | E.CAPACITOR | 47 | 16V |
| C339 | NCF21HZ-103X | CER.CAPACITOR | 0.01 | 50V |
| C340 | NEH71AM-107X | E.CAPACITOR | 100 | 10V |
| C341 | NCF21HZ-103X | CER.CAPACITOR | 0.01 | 50V |
| C342 | NEH71AM-107X | E.CAPACITOR | 100 | 10V |
| C343 | NCF21HZ-103X | CER.CAPACITOR | 0.01 | 50V |
| C344 | NCF21HZ-103X | CER.CAPACITOR | 0.01 | 50V |
| L1 | NQL124K-8R2X | COIL | 8.2mH | |
| L2 | NQL124M-3R9X | COIL | 3.9mH | |
| L3 | NOL124M-3R9X | COIL | 3.9mH | |
| L4 | NOL124M-3R9X | COIL | 3.9mH | |
| L5 | NOL124M-3R9X | COIL | 3.9mH | |
| X1 | PGZ02200-001 | CRYSTAL | 4.9152MHz | |

[OUT MEM]

| Symbol No. | Part No. | Part Nama | Dascription |
|---|---|---|---|
| S1 | SCV1919-004 | DIP SWITCH | FOR ADJUSTMENTS |
| CN1 | PGZ02142-120 | CONNECTOR | 120PIN |
| CN2 | PGZ02142-100 | CONNECTOR | 100PIN |
| TP1 | SSV1096-001 | TEST POINT | |
| TP2 | SSV1096-001 | TEST POINT | |
| TP3 | SSV1096-001 | TEST POINT | |
| TP4 | SSV1096-001 | TEST POINT | |
| TP5 | SSV1096-001 | TEST POINT | |
| TP6 | SSV1096-001 | TEST POINT | |
| TP7 | SSV1096-001 | TEST POINT | |
| TP8 | SSV1096-001 | TEST POINT | |
| TP9 | SSV1096-001 | TEST POINT | |
| TP10 | SSV1096-001 | TEST POINT | |
| TP11 | SSV1096-001 | TEST POINT | |
| K100 | PGZ01693-009Z | FERRITE BEADS | |
| K101 | PGZ01693-009Z | FERRITE BEADS | |
| K102 | PGZ01693-009Z | FERRITE BEADS | |
| K103 | PGZ01693-009Z | FERRITE BEADS | |
| K104 | PGZ01693-009Z | FERRITE BEADS | |
| K105 | PGZ01693-009Z | FERRITE BEADS | |
| K106 | PGZ01693-009Z | FERRITE BEADS | |
| K107 | PGZ01693-009Z | FERRITE BEADS | |
| K108 | PGZ01693-009Z | FERRITE BEADS | |
| K109 | PGZ01693-009Z | FERRITE BEADS | |
| K110 | PGZ01693-009Z | FERRITE BEADS | |
| K111 | PGZ01693-009Z | FERRITE BEADS | |
| K112 | PGZ01693-009Z | FERRITE BEADS | |
| K113 | PGZ01693-009Z | FERRITE BEADS | |
| K114 | PGZ01693-009Z | FERRITE BEADS | |
| K115 | PGZ01693-009Z | FERRITE BEADS | |
| K116 | PGZ01693-009Z | FERRITE BEADS | |
| K117 | PGZ01693-009Z | FERRITE BEADS | |
| K11B | PGZ01693-009Z | FERRITE BEADS | |
| K119 | PGZ01693-009Z | FERRITE BEADS | |
| K120 | PGZ01693-009Z | FERRITE BEADS | |
| K200 | PGZ01693-009Z | FERRITE BEADS | |
| K201 | PGZ01693-009Z | FERRITE BEADS | |
| K202 | PGZ01693-009Z | FERRITE BEADS | |
| K203 | PGZ01693-009Z | FERRITE BEADS | |
| K204 | PGZ01693-009Z | FERRITE BEADS | |
| K205 | PGZ01693-009Z | FERRITE BEADS | |
| K206 | PGZ01693-009Z | FERRITE BEADS | |
| TB1 | PGZ02228 | EARTH LUG | |
| TB2 | PGZ02228 | EARTH LUG | |
| TB3 | PGZ0222B | EARTH LUG | |
| TB4 | PGZ02228 | EARTH LUG | |

## 5.7 ANA IN BOARD ASSEMBLY LIST [1][5]

**SLK102S-E2A (BR-DS5E/DS0E)** [1][5]□□□□□□□

| Symbol No. | Part No. | Part Nams | Dscription |
|---|---|---|---|
| IC1 | UPC78L12T-W | I.C.(M) | NEC |
| IC2 | MM1111XF-W | I.C.(M) | MITUMI |
| IC3 | MM1111XF-W | I.C.(M) | MITUMI |
| IC4 | MM1111XF-W | I.C.(M) | MITUMI |
| IC5 | UPC78L05T-X | I.C.(M) | NEC |
| IC6 | NJM79L05UA-X | I.C.(M) | JRC |
| IC7 | LM6361M-X | I.C.(M) | TEXAS |
| IC8 | TC74VHC221AF-X | I.C.(M) | TOSHIBA |
| IC9 | UPC78L05T-X | I.C.(M) | NEC |
| IC10 | CXD2024AO | I.C.(M) | SONY |
| IC11 | UPC78L12T-W | I.C.(M) | NEC |
| IC12 | NJM79L05UA-X | I.C.(M) | JRC |
| IC13 | MM1111XF-W | I.C.(M) | MITUMI |
| IC14 | TC4W53F-X | I.C.(M) | TOSHIBA |
| IC15 | UPC78L12T-W | I.C.(M) | NEC |
| IC16 | MM1111XF-W | I.C.(M) | MITUMI |
| IC18 | M51279FP-X | I.C.(M) | MITSUBISHI |
| IC19 | TC7WU04F-X | I.C.(M) | TOSHIBA |
| IC20 | UPC78L05T-X | I.C.(M) | NEC |
| IC21 | UPC311G2-X | I.C.(M) | NEC |
| IC22 | TC74HC4053AF-X | I.C.(M) | TOSHIBA |
| IC23 | MC14577CF-X | I.C.(M) | MOTOROLA |
| IC24 | UPC78L05T-X | I.C.(M) | NEC |
| IC25 | NJM79L05UA-X | I.C.(M) | JRC |
| IC26 | TC74VHC86F-X | I.C.(M) | TOSHIBA |
| IC27 | TC74HC4538AF-X | I.C.(M) | TOSHIBA |
| IC28 | TC74HC4538AF-X | I.C.(M) | TOSHIBA |
| IC30 | TC7W08F-X | I.C.(M) | TOSHIBA |
| IC31 | UPC78L05T-X | I.C.(M) | NEC |
| IC32 | TC74HC4066AF-X | I.C.(M) | TOSHIBA |
| IC33 | UPC4074G2-X | I.C.(M) | NEC |
| IC34 | UPC78L12T-W | I.C.(M) | NEC |
| IC35 | UPC7BL05T-X | I.C.(M) | NEC |
| IC301 | UPC78L12T-W | I.C.(M) | NEC |
| IC302 | NJM2234M-X | I.C.(M) | JRC |
| IC303 | UPC78L05T-X | I.C.(M) | NEC |
| IC304 | TK16031AMTL | I.C.(M) | TOKO DENSI |
| IC305 | UPC7BL12T-W | I.C.(M) | NEC |
| IC306 | NJM79L05UA-X | I.C.(M) | JRC |
| IC307 | UPC4082G2-X | I.C.(M) | NEC |
| IC308 | LM6361M-X | I.C.(M) | TEXAS |
| IC309 | UPC78L05T-X | I.C.(M) | NEC |
| IC310 | TC4W53F-X | I.C.(M) | TOSHIBA |
| IC311 | NJM2234M-X | I.C.(M) | JRC |
| IC312 | TK16031AMTL | I.C.(M) | TOKO DENSI |
| IC313 | UPC7BL12T-W | I.C.(M) | NEC |
| IC314 | NJM79L05UA-X | I.C.(M) | JRC |
| IC315 | UPC4082G2-X | I.C.(M) | NEC |
| IC316 | LM6361M-X | I.C.(M) | TEXAS |
| IC317 | TC4W53F-X | I.C.(M) | TOSHIBA |
| IC31B | NJM2234M-X | I.C.(M) | JRC |
| IC319 | UPC7BL12T-W | I.C.(M) | NEC |
| IC320 | NJM79L05UA-X | I.C.(M) | JRC |
| IC321 | UPC4082G2-X | I.C.(M) | NEC |
| IC322 | LM6361M-X | I.C.(M) | TEXAS |
| IC323 | TC4W53F-X | I.C.(M) | TOSHIBA |
| IC324 | TC74VHC541F-X | I.C.(M) | TOSHIBA |
| IC325 | TC7W00F-X | I.C.(M) | TOSHIBA |
| IC326 | TC74HC4053AF-X | I.C.(M) | TOSHIBA |
| IC327 | UPC7BL05T-X | I.C.(M) | NEC |

| Symboi No. | Part No. | Psrt Nsmo | Dssoription |
|---|---|---|---|
| IC32B | EL45B3CS-X | I.C.(M) | ELANTEC |
| IC329 | TC7W04F-X | I.C.(M) | TOSHIBA |
| IC330 | TC74VHC221AF-X | I.C.(M) | TOSHIBA |
| IC331 | UPC311G2-X | I.C.(M) | NEC |
| IC601 | UPC78L05T-X | I.C.(M) | NEC |
| IC602 | CXD1175AM-X | I.C.(M) | SONY |
| IC603 | UPC78L05T-X | I.C.(M) | NEC |
| IC604 | CXD1175AM-X | I.C.(M) | SONY |
| IC605 | UPC78L05T-X | I.C.(M) | NEC |
| IC606 | CXD1175AM-X | I.C.(M) | SONY |
| IC607 | JCL0026 | I.C.(M) | JVC |
| IC608 | TC7W04F-X | I.C.(M) | TOSHIBA |
| IC609 | TC7W32F-X | I.C.(M) | TOSHIBA |
| IC610 | DS90C031TM-X | I.C.(M) | NS |
| IC611 | DS90C031TM-X | I.C.(M) | NS |
| IC612 | DS90C031TM-X | I.C.(M) | NS |
| IC613 | DS90C031TM-X | I.C.(M) | NS |
| IC614 | TC74ACT541F-X | I.C.(M) | TOSHIBA |
| IC616 | TD74BC541F-X | I.C.(M) | TOSHIBA |
| IC617 | DS90C031TM-X | I.C.(M) | NS |
| IC618 | AN77L03M-X | I.C.(M) | MATSUSHITA |
| IC619 | TC74VHC541F-X | I.C.(M) | TOSHIBA |
| IC620 | UPC2384GA | I.C.(M) | NEC |
| IC621 | UPC78L12T-W | I.C.(M) | NEC |
| IC622 | UPC78L05T-X | I.C.(M) | NEC |
| IC623 | NJM79L05UA-X | I.C.(M) | JRC |
| IC624 | UPC4082G2-X | I.C.(M) | NEC |
| IC625 | TC74VHC221AF-X | I.C.(M) | TOSHIBA |
| IC626 | JCL0024 | I.C.(M) | JVC |
| IC711 | TD74BC541F-X | I.C.(M) | TOSHI8A |
| IC712 | M519578FP-X | I.C.(M) | MITSU8ISHI |
| Q1 | 2SC4081/OR/-W | TRANSISTOR | ROHM |
| Q2 | 2SA1576A/QRS/-X | TRANSISTOR | ROHM |
| 03 | 2SC4081/QR/-W | TRANSISTOR | ROHM |
| Q4 | 2SA1576A/QRS/-X | TRANSISTOR | ROHM |
| Q5 | 2SC4081/QR/-W | TRANSISTOR | ROHM |
| 06 | 2SC4081/QR/-W | TRANSISTOR | ROHM |
| Q7 | 2SC4081/OR/-W | TRANSISTOR | ROHM |
| 08 | 2SK665-W | FET | MATSUSHITA |
| Q9 | 2SK665-W | FET | MATSUSHITA |
| 010 | 2SC4081/QR/-W | TRANSISTOR | ROHM |
| Q11 | 2SC4081/QR/-W | TRANSISTOR | ROHM |
| Q12 | 2SC4081/OR/-W | TRANSISTOR | ROHM |
| Q13 | 2SC4081/QR/-W | TRANSISTOR | ROHM |
| 014 | 2SC40B1/QR/-W | TRANSISTOR | ROHM |
| 015 | 2SK665-W | FET | MATSUSHITA |
| Q16 | 2SC4081/QR/-W | TRANSISTOR | ROHM |
| Q17 | 2SC4081/OR/-W | TRANSISTOR | ROHM |
| 018 | 2SC4081/OR/-W | TRANSISTOR | ROHM |
| 019 | 2SC4081/OR/-W | TRANSISTOR | ROHM |
| Q20 | 2SC4081/QR/-W | TRANSISTOR | ROHM |
| 021 | 2SC4081/QR/-W | TRANSISTOR | ROHM |
| Q22 | 2SC4081/QR/-W | TRANSISTOR | ROHM |
| Q23 | 2SC4081/QR/-W | TRANSISTOR | ROHM |
| 024 | 2SC4081/QR/-W | TRANSISTOR | ROHM |
| Q25 | 2SC4081/QR/-W | TRANSISTOR | ROHM |
| 026 | 2SC4081/QR/-W | TRANSISTOR | ROHM |
| 027 | DTC124EUA-X | TRANSISTOR | ROHM |

| Symboi No. | Psrt No. | Psrt Nsms | Desoription |
|---|---|---|---|
| Q28 | 2SC4081/QR/-W | TRANSISTOR | ROHM |
| Q29 | 2SA1576A/QRS/-X | TRANSISTOR | ROHM |
| 030 | 2SC4081/QR/-W | TRANSISTOR | ROHM |
| Q31 | 2SA1576A/QRS/-X | TRANSISTOR | ROHM |
| Q32 | 2SC4081/QR/-W | TRANSISTOR | ROHM |
| 033 | 2SC4081/OR/-W | TRANSISTOR | ROHM |
| Q34 | 2SC4081/QR/-W | TRANSISTOR | ROHM |
| Q35 | 2SC4081/QR/-W | TRANSISTOR | ROHM |
| 036 | 2SC4081/QR/-W | TRANSISTOR | ROHM |
| Q37 | 2SA1576A/QRS/-X | TRANSISTOR | ROHM |
| Q38 | 2SC4081/QR/-W | TRANSISTOR | ROHM |
| Q201 | 2SC4081/QR/-W | TRANSISTOR | ROHM |
| 0202 | 2SK665-W | FET | MATSUSHITA |
| Q301 | 2SA1576A/QRS/-X | TRANSISTOR | ROHM |
| 0302 | 2SC4081/QR/-W | TRANSISTOR | ROHM |
| Q304 | 2SC4081/QR/-W | TRANSISTOR | ROHM |
| 0305 | 2SC4081/QR/-W | TRANSISTOR | ROHM |
| 0306 | 2SA1576A/QRS/-X | TRANSISTOR | ROHM |
| Q307 | 2SC4081/QR/-W | TRANSISTOR | ROHM |
| Q308 | 2SC4081/QR/-W | TRANSISTOR | ROHM |
| 0309 | 2SA1576A/ORS/-X | TRANSISTOR | ROHM |
| Q310 | 2SC4081/QR/-W | TRANSISTOR | ROHM |
| Q312 | 2SC4081/QR/-W | TRANSISTOR | ROHM |
| Q313 | 2SC4081/QR/-W | TRANSISTOR | ROHM |
| 0314 | 2SA1576A/QRS/-X | TRANSISTOR | ROHM |
| Q315 | 2SC4081/OR/-W | TRANSISTOR | ROHM |
| Q316 | 2SC4081/QR/-W | TRANSISTOR | ROHM |
| 0317 | 2SA1576A/QRS/-X | TRANSISTOR | ROHM |
| 0318 | 2SC4081/OR/-W | TRANSISTOR | ROHM |
| Q319 | 2SA1576A/ORS/-X | TRANSISTOR | ROHM |
| Q320 | 2SC4081/QR/-W | TRANSISTOR | ROHM |
| 0321 | 2SC4081/QR/-W | TRANSISTOR | ROHM |
| Q322 | 2SA1576A/ORS/-X | TRANSISTOR | ROHM |
| 0323 | 2SC4081/QR/-W | TRANSISTOR | ROHM |
| 0324 | 2SC4081/QR/-W | TRANSISTOR | ROHM |
| Q325 | 2SC4081/QR/-W | TRANSISTOR | ROHM |
| 0326 | 2SA1576A/ORS/-X | TRANSISTOR | ROHM |
| 0327 | 2SA1576A/ORS/-X | TRANSISTOR | ROHM |
| Q328 | 2SC4081/QR/-W | TRANSISTOR | ROHM |
| Q329 | DTC124EUA-X | TRANSISTOR | ROHM |
| 0501 | 2SC4081/QR/-W | TRANSISTOR | ROHM |
| 0502 | 2SC40S1/QR/-W | TRANSISTOR | ROHM |
| Q503 | 2SC4081/QR/-W | TRANSISTOR | ROHM |
| D1 | DAN202U-X | DIODE | ROHM |
| D2 | DAN202U-X | DIODE | ROHM |
| D301 | IMN10-X | D.ARRAY | ROHM |
| D302 | IMN10-X | D.ARRAY | ROHM |
| D303 | DAP202U-X | DIODE | ROHM |
| D601 | DAP202U-X | DIODE | ROHM |
| D602 | DAN202U-X | DIODE | ROHM |
| D603 | DAP202U-X | DIODE | ROHM |
| D604 | DAN202U-X | DIODE | ROHM |
| D605 | DAP202U-X | DIODE | ROHM |
| D606 | DAN202U-X | DIODE | ROHM |
| D607 | DA204U-X | DIODE | ROHM |
| D608 | DA204U-X | DIODE | ROHM |
| D609 | DA204U-X | DIODE | ROHM |

[ANA IN]

| Symbol No. | Part No. | Part Name | Description | |
|---|---|---|---|---|
| R1 | NRSA63J-101X | M.G.RESISTOR | 100 | 1/16W |
| R2 | NRSA63J-151X | M.G.RESISTOR | 150 | 1/16W |
| R3 | NRSA63J-151X | M.G.RESISTOR | 150 | 1/16W |
| R4 | NRSA63J-104X | M.G.RESISTOR | 100k | 1/16W |
| R5 | NRSA63J-101X | M.G.RESISTOR | 100 | 1/16W |
| R6 | NRSA63J-151X | M.G.RESISTOR | 150 | 1/16W |
| R7 | NRSA63J-151X | M.G.RESISTOR | 150 | 1/16W |
| R8 | NRSA63J-151X | M.G.RESISTOR | 150 | 1/16W |
| R9 | NRSA63J-151X | M.G.RESISTOR | 150 | 1/16W |
| R10 | NRSA63J-101X | M.G.RESISTOR | 100 | 1/16W |
| R11 | NRSA63J-101X | M.G.RESISTOR | 100 | 1/16W |
| R12 | NRSA63J-273X | M.G.RESISTOR | 27k | 1/16W |
| R13 | NRSA63J-101X | M.G.RESISTOR | 100 | 1/16W |
| R14 | NRSA63J-101X | M.G.RESISTOR | 100 | 1/16W |
| R15 | NRSA63J-333X | M.G.RESISTOR | 33k | 1/16W |
| R16 | NRSA63J-122X | M.G.RESISTOR | 1.2k | 1/16W |
| R17 | NRSA63J-152X | M.G.RESISTOR | 1.5k | 1/16W |
| R19 | NRVA63D-471X | C.M.F.RESISTOR | 470 | 1/16W |
| R20 | NRVA63D-272X | C.M.F.RESISTOR | 2.7k | 1/16W |
| R21 | NRVA63D-471X | C.M.F.RESISTOR | 470 | 1/16W |
| R22 | NRVA63D-471X | C.M.F.RESISTOR | 470 | 1/16W |
| R23 | NRVA63D-102X | C.M.F.RESISTOR | 1k | 1/16W |
| R24 | NRSA63J-182X | M.G.RESISTOR | 1.8k | 1/16W |
| R25 | NRSA63J-101X | M.G.RESISTOR | 100 | 1/16W |
| R26 | NRSA63J-122X | M.G.RESISTOR | 1.2k | 1/16W |
| R27 | NRSA63J-102X | M.G.RESISTOR | 1k | 1/16W |
| R28 | NRSA63J-102X | M.G.RESISTOR | 1k | 1/16W |
| R29 | NRSA63J-102X | M.G.RESISTOR | 1k | 1/16W |
| R30 | NRSA63J-821X | M.G.RESISTOR | 820 | 1/16W |
| R31 | NRSA63J-272X | M.G.RESISTOR | 2.7k | 1/16W |
| R32 | NRSA63J-101X | M.G.RESISTOR | 100 | 1/16W |
| R33 | NRSA63J-103X | M.G.RESISTOR | 10k | 1/16W |
| R34 | NRSA63J-101X | M.G.RESISTOR | 100 | 1/16W |
| R35 | NRSA63J-334X | M.G.RESISTOR | 330k | 1/16W |
| R36 | NRSA63J-103X | M.G.RESISTOR | 10k | 1/16W |
| R37 | NRSA63J-103X | M.G.RESISTOR | 10k | 1/16W |
| R40 | NRSA63J-332X | M.G.RESISTOR | 3.3k | 1/16W |
| R41 | NRSA63J-182X | M.G.RESISTOR | 1.8k | 1/16W |
| R42 | NRSA63J-182X | M.G.RESISTOR | 1.8k | 1/16W |
| R43 | NRSA63J-221X | M.G.RESISTOR | 220 | 1/16W |
| R44 | NRSA63J-332X | M.G.RESISTOR | 3.3k | 1/16W |
| R45 | NRSA63J-221X | M.G.RESISTOR | 220 | 1/16W |
| R46 | NRSA63J-272X | M.G.RESISTOR | 2.7k | 1/16W |
| R47 | NRSA63J-153X | M.G.RESISTOR | 15k | 1/16W |
| R48 | NRSA63J-750X | M.G.RESISTOR | 75 | 1/16W |
| R49 | NRSA63J-103X | M.G.RESISTOR | 10k | 1/16W |
| R50 | NRSA63J-102X | M.G.RESISTOR | 1k | 1/16W |
| R53 | NRSA63J-331X | M.G.RESISTOR | 330 | 1/16W |
| R54 | NRSA63J-331X | M.G.RESISTOR | 330 | 1/16W |
| R55 | NRSA63J-102X | M.G.RESISTOR | 1k | 1/16W |
| R56 | NRSA63J-681X | M.G.RESISTOR | 680 | 1/16W |
| R57 | NRSA63J-101X | M.G.RESISTOR | 100 | 1/16W |
| R58 | NRSA63J-392X | M.G.RESISTOR | 3.9k | 1/16W |
| R59 | NRSA63J-101X | M.G.RESISTOR | 100 | 1/16W |
| R60 | NRSA63J-272X | M.G.RESISTOR | 2.7k | 1/16W |
| R61 | NRSA63J-101X | M.G.RESISTOR | 100 | 1/16W |
| R62 | NRSA63J-102X | M.G.RESISTOR | 1k | 1/16W |
| R63 | NRSA63J-221X | M.G.RESISTOR | 220 | 1/16W |
| R64 | NRSA63J-221X | M.G.RESISTOR | 220 | 1/16W |
| R65 | NRSA63J-474X | M.G.RESISTOR | 470k | 1/16W |

| Symbol No. | Part No. | Part Name | Description | |
|---|---|---|---|---|
| R66 | NRSA63J-472X | M.G.RESISTOR | 4.7k | 1/16W |
| R67 | NRSA63J-181X | M.G.RESISTOR | 180 | 1/16W |
| R68 | NRSA63J-181X | M.G.RESISTOR | 180 | 1/16W |
| R69 | NRSA63J-122X | M.G.RESISTOR | 1.2k | 1/16W |
| R70 | NRSA63J-681X | M.G.RESISTOR | 680 | 1/16W |
| R71 | NRSA63J-122X | M.G.RESISTOR | 1.2k | 1/16W |
| R72 | NRSA63J-122X | M.G.RESISTOR | 1.2k | 1/16W |
| R73 | NRSA63J-471X | M.G.RESISTOR | 470 | 1/16W |
| R74 | NRSA63J-103X | M.G.RESISTOR | 10k | 1/16W |
| R75 | NRSA63J-681X | M.G.RESISTOR | 680 | 1/16W |
| R76 | NRSA63J-103X | M.G.RESISTOR | 10k | 1/16W |
| R77 | NRSA63J-102X | M.G.RESISTOR | 1k | 1/16W |
| R80 | NRSA63J-331X | M.G.RESISTOR | 330 | 1/16W |
| R81 | NRSA63J-331X | M.G.RESISTOR | 330 | 1/16W |
| R82 | NRSA63J-102X | M.G.RESISTOR | 1k | 1/16W |
| R83 | NRSA63J-681X | M.G.RESISTOR | 680 | 1/16W |
| R84 | NRSA63J-101X | M.G.RESISTOR | 100 | 1/16W |
| R85 | NRSA63J-152X | M.G.RESISTOR | 1.5k | 1/16W |
| R86 | NRSA63J-101X | M.G.RESISTOR | 100 | 1/16W |
| R87 | NRSA63J-222X | M.G.RESISTOR | 2.2k | 1/16W |
| R88 | NRSA63J-272X | M.G.RESISTOR | 2.7k | 1/16W |
| R89 | NRSA63J-221X | M.G.RESISTOR | 220 | 1/16W |
| R90 | NRSA63J-221X | M.G.RESISTOR | 220 | 1/16W |
| R91 | NRSA63J-272X | M.G.RESISTOR | 2.7k | 1/16W |
| R92 | NRSA63J-102X | M.G.RESISTOR | 1k | 1/16W |
| R93 | NRSA63J-102X | M.G.RESISTOR | 1k | 1/16W |
| R94 | NRSA63J-152X | M.G.RESISTOR | 1.5k | 1/16W |
| R95 | NRSA63J-222X | M.G.RESISTOR | 2.2k | 1/16W |
| R96 | NRSA63J-0R0X | M.G.RESISTOR | 0 | 1/16W |
| R99 | NRSA63J-0R0X | M.G.RESISTOR | 0 | 1/16W |
| R100 | NRSA63J-823X | M.G.RESISTOR | 82k | 1/16W |
| R101 | NRSA63J-332X | M.G.RESISTOR | 3.3k | 1/16W |
| R103 | NRSA63J-0R0X | M.G.RESISTOR | 0 | 1/16W |
| R104 | NRSA63J-474X | M.G.RESISTOR | 470k | 1/16W |
| R105 | NRSA63J-684X | M.G.RESISTOR | 680k | 1/16W |
| R106 | NRSA63J-223X | M.G.RESISTOR | 22k | 1/16W |
| R107 | NRSA63J-682X | M.G.RESISTOR | 6.8k | 1/16W |
| R108 | NRSA63J-153X | M.G.RESISTOR | 15k | 1/16W |
| R109 | NRSA63J-223X | M.G.RESISTOR | 22k | 1/16W |
| R110 | NRSA63J-223X | M.G.RESISTOR | 22k | 1/16W |
| R111 | NRSA63J-102X | M.G.RESISTOR | 1k | 1/16W |
| R112 | NRSA63J-221X | M.G.RESISTOR | 220 | 1/16W |
| R113 | NRVA63D-510X | C.M.F.RESISTOR | 51 | 1/16W |
| R114 | NRSA63J-331X | M.G.RESISTOR | 330 | 1/16W |
| R115 | NRSA63J-471X | M.G.RESISTOR | 470 | 1/16W |
| R116 | NRSA63J-681X | M.G.RESISTOR | 680 | 1/16W |
| R117 | NRSA63J-101X | M.G.RESISTOR | 100 | 1/16W |
| R118 | NRSA63J-105X | M.G.RESISTOR | 1M | 1/16W |
| R119 | NRSA63J-101X | M.G.RESISTOR | 100 | 1/16W |
| R120 | NRSA63J-223X | M.G.RESISTOR | 22k | 1/16W |
| R121 | NRSA63J-183X | M.G.RESISTOR | 18k | 1/16W |
| R122 | NRSA63J-222X | M.G.RESISTOR | 2.2k | 1/16W |
| R123 | NRSA63J-152X | M.G.RESISTOR | 1.5k | 1/16W |
| R124 | NRSA63J-104X | M.G.RESISTOR | 100k | 1/16W |
| R125 | NRSA63J-221X | M.G.RESISTOR | 220 | 1/16W |
| R126 | NRSA63J-102X | M.G.RESISTOR | 1k | 1/16W |
| R127 | NRSA63J-122X | M.G.RESISTOR | 1.2k | 1/16W |
| R128 | NRSA63J-122X | M.G.RESISTOR | 1.2k | 1/16W |
| R129 | NRSA63J-221X | M.G.RESISTOR | 220 | 1/16W |
| R130 | NRSA63J-102X | M.G.RESISTOR | 1k | 1/16W |

| Symbol No. | Psrt No. | Psrt Nsms | Dsscription | |
|---|---|---|---|---|
| R131 | NRSA63J-122X | M.G.RESISTOR | 1.2k | 1/16W |
| R132 | NRSA63J-122X | M.G.RESISTOR | 1.2k | 1/16W |
| R133 | NRSA63J-471X | M.G.RESISTOR | 470 | 1/16W |
| R134 | NRSA63J-331X | M.G.RESISTOR | 330 | 1/16W |
| R135 | NRSA63J-331X | M.G.RESISTOR | 330 | 1/16W |
| R136 | NRSA63J-471X | M.G.RESISTOR | 470 | 1/16W |
| R137 | NRSA63J-102X | M.G.RESISTOR | 1k | 1/16W |
| R138 | NRSA63J-101X | M.G.RESISTOR | 100 | 1/16W |
| R139 | NRSA63J-0R0X | M.G.RESISTOR | 0 | 1/16W |
| R140 | NRSA63J-101X | M.G.RESISTOR | 100 | 1/16W |
| R141 | NRSA63J-101X | M.G.RESISTOR | 100 | 1/16W |
| R142 | NRSA63J-471X | M.G.RESISTOR | 470 | 1/16W |
| R143 | NRSA63J-471X | M.G.RESISTOR | 470 | 1/16W |
| R144 | NRSA63J-331X | M.G.RESISTOR | 330 | 1/16W |
| R145 | NRSA63J-331X | M.G.RESISTOR | 330 | 1/16W |
| R146 | NRSA63J-471X | M.G.RESISTOR | 470 | 1/16W |
| R147 | NRSA63J-101X | M.G.RESISTOR | 100 | 1/16W |
| R148 | NRVA63D-223X | C.M.F.RESISTOR | 22k | 1/16W |
| R149 | NRSA63J-184X | M.G.RESISTOR | 180k | 1/16W |
| R150 | NRVA63D-682X | C.M.F.RESISTOR | 6.8k | 1/16W |
| R151 | NRVA63D-822X | C.M.F.RESISTOR | 8.2k | 1/16W |
| R152 | NRSA63J-103X | M.G.RESISTOR | 10k | 1/16W |
| R155 | NRSA63J-221X | M.G.RESISTOR | 220 | 1/16W |
| R156 | NRSA63J-272X | M.G.RESISTOR | 2.7k | 1/16W |
| R157 | NRSA63J-102X | M.G.RESISTOR | 1k | 1/16W |
| R158 | NRSA63J-102X | M.G.RESISTOR | 1k | 1/16W |
| R159 | NRSA63J-122X | M.G.RESISTOR | 1.2k | 1/16W |
| R160 | NRSA63J-102X | M.G.RESISTOR | 1k | 1/16W |
| R161 | NRSA63J-103X | M.G.RESISTOR | 10k | 1/16W |
| R162 | NRSA63J-152X | M.G.RESISTOR | 1.5k | 1/16W |
| R164 | NRSA63J-104X | M.G.RESISTOR | 100k | 1/16W |
| R165 | NRSA63J-103X | M.G.RESISTOR | 10k | 1/16W |
| R166 | NRSA63J-472X | M.G.RESISTOR | 4.7k | 1/16W |
| R167 | NRSA63J-331X | M.G.RESISTOR | 330 | 1/16W |
| R168 | NRSA63J-682X | M.G.RESISTOR | 6.8k | 1/16W |
| R169 | NRSA63J-331X | M.G.RESISTOR | 330 | 1/16W |
| R170 | NRSA63J-682X | M.G.RESISTOR | 6.8k | 1/16W |
| R201 | NRSA63J-331X | M.G.RESISTOR | 330 | 1/16W |
| R203 | NRSA63J-101X | M.G.RESISTOR | 100 | 1/16W |
| R204 | NRSA63J-681X | M.G.RESISTOR | 680 | 1/16W |
| R207 | NRSA63J-0R0X | M.G.RESISTOR | 0 | 1/16W |
| R209 | NRSA63J-331X | M.G.RESISTOR | 330 | 1/16W |
| R210 | NRSA63J-471X | M.G.RESISTOR | 470 | 1/16W |
| R212 | NRSA63J-0R0X | M.G.RESISTOR | 0 | 1/16W |
| R220 | NRSA63J-681X | M.G.RESISTOR | 680 | 1/16W |
| R222 | NRSA63J-103X | M.G.RESISTOR | 10k | 1/16W |
| R301 | NRSA63J-151X | M.G.RESISTOR | 150 | 1/16W |
| R302 | NRSA63J-151X | M.G.RESISTOR | 150 | 1/16W |
| R303 | NRSA63J-393X | M.G.RESISTOR | 39k | 1/16W |
| R304 | NRSA63J-103X | M.G.RESISTOR | 10k | 1/16W |
| R305 | NRSA63J-152X | M.G.RESISTOR | 1.5k | 1/16W |
| R306 | NRSA63F-8060X | M.G.RESISTOR | 806 | 1/16W |
| R307 | NRSA63F-1821X | M.G.RESISTOR | 1.82k | 1/16W |
| R308 | NRSA63J-183X | M.G.RESISTOR | 18k | 1/16W |
| R309 | NRSA63J-223X | M.G.RESISTOR | 22k | 1/16W |
| R310 | NRSA63J-333X | M.G.RESISTOR | 33k | 1/16W |
| R311 | NRSA63J-221X | M.G.RESISTOR | 220 | 1/16W |
| R313 | NRSA63J-103X | M.G.RESISTOR | 10k | 1/16W |
| R314 | NRSA63J-223X | M.G.RESISTOR | 22k | 1/16W |
| R315 | NRVA63D-102X | C.M.F.RESISTOR | 1k | 1/16W |

| Symbol No. | Psrt No. | Psrt Nsms | Descriptinn | |
|---|---|---|---|---|
| R317 | NRSA63J-102X | M.G.RESISTOR | 1k | 1/16W |
| R318 | NRSA63J-222X | M.G.RESISTOR | 2.2k | 1/16W |
| R319 | NRSA63J-101X | M.G.RESISTOR | 100 | 1/16W |
| R320 | NRSA63J-272X | M.G.RESISTOR | 2.7k | 1/16W |
| R321 | NRSA63J-101X | M.G.RESISTOR | 100 | 1/16W |
| R322 | NRSA63J-222X | M.G.RESISTOR | 2.2k | 1/16W |
| R323 | NRSA63J-392X | M.G.RESISTOR | 3.9k | 1/16W |
| R324 | NRSA63J-272X | M.G.RESISTOR | 2.7k | 1/16W |
| R325 | NRSA63J-681X | M.G.RESISTOR | 680 | 1/16W |
| R326 | NRSA63J-101X | M.G.RESISTOR | 100 | 1/16W |
| R327 | NRSA63J-101X | M.G.RESISTOR | 100 | 1/16W |
| R328 | NRSA63J-182X | M.G.RESISTOR | 1.8k | 1/16W |
| R329 | NRSA63J-101X | M.G.RESISTOR | 100 | 1/16W |
| R330 | NRSA63J-472X | M.G.RESISTOR | 4.7k | 1/16W |
| R331 | NRSA63J-472X | M.G.RESISTOR | 4.7k | 1/16W |
| R332 | NRSA63J-101X | M.G.RESISTOR | 100 | 1/16W |
| R333 | NRSA63J-151X | M.G.RESISTOR | 150 | 1/16W |
| R334 | NRSA63J-151X | M.G.RESISTOR | 150 | 1/16W |
| R335 | NRSA63J-393X | M.G.RESISTOR | 39k | 1/16W |
| R336 | NRSA63J-103X | M.G.RESISTOR | 10k | 1/16W |
| R337 | NRSA63J-152X | M.G.RESISTOR | 1.5k | 1/16W |
| R338 | NRSA63F-8060X | M.G.RESISTOR | 806 | 1/16W |
| R339 | NRSA63F-1821X | M.G.RESISTOR | 1.82k | 1/16W |
| R340 | NRSA63J-183X | M.G.RESISTOR | 18k | 1/16W |
| R341 | NRSA63J-223X | M.G.RESISTOR | 22k | 1/16W |
| R342 | NRSA63J-333X | M.G.RESISTOR | 33k | 1/16W |
| R343 | NRSA63J-221X | M.G.RESISTOR | 220 | 1/16W |
| R344 | NRSA63J-101X | M.G.RESISTOR | 100 | 1/16W |
| R345 | NRSA63J-103X | M.G.RESISTOR | 10k | 1/16W |
| R346 | NRSA63J-392X | M.G.RESISTOR | 3.9k | 1/16W |
| R347 | NRSA63J-223X | M.G.RESISTOR | 22k | 1/16W |
| R348 | NRVA63D-102X | C.M.F.RESISTOR | 1k | 1/16W |
| R350 | NRSA63J-333X | M.G.RESISTOR | 33k | 1/16W |
| R351 | NRSA63J-103X | M.G.RESISTOR | 10k | 1/16W |
| R352 | NRSA63J-102X | M.G.RESISTOR | 1k | 1/16W |
| R353 | NRSA63J-222X | M.G.RESISTOR | 2.2k | 1/16W |
| R354 | NRSA63J-101X | M.G.RESISTOR | 100 | 1/16W |
| R355 | NRSA63J-272X | M.G.RESISTOR | 2.7k | 1/16W |
| R356 | NRSA63J-101X | M.G.RESISTOR | 100 | 1/16W |
| R357 | NRSA63J-222X | M.G.RESISTOR | 2.2k | 1/16W |
| R358 | NRSA63J-392X | M.G.RESISTOR | 3.9k | 1/16W |
| R359 | NRSA63J-272X | M.G.RESISTOR | 2.7k | 1/16W |
| R360 | NRSA63J-681X | M.G.RESISTOR | 680 | 1/16W |
| R361 | NRSA63J-101X | M.G.RESISTOR | 100 | 1/16W |
| R362 | NRSA63J-101X | M.G.RESISTOR | 100 | 1/16W |
| R363 | NRSA63J-182X | M.G.RESISTOR | 1.8k | 1/16W |
| R364 | NRSA63J-101X | M.G.RESISTOR | 100 | 1/16W |
| R365 | NRSA63J-272X | M.G.RESISTOR | 2.7k | 1/16W |
| R366 | NRSA63J-272X | M.G.RESISTOR | 2.7k | 1/16W |
| R367 | NRSA63J-101X | M.G.RESISTOR | 100 | 1/16W |
| R368 | NRSA63J-151X | M.G.RESISTOR | 150 | 1/16W |
| R369 | NRSA63J-151X | M.G.RESISTOR | 160 | 1/16W |
| R370 | NRSA63J-393X | M.G.RESISTOR | 39k | 1/16W |
| R371 | NRSA63J-123X | M.G.RESISTOR | 12k | 1/16W |
| R372 | NRSA63J-152X | M.G.RESISTOR | 1.6k | 1/16W |
| R373 | NRSA63F-46R4X | M.G.RESISTOR | 46.4 | 1/16W |
| R374 | NRSA63F-2321X | M.G.RESISTOR | 2.32k | 1/16W |
| R376 | NRSA63J-221X | M.G.RESISTOR | 220 | 1/16W |
| R377 | NRSA63J-221X | M.G.RESISTOR | 220 | 1/16W |
| R378 | NRSA63J-123X | M.G.RESI8TOR | 12k | 1/16W |

[ANA IN]

| Symbol No. | Part No. | Part Name | Description | |
|---|---|---|---|---|
| R379 | NRSA63J-182X | M.G.RESISTOR | 1.8k | 1/16W |
| R380 | NRSA63J-152X | M.G.RESISTOR | 1.5k | 1/16W |
| R382 | NRVA63D-391X | C.M.F.RESISTOR | 390 | 1/16W |
| R384 | NRSA63J-0R0X | M.G.RESISTOR | 0 | 1/16W |
| R385 | NRSA63J-333X | M.G.RESISTOR | 33k | 1/16W |
| R386 | NRSA63J-103X | M.G.RESISTOR | 10k | 1/16W |
| R387 | NRSA63J-182X | M.G.RESISTOR | 1.8k | 1/16W |
| R388 | NRSA63J-222X | M.G.RESISTOR | 2.2k | 1/16W |
| R389 | NRSA63J-101X | M.G.RESISTOR | 100 | 1/16W |
| R390 | NRSA63J-272X | M.G.RESISTOR | 2.7k | 1/16W |
| R391 | NRSA63J-101X | M.G.RESISTOR | 100 | 1/16W |
| R392 | NRSA63J-222X | M.G.RESISTOR | 2.2k | 1/16W |
| R393 | NRSA63J-392X | M.G.RESISTOR | 3.9k | 1/16W |
| R394 | NRSA63J-272X | M.G.RESISTOR | 2.7k | 1/16W |
| R395 | NRSA63J-681X | M.G.RESISTOR | 680 | 1/16W |
| R396 | NRSA63J-101X | M.G.RESISTOR | 100 | 1/16W |
| R397 | NRSA63J-101X | M.G.RESISTOR | 100 | 1/16W |
| R398 | NRSA63J-122X | M.G.RESISTOR | 1.2k | 1/16W |
| R399 | NRSA63J-101X | M.G.RESISTOR | 100 | 1/16W |
| R400 | NRSA63J-101X | M.G.RESISTOR | 100 | 1/16W |
| R401 | NRSA63J-472X | M.G.RESISTOR | 4.7k | 1/16W |
| R402 | NRSA63J-472X | M.G.RESISTOR | 4.7k | 1/16W |
| R403 | NRSA63J-472X | M.G.RESISTOR | 4.7k | 1/16W |
| R404 | NRSA63J-472X | M.G.RESISTOR | 4.7k | 1/16W |
| R405 | NRSA63J-101X | M.G.RESISTOR | 100 | 1/16W |
| R406 | NRSA63J-103X | M.G.RESISTOR | 10k | 1/16W |
| R407 | NRSA63J-103X | M.G.RESISTOR | 10k | 1/16W |
| R408 | NRSA63J-103X | M.G.RESISTOR | 10k | 1/16W |
| R409 | NRSA63J-103X | M.G.RESISTOR | 10k | 1/16W |
| R410 | NRSA63J-103X | M.G.RESISTOR | 10k | 1/16W |
| R411 | NRSA63J-152X | M.G.RESISTOR | 1.5k | 1/16W |
| R412 | NRSA63J-472X | M.G.RESISTOR | 4.7k | 1/16W |
| R413 | NRSA63J-101X | M.G.RESISTOR | 100 | 1/16W |
| R414 | NRSA63J-103X | M.G.RESISTOR | 10k | 1/16W |
| R415 | NRSA63J-153X | M.G.RESISTOR | 15k | 1/16W |
| R416 | NRSA63J-682X | M.G.RESISTOR | 6.8k | 1/16W |
| R417 | NRSA63J-103X | M.G.RESISTOR | 10k | 1/16W |
| R418 | NRSA63J-153X | M.G.RESISTOR | 15k | 1/16W |
| R419 | NRSA63J-682X | M.G.RESISTOR | 6.8k | 1/16W |
| R420 | NRSA63J-102X | M.G.RESISTOR | 1k | 1/16W |
| R421 | NRSA63J-102X | M.G.RESISTOR | 1k | 1/16W |
| R422 | NRSA63J-101X | M.G.RESISTOR | 100 | 1/16W |
| R423 | NRSA63J-0R0X | M.G.RESISTOR | 0 | 1/16W |
| R424 | NRSA63J-153X | M.G.RESISTOR | 15k | 1/16W |
| R425 | NRSA63J-103X | M.G.RESISTOR | 10k | 1/16W |
| R426 | NRSA63J-682X | M.G.RESISTOR | 6.8k | 1/16W |
| R427 | NRSA63J-153X | M.G.RESISTOR | 15k | 1/16W |
| R428 | NRSA63J-103X | M.G.RESISTOR | 10k | 1/16W |
| R429 | NRSA63J-682X | M.G.RESISTOR | 6.8k | 1/16W |
| R430 | NRSA63J-102X | M.G.RESISTOR | 1k | 1/16W |
| R431 | NRSA63J-122X | M.G.RESISTOR | 1.2k | 1/16W |
| R432 | NRSA63J-102X | M.G.RESISTOR | 1k | 1/16W |
| R433 | NRSA63J-102X | M.G.RESISTOR | 1k | 1/16W |
| R434 | NRSA63J-102X | M.G.RESISTOR | 1k | 1/16W |
| R435 | NRSA63J-223X | M.G.RESISTOR | 22k | 1/16W |
| R436 | NRSA63J-823X | M.G.RESISTOR | 82k | 1/16W |
| R437 | NRSA63J-684X | M.G.RESISTOR | 680k | 1/16W |
| R438 | NRSA63J-472X | M.G.RESISTOR | 4.7k | 1/16W |
| R439 | NRSA63J-272X | M.G.RESISTOR | 2.7k | 1/16W |
| R440 | NRSA63J-392X | M.G.RESISTOR | 3.9k | 1/16W |

| Symbol No. | Psrt No. | Pert Neme | Doscription | |
|---|---|---|---|---|
| R441 | NRSA63J-152X | M.G.RESISTOR | 1.5k | 1/16W |
| R442 | NRSA63J-152X | M.G.RESISTOR | 1.5k | 1/16W |
| R443 | NRSA63J-102X | M.G.RESISTOR | 1k | 1/16W |
| R444 | NRSA63J-333X | M.G.RESISTOR | 33k | 1/16W |
| R445 | NRSA63J-333X | M.G.RESISTOR | 33k | 1/16W |
| R446 | NRSA63J-562X | M.G.RESISTOR | 5.6k | 1/16W |
| R447 | NRSA63J-152X | M.G.RESISTOR | 1.6k | 1/16W |
| R448 | NRSA63J-821X | M.G.RESISTOR | 820 | 1/16W |
| R449 | NRSA63J-101X | M.G.RESISTOR | 100 | 1/16W |
| R450 | NRSA63J-101X | M.G.RESISTOR | 100 | 1/16W |
| R451 | NRSA63J-101X | M.G.RESISTOR | 100 | 1/16W |
| R452 | NRSA63J-392X | M.G.RESISTOR | 3.9k | 1/16W |
| R453 | NRSA63J-333X | M.G.RESISTOR | 33k | 1/16W |
| R454 | NRSA63J-103X | M.G.RESISTOR | 10k | 1/16W |
| R455 | NRVA63D-682X | C.M.F.RESISTOR | 6.8k | 1/16W |
| R456 | NRVA63D-682X | C.M.F.RESISTOR | 6.8k | 1/16W |
| R457 | NRVA63D-152X | C.M.F.RESISTOR | 1.5k | 1/16W |
| R501 | NRVA63D-102X | C.M.F.RESISTOR | 1k | 1/16W |
| R503 | NRSA63J-682X | M.G.RESISTOR | 6.8k | 1/16W |
| R504 | NRSA63J-392X | M.G.RESISTOR | 3.9k | 1/16W |
| R505 | NRSA63J-0R0X | M.G.RESISTOR | 0 | 1/16W |
| R506 | NRSA63J-0R0X | M.G.RESISTOR | 0 | 1/16W |
| R507 | NRSA63J-101X | M.G.RESISTOR | 100 | 1/16W |
| R508 | NRVA63D-102X | C.M.F.RESISTOR | 1k | 1/16W |
| R509 | NRSA63J-0R0X | M.G.RESISTOR | 0 | 1/16W |
| R510 | NRSA63J-682X | M.G.RESISTOR | 6.8k | 1/16W |
| R511 | NRSA63J-392X | M.G.RESISTOR | 3.9k | 1/16W |
| R513 | NRSA63J-0R0X | M.G.RESISTOR | 0 | 1/16W |
| R515 | NRVA63D-391X | C.M.F.RESISTOR | 390 | 1/16W |
| R516 | NRSA63J-222X | M.G.RESISTOR | 2.2k | 1/16W |
| R517 | NRSA63J-152X | M.G.RESISTOR | 1.5k | 1/16W |
| R519 | NRSA63J-0R0X | M.G.RESISTOR | 0 | 1/16W |
| R520 | NRSA63J-101X | M.G.RESISTOR | 100 | 1/16W |
| R522 | NRSA63J-0R0X | M.G.RESISTOR | 0 | 1/16W |
| R524 | NRSA63J-0R0X | M.G.RESISTOR | 0 | 1/16W |
| R526 | NRSA63J-0R0X | M.G.RESISTOR | 0 | 1/16W |
| R601 | NRSA63J-750X | M.G.RESISTOR | 75 | 1/16W |
| R603 | NRSA63J-182X | M.G.RESISTOR | 1.8k | 1/16W |
| R604 | NRSA63J-182X | M.G.RESISTOR | 1.8k | 1/16W |
| R605 | NRSA63J-103X | M.G.RESISTOR | 10k | 1/16W |
| R606 | NRSA63J-750X | M.G.RESISTOR | 75 | 1/16W |
| R608 | NRSA63J-182X | M.G.RESISTOR | 1.8k | 1/16W |
| R609 | NRSA63J-182X | M.G.RESISTOR | 1.8k | 1/16W |
| R610 | NRSA63J-103X | M.G.RESISTOR | 10k | 1/16W |
| R611 | NRSA63J-750X | M.G.RESISTOR | 75 | 1/16W |
| R613 | NRSA63J-182X | M.G.RESISTOR | 1.8k | 1/16W |
| R614 | NRSA63J-182X | M.G.RESISTOR | 1.8k | 1/16W |
| R615 | NRSA63J-103X | M.G.RESISTOR | 10k | 1/16W |
| R617 | NRSA63J-101X | M.G.RESISTOR | 100 | 1/16W |
| R618 | NRSA63J-101X | M.G.RESISTOR | 100 | 1/16W |
| R619 | NRSA63J-101X | M.G.RESISTOR | 100 | 1/16W |
| R620 | NRSA63J-101X | M.G.RESISTOR | 100 | 1/16W |
| R621 | NRSA63J-101X | M.G.RESISTOR | 100 | 1/16W |
| R625 | NRSA63J-0R0X | M.G.RESISTOR | 0 | 1/16W |
| R629 | NRSA63J-0R0X | M.G.RESISTOR | 0 | 1/16W |
| R632 | NRSA63J-0R0X | M.G.RESISTOR | 0 | 1/16W |
| R635 | NRSA63J-0R0X | M.G.RESISTOR | 0 | 1/16W |
| R639 | NRSA63J-0R0X | M.G.RESISTOR | 0 | 1/16W |
| R642 | NRSA63J-101X | M.G.RESISTOR | 100 | 1/16W |
| R643 | NRSA63J-101X | M.G.RESISTOR | 100 | 1/16W |

| Symbol No. | Part No. | Part Name | Description |
|---|---|---|---|
| R645 | NRSA63J-101X | M.G.RESISTOR | 100 1/16W |
| R646 | NRSA63J-101X | M.G.RESISTOR | 100 1/16W |
| R647 | NRSA63J-101X | M.G.RESISTOR | 100 1/16W |
| R648 | NRSA63J-101X | M.G.RESISTOR | 100 1/16W |
| R649 | NRSA63J-101X | M.G.RESISTOR | 100 1/16W |
| R650 | NRSA63J-101X | M.G.RESISTOR | 100 1/16W |
| R651 | NRSA63J-101X | M.G.RESISTOR | 100 1/16W |
| R652 | NRSA63J-101X | M.G.RESISTOR | 100 1/16W |
| R653 | NRSA63J-101X | M.G.RESISTOR | 100 1/16W |
| R654 | NRSA63J-101X | M.G.RESISTOR | 100 1/16W |
| R655 | NRSA63J-101X | M.G.RESISTOR | 100 1/16W |
| R656 | NRSA63J-101X | M.G.RESISTOR | 100 1/16W |
| R659 | NRSA63J-101X | M.G.RESISTOR | 100 1/16W |
| R660 | NRSA63J-101X | M.G.RESISTOR | 100 1/16W |
| R661 | NRSA63J-0R0X | M.G.RESISTOR | 0 1/16W |
| R662 | NRSA63J-101X | M.G.RESISTOR | 100 1/16W |
| R663 | NRSA63J-221X | M.G.RESISTOR | 220 1/16W |
| R665 | NRSA63J-103X | M.G.RESISTOR | 10k 1/16W |
| R666 | NRSA63J-103X | M.G.RESISTOR | 10k 1/16W |
| R667 | NRSA63J-103X | M.G.RESISTOR | 10k 1/16W |
| R668 | NRSA63J-101X | M.G.RESISTOR | 100 1/16W |
| R669 | NRSA63J-101X | M.G.RESISTOR | 100 1/16W |
| R671 | NRSA63J-103X | M.G.RESISTOR | 10k 1/16W |
| R672 | NRSA63J-103X | M.G.RESISTOR | 10k 1/16W |
| R673 | NRSA63J-333X | M.G.RESISTOR | 33k 1/16W |
| R674 | NRVA63D-912X | C.M.F.RESISTOR | 9.1k 1/16W |
| R675 | NRVA63D-473X | C.M.F.RESISTOR | 47k 1/16W |
| R676 | NRVA63D-333X | C.M.F.RESISTOR | 33k 1/16W |
| R677 | NRSA63J-471X | M.G.RESISTOR | 470 1/16W |
| R678 | NRSA63J-223X | M.G.RESISTOR | 22k 1/16W |
| R679 | NRVA63D-153X | C.M.F.RESISTOR | 15k 1/16W |
| R680 | NRVA63D-472X | C.M.F.RESISTOR | 4.7k 1/16W |
| R681 | NRSA63J-101X | M.G.RESISTOR | 100 1/16W |
| R682 | NRSA63J-472X | M.G.RESISTOR | 4.7k 1/16W |
| R683 | NRSA63J-472X | M.G.RESISTOR | 4.7k 1/16W |
| R684 | NRSA63J-101X | M.G.RESISTOR | 100 1/16W |
| R685 | NRSA63J-101X | M.G.RESISTOR | 100 1/16W |
| R686 | NRSA63J-101X | M.G.RESISTOR | 100 1/16W |
| R687 | NRSA63J-101X | M.G.RESISTOR | 100 1/16W |
| R711 | NRSA63J-332X | M.G.RESISTOR | 3.3k 1/16W |
| R712 | NRSA63J-122X | M.G.RESISTOR | 1.2k 1/16W |
| R716 | NRSA63J-0R0X | M.G.RESISTOR | 0 1/16W |
| R717 | NRSA63J-472X | M.G.RESISTOR | 4.7k 1/16W |
| R721 | NRSA63J-101X | M.G.RESISTOR | 100 1/16W |
| R727 | NRSA63J-101X | M.G.RESISTOR | 100 1/16W |
| R728 | NRSA63J-101X | M.G.RESISTOR | 100 1/16W |
| R729 | NRSA63J-101X | M.G.RESISTOR | 100 1/16W |
| R732 | NRSA63J-0R0X | M.G.RESISTOR | 0 1/16W |
| R733 | NRSA63J-272X | M.G.RESISTOR | 2.7k 1/16W |
| R734 | NRSA63J-562X | M.G.RESISTOR | 5.6k 1/16W |
| R735 | NRSA63J-272X | M.G.RESISTOR | 2.7k 1/16W |
| R736 | NRSA63J-562X | M.G.RESISTOR | 5.6k 1/16W |
| R740 | NRSA63J-472X | M.G.RESISTOR | 4.7k 1/16W |
| VR1 | NVP1416-501X | TRIM.RESISTOR | 500, COMB C |
| VR2 | NVP1416-501X | TRIM.RESISTOR | 500, COMB Y |
| VR3 | NVP1416-501X | TRIM.RESISTOR | 500, YC Y LEV |
| VR4 | NVP1415-103X | TRIM.RESISTOR | 10k, C DET |
| VR5 | NVP1416-501X | TRIM.RESISTOR | 500, DEC R LEV |

| Symbol No. | Part No. | Part Name | Description |
|---|---|---|---|
| VR6 | NVP1416-501X | TRIM.RESISTOR | 500, DEC B LEV |
| VR7 | NVP1416-203X | TRIM.RESISTOR | 20k, HUE OF S1 |
| VR9 | NVP1416-103X | TRIM.RESISTOR | 10k, B BLK |
| VR10 | NVP1416-103X | TRIM.RESISTOR | 10k, R BLK |
| VR301 | NVP1416-501X | TRIM.RESISTOR | 500, R LEV |
| VR302 | NVP1416-501X | TRIM.RESISTOR | 500, B LEV |
| VR303 | NVP1416-501X | TRIM.RESISTOR | 500, Y LEV |
| VR304 | NVP1415-103X | TRIM.RESISTOR | 10k, B DL |
| VR305 | NVP1415-103X | TRIM.RESISTOR | 10k, YC B DL |
| VR306 | NVP1415-103X | TRIM.RESISTOR | 10k, YC R DL |
| VR307 | NVP1415-103X | TRIM.RESISTOR | 10k, R DL |
| VR308 | NVP1415-103X | TRIM.RESISTOR | 10k, VITC DC |
| VR601 | NVP1416-502X | TRIM.RESISTOR | 5k, CP Y |
| VR602 | NVP1416-502X | TRIM.RESISTOR | 5k, CP R |
| VR603 | NVP1416-502X | TRIM.RESISTOR | 5k, CP B |
| VR604 | NVP1416-202X | TRIM.RESISTOR | 2k, PS DC |
| RA301 | NRZ0015-101X | R NETWORK | 100 |
| RA302 | NRZ0015-101X | R NETWORK | 100 |
| RA601 | NRZ0015-101X | R NETWORK | 100 |
| RA602 | NRZ0015-101X | R NETWORK | 100 |
| RA603 | NRZ0015-101X | R NETWORK | 100 |
| RA604 | NRZ0015-101X | R NETWORK | 100 |
| RA605 | NRZ0015-101X | R NETWORK | 100 |
| RA606 | NRZ0015-101X | R NETWORK | 100 |
| RA607 | NRZ0015-101X | R NETWORK | 100 |
| RA608 | NRZ0015-101X | R NETWORK | 100 |
| RA609 | NRZ0015-101X | R NETWORK | 100 |
| RA610 | NRZ0015-101X | R NETWORK | 100 |
| RA611 | NRZ0015-101X | R NETWORK | 100 |
| RA612 | NRZ0015-101X | R NETWORK | 100 |
| RA613 | NRZ0015-101X | R NETWORK | 100 |
| RA614 | NRZ0015-101X | R NETWORK | 100 |
| RA615 | NRZ0015-101X | R NETWORK | 100 |
| RA616 | NRZ0015-101X | R NETWORK | 100 |
| RA617 | NRZ0029-103X | R NETWORK | 10k |
| RA618 | NRZ0029-103X | R NETWORK | 10k |
| RA619 | NRZ0029-103X | R NETWORK | 10k |
| C1 | NCB31HK-103X | CER.CAPACITOR | 0.01 50V |
| C2 | NCB31HK-103X | CER.CAPACITOR | 0.01 50V |
| C3 | NEH91CM-476X | E.CAPACITOR | 47 16V |
| C4 | NEZ0001-107X | E.CAPACITOR | 100 10V |
| C5 | NEZ0001-107X | E.CAPACITOR | 100 10V |
| C6 | NCB31HK-103X | CER.CAPACITOR | 0.01 50V |
| C7 | NCB31HK-103X | CER.CAPACITOR | 0.01 50V |
| C8 | NCB31HK-103X | CER.CAPACITOR | 0.01 50V |
| C9 | NEZ0001-107X | E.CAPACITOR | 100 10V |
| C10 | NCB31HK-103X | CER.CAPACITOR | 0.01 50V |
| C11 | NEZ0001-107X | E.CAPACITOR | 100 10V |
| C12 | NCB31HK-103X | CER.CAPACITOR | 0.01 50V |
| C13 | NCB31HK-103X | CER.CAPACITOR | 0.01 50V |
| C14 | NCB31HK-103X | CER.CAPACITOR | 0.01 50V |
| C15 | NCB31HK-103X | CER.CAPACITOR | 0.01 50V |
| C16 | NCB31HK-103X | CER.CAPACITOR | 0.01 50V |
| C17 | NEH91CM-476X | E.CAPACITOR | 47 16V |
| C18 | NCB31HK-103X | CER.CAPACITOR | 0.01 50V |
| C19 | NCB31HK-103X | CER.CAPACITOR | 0.01 50V |

[ANA IN]

| Symbol No. | Part No. | Part Nama | Description | |
|---|---|---|---|---|
| C20 | NEH91CM-476X | E.CAPACITOR | 47 | 16V |
| C21 | NEZ0001-107X | E.CAPACITOR | 100 | 10V |
| C22 | NEH90JM-336X | E.CAPACITOR | 33 | 6.3V |
| C24 | NCS31HJ-100X | CER.CAPACITOR | 10P | 50V |
| C26 | NC831HK-103X | CER.CAPACITOR | 0.01 | 50V |
| C27 | NCB31HK-103X | CER.CAPACITOR | 0.01 | 50V |
| C28 | NCS31HJ-271X | CER.CAPACITOR | 270P | 50V |
| C29 | NCS31HJ-121X | CER.CAPACITOR | 120P | 50V |
| C30 | NEN21HM-474X | N.P.CAPACITOR | 0.47 | 50V |
| C31 | NCS31HJ-101X | CER.CAPACITOR | 100P | 50V |
| C32 | NCS31HJ-330X | CER.CAPACITOR | 33P | 50V |
| C33 | NCB31HK-103X | CER.CAPACITOR | 0.01 | 50V |
| C34 | NCB31HK-103X | CER.CAPACITOR | 0.01 | 50V |
| C35 | NCB31HK-103X | CER.CAPACITOR | 0.01 | 50V |
| C36 | NEZ0001-107X | E.CAPACITOR | 100 | 10V |
| C37 | NCB31HK-103X | CER.CAPACITOR | 0.01 | 50V |
| C38 | NCB31HK-103X | CER.CAPACITOR | 0.01 | 50V |
| C39 | NEZ0001-107X | E.CAPACITOR | 100 | 10V |
| C40 | NCB31HK-103X | CER.CAPACITOR | 0.01 | 50V |
| C41 | NCF31CZ-104X | CER.CAPACITOR | 0.1 | 16V |
| C42 | NCF31CZ-104X | CER.CAPACITOR | 0.1 | 16V |
| C43 | NCB31HK-103X | CER.CAPACITOR | 0.01 | 50V |
| C44 | NCB31HK-103X | CER.CAPACITOR | 0.01 | 50V |
| C45 | NEZ0001-107X | E.CAPACITOR | 100 | 10V |
| C46 | NCF31CZ-104X | CER.CAPACITOR | 0.1 | 16V |
| C47 | NCF31CZ-104X | CER.CAPACITOR | 0.1 | 16V |
| C48 | NCF31CZ-104X | CER.CAPACITOR | 0.1 | 16V |
| C49 | NCF31CZ-104X | CER.CAPACITOR | 0.1 | 16V |
| C50 | NCS31HJ-180X | CER.CAPACITOR | 18P | 50V |
| C51 | NCF31CZ-104X | CER.CAPACITOR | 0.1 | 16V |
| C52 | NCS31EJ-102X | CER.CAPACITOR | 1000P | 25V |
| C53 | NCB31HK-103X | CER.CAPACITOR | 0.01 | 50V |
| C54 | NCB31HK-103X | CER.CAPACITOR | 0.01 | 50V |
| C55 | NCF31CZ-104X | CER.CAPACITOR | 0.1 | 16V |
| C56 | NCB31HK-103X | CER.CAPACITOR | 0.01 | 50V |
| C57 | NEH91HM-106X | E.CAPACITOR | 10 | 50V |
| C58 | NCB31HK-103X | CER.CAPACITOR | 0.01 | 50V |
| C59 | NCB31HK-103X | CER.CAPACITOR | 0.01 | 50V |
| C60 | NEH91CM-476X | E.CAPACITOR | 47 | 16V |
| C61 | NCF31CZ-104X | CER.CAPACITOR | 0.1 | 16V |
| C62 | NCB31HK-103X | CER.CAPACITOR | 0.01 | 50V |
| C63 | NCB31HK-103X | CER.CAPACITOR | 0.01 | 50V |
| C64 | NEH91CM-476X | E.CAPACITOR | 47 | 16V |
| C67 | NCS31HJ-120X | CER.CAPACITOR | 12P | 50V |
| C68 | NCS31HJ-120X | CER.CAPACITOR | 12P | 50V |
| C69 | NCF31CZ-104X | CER.CAPACITOR | 0.1 | 16V |
| C70 | NCF31CZ-104X | CER.CAPACITOR | 0.1 | 16V |
| C71 | NCB31HK-103X | CER.CAPACITOR | 0.01 | 50V |
| C72 | NCB31HK-103X | CER.CAPACITOR | 0.01 | 50V |
| C73 | NCF31CZ-104X | CER.CAPACITOR | 0.1 | 16V |
| C74 | NCS31HJ-150X | CER.CAPACITOR | 15P | 50V |
| C75 | NCF31CZ-104X | CER.CAPACITOR | 0.1 | 16V |
| C76 | NCB31HK-103X | CER.CAPACITOR | 0.01 | 50V |
| C77 | NCB31HK-103X | CER.CAPACITOR | 0.01 | 50V |
| C78 | NEH91CM-476X | E.CAPACITOR | 47 | 16V |
| C79 | NEH90JM-107X | E.CAPACITOR | 100 | 6.3V |
| CB2 | NCS31HJ-120X | CER.CAPACITOR | 12P | 50V |
| C83 | NCS31HJ-120X | CER.CAPACITOR | 12P | 50V |
| CB4 | NEZ0001-107X | E.CAPACITOR | 100 | 10V |

| Symbol No. | Part Ne. | Part Neme | Description | |
|---|---|---|---|---|
| CB5 | NEZ0001-107X | E.CAPACITOR | 100 | 10V |
| C86 | NCB31HK-103X | CER.CAPACITOR | 0.01 | 50V |
| C87 | NCS31HJ-271X | CER.CAPACITOR | 270P | 50V |
| C88 | NCS31HJ-121X | CER.CAPACITOR | 120P | 50V |
| C89 | NCS31HJ-560X | CER.CAPACITOR | 56P | 50V |
| C93 | NEH91HM-105X | E.CAPACITOR | 1 | 50V |
| C94 | NEH91EM-475X | E.CAPACITOR | 4.7 | 25V |
| C95 | NFV41CJ-473X | FILM CAPACITOR | 0.047 | 16V |
| C96 | NFV41CJ-473X | FILM CAPACITOR | 0.047 | 16V |
| C97 | NEZ0001-107X | E.CAPACITOR | 100 | 10V |
| C98 | NCB31HK-103X | CER.CAPACITOR | 0.01 | 50V |
| C99 | NCF31CZ-104X | CER.CAPACITOR | 0.1 | 16V |
| C100 | NCF31CZ-104X | CER.CAPACITOR | 0.1 | 16V |
| C101 | NEH91HM-105X | E.CAPACITOR | 1 | 50V |
| C102 | NCS31EJ-102X | CER.CAPACITOR | 1000P | 25V |
| C103 | NCS31EJ-102X | CER.CAPACITOR | 1000P | 25V |
| C104 | NCB31HK-103X | CER.CAPACITOR | 0.01 | 50V |
| C105 | NEH91CM-476X | E.CAPACITOR | 47 | 16V |
| C106 | NCB31HK-103X | CER.CAPACITOR | 0.01 | 50V |
| C107 | NCB31HK-103X | CER.CAPACITOR | 0.01 | 50V |
| C108 | NCB31CK-473X | CER.CAPACITOR | 0.047 | 16V |
| C109 | NEH91CM-476X | E.CAPACITOR | 47 | 16V |
| C110 | NCS31HJ-100X | CER.CAPACITOR | 10P | 50V |
| C111 | NCS31EJ-102X | CER.CAPACITOR | 1000P | 25V |
| C112 | NCS31EJ-102X | CER.CAPACITOR | 1000P | 25V |
| C113 | NCB31HK-103X | CER.CAPACITOR | 0.01 | 50V |
| C114 | NEZ0001-107X | E.CAPACITOR | 100 | 10V |
| C115 | NCB31HK-103X | CER.CAPACITOR | 0.01 | 50V |
| C116 | NCB31HK-103X | CER.CAPACITOR | 0.01 | 50V |
| C117 | NCF31CZ-104X | CER.CAPACITOR | 0.1 | 16V |
| C118 | NCB31HK-103X | CER.CAPACITOR | 0.01 | 50V |
| C119 | NCF31CZ-104X | CER.CAPACITOR | 0.1 | 16V |
| C120 | NEZ0001-107X | E.CAPACITOR | 100 | 10V |
| C121 | NEZ0001-107X | E.CAPACITOR | 100 | 10V |
| C122 | NCB31HK-103X | CER.CAPACITOR | 0.01 | 50V |
| C123 | NCS31HJ-150X | CER.CAPACITOR | 15P | 50V |
| C126 | NCB31HK-103X | CER.CAPACITOR | 0.01 | 50V |
| C127 | NCB31HK-103X | CER.CAPACITOR | 0.01 | 50V |
| C130 | NCS31HJ-150X | CER.CAPACITOR | 15P | 50V |
| C131 | NEZ0001-107X | E.CAPACITOR | 100 | 10V |
| C132 | NCB31HK-103X | CER.CAPACITOR | 0.01 | 50V |
| C133 | NCB31HK-103X | CER.CAPACITOR | 0.01 | 50V |
| C134 | NEZ0001-107X | E.CAPACITOR | 100 | 10V |
| C135 | NCB31HK-103X | CER.CAPACITOR | 0.01 | 50V |
| C136 | NCB31HK-103X | CER.CAPACITOR | 0.01 | 50V |
| C137 | NCB31HK-103X | CER.CAPACITOR | 0.01 | 50V |
| C138 | NFV41HJ-272X | FILM CAPACITOR | 2700P | 50V |
| C139 | NCB31HK-103X | CER.CAPACITOR | 0.01 | 50V |
| C140 | NCB31HK-103X | CER.CAPACITOR | 0.01 | 50V |
| C141 | NCS31HJ-471X | CER.CAPACITOR | 470P | 50V |
| C142 | NCB31HK-103X | CER.CAPACITOR | 0.01 | 50V |
| C143 | NCS31HJ-471X | CER.CAPACITOR | 470P | 50V |
| C144 | NCS31HJ-151X | CER.CAPACITOR | 150P | 50V |
| C146 | NCB31HK-103X | CER.CAPACITOR | 0.01 | 50V |
| C147 | NEZ0001-107X | E.CAPACITOR | 100 | 10V |
| C148 | NCB31HK-103X | CER.CAPACITOR | 0.01 | 50V |
| C149 | NCB31HK-103X | CER.CAPACITOR | 0.01 | 50V |
| C150 | NCS31HJ-271X | CER.CAPACITOR | 270P | 50V |
| C151 | NCS31HJ-121X | CER.CAPACITOR | 120P | 50V |

| Symbol No. | Psrt No. | Psrt Nsme | Dseoription | |
|---|---|---|---|---|
| C152 | NFV41HJ-102X | FILM CAPACITOR | 1000P | 50V |
| C153 | NCB31HK-103X | CER.CAPACITOR | 0.01 | 50V |
| C154 | NFV41HJ-102X | FILM CAPACITOR | 1000P | 50V |
| C155 | NFV41HJ-102X | FILM CAPACITOR | 1000P | 50V |
| C156 | NCB31HK-103X | CER.CAPACITOR | 0.01 | 50V |
| C157 | NEN21VM-225X | N.P.CAPACITOR | 2.2 | 35V |
| C158 | NEZ0001-107X | E.CAPACITOR | 100 | 10V |
| C159 | NEH91CM-476X | E.CAPACITOR | 47 | 16V |
| C160 | NCB31HK-103X | CER.CAPACITOR | 0.01 | 50V |
| C161 | NCB31HK-103X | CER.CAPACITOR | 0.01 | 50V |
| C162 | NEZ0001-107X | E.CAPACITOR | 100 | 10V |
| C163 | NCB31HK-103X | CER.CAPACITOR | 0.01 | 50V |
| C164 | NCB31HK-103X | CER.CAPACITOR | 0.01 | 50V |
| C201 | NCS31HJ-101X | CER.CAPACITOR | 100P | 50V |
| C301 | NC831HK-103X | CER.CAPACITOR | 0.01 | 50V |
| C302 | NCB31HK-103X | CER.CAPACITOR | 0.01 | 50V |
| C303 | NEH91CM-476X | E.CAPACITOR | 47 | 16V |
| C304 | NEZ0001-107X | E.CAPACITOR | 100 | 10V |
| C305 | NEZ0001-107X | E.CAPACITOR | 100 | 10V |
| C306 | NEZ0001-107X | E.CAPACITOR | 100 | 10V |
| C307 | NEZ0001-107X | E.CAPACITOR | 100 | 10V |
| C308 | NCB31HK-103X | CER.CAPACITOR | 0.01 | 50V |
| C309 | NCB31HK-103X | CER.CAPACITOR | 0.01 | 50V |
| C310 | NCB31HK-103X | CER.CAPACITOR | 0.01 | 50V |
| C311 | NEZ0001-107X | E.CAPACITOR | 100 | 10V |
| C312 | NEZ0001-107X | E.CAPACITOR | 100 | 10V |
| C313 | NCB31HK-103X | CER.CAPACITOR | 0.01 | 50V |
| C314 | NCB31HK-103X | CER.CAPACITOR | 0.01 | 50V |
| C315 | NCB31HK-103X | CER.CAPACITOR | 0.01 | 50V |
| C316 | NCB31HK-103X | CER.CAPACITOR | 0.01 | 50V |
| C317 | NEH91CM-476X | E.CAPACITOR | 47 | 16V |
| C318 | NCB31HK-103X | CER.CAPACITOR | 0.01 | 50V |
| C319 | NCB31HK-103X | CER.CAPACITOR | 0.01 | 50V |
| C320 | NEZ0001-107X | E.CAPACITOR | 100 | 10V |
| C321 | NEZ0001-107X | E.CAPACITOR | 100 | 10V |
| C322 | NCS31HJ-221X | CER.CAPACITOR | 220P | 50V |
| C323 | NEZ0001-107X | E.CAPACITOR | 100 | 10V |
| C324 | NCB31HK-103X | CER.CAPACITOR | 0.01 | 50V |
| C325 | NFV41HJ-102X | FILM CAPACITOR | 1000P | 50V |
| C326 | NC831HK-103X | CER.CAPACITOR | 0.01 | 50V |
| C327 | NFV41CJ-473X | FILM CAPACITOR | 0.047 | 16V |
| C328 | NCF31CZ-104X | CER.CAPACITOR | 0.1 | 16V |
| C329 | NEZ0001-107X | E.CAPACITOR | 100 | 10V |
| C330 | NCS31HJ-680X | CER.CAPACITOR | 68P | 50V |
| C331 | NCB31HK-103X | CER.CAPACITOR | 0.01 | 50V |
| C333 | NCB31HK-103X | CER.CAPACITOR | 0.01 | 50V |
| C334 | NCB31HK-103X | CER.CAPACITOR | 0.01 | 50V |
| C335 | NCB31HK-103X | CER.CAPACITOR | 0.01 | 50V |
| C336 | NEZ0001-107X | E.CAPACITOR | 100 | 10V |
| C337 | NCB31HK-103X | CER.CAPACITOR | 0.01 | 50V |
| C338 | NCB31HK-103X | CER.CAPACITOR | 0.01 | 50V |
| C339 | NEZ0001-107X | E.CAPACITOR | 100 | 10V |
| C340 | NEZ0001-107X | E.CAPACITOR | 100 | 10V |
| C341 | NEZ0001-107X | E.CAPACITOR | 100 | 10V |
| C342 | NEZ0001-107X | E.CAPACITOR | 100 | 10V |
| C343 | NCB31HK-103X | CER.CAPACITOR | 0.01 | 50V |
| C344 | NEZ0001-107X | E.CAPACITOR | 100 | 10V |
| C345 | NCB31HK-103X | CER.CAPACITOR | 0.01 | 50V |
| C346 | NCB31HK-103X | CER.CAPACITOR | 0.01 | 50V |

| Symbol No. | Psrt No. | Psrt Nsms | Description | |
|---|---|---|---|---|
| C347 | NCB31HK-103X | CER.CAPACITOR | 0.01 | 50V |
| C348 | NCB31HK-103X | CER.CAPACITOR | 0.01 | 50V |
| C349 | NEH91CM-476X | E.CAPACITOR | 47 | 16V |
| C350 | NCB31HK-103X | CER.CAPACITOR | 0.01 | 50V |
| C351 | NCB31HK-103X | CER.CAPACITOR | 0.01 | 50V |
| C352 | NEZ0001-107X | E.CAPACITOR | 100 | 10V |
| C353 | NEZ0001-107X | E.CAPACITOR | 100 | 10V |
| C354 | NCS31HJ-221X | CER.CAPACITOR | 220P | 50V |
| C355 | NEZ0001-107X | E.CAPACITOR | 100 | 10V |
| C356 | NCB31HK-103X | CER.CAPACITOR | 0.01 | 50V |
| C357 | NFV41HJ-102X | FILM CAPACITOR | 1000P | 50V |
| C358 | NCB31HK-103X | CER.CAPACITOR | 0.01 | 50V |
| C359 | NFV41CJ-473X | FILM CAPACITOR | 0.047 | 16V |
| C360 | NCF31CZ-104X | CER.CAPACITOR | 0.1 | 16V |
| C361 | NEZ0001-107X | E.CAPACITOR | 100 | 10V |
| C362 | NCS31HJ-680X | CER.CAPACITOR | 68P | 50V |
| C363 | NCB31HK-103X | CER.CAPACITOR | 0.01 | 50V |
| C365 | NCB31HK-103X | CER.CAPACITOR | 0.01 | 50V |
| C366 | NCB31HK-103X | CER.CAPACITOR | 0.01 | 50V |
| C367 | NEZ0001-107X | E.CAPACITOR | 100 | 10V |
| C368 | NEZ0001-107X | E.CAPACITOR | 100 | 10V |
| C369 | NEZ0001-107X | E.CAPACITOR | 100 | 10V |
| C370 | NEZ0001-107X | E.CAPACITOR | 100 | 10V |
| C371 | NCB31HK-103X | CER.CAPACITOR | 0.01 | 50V |
| C372 | NEZ0001-107X | E.CAPACITOR | 100 | 10V |
| C373 | NCB31HK-103X | CER.CAPACITOR | 0.01 | 50V |
| C374 | NCB31HK-103X | CER.CAPACITOR | 0.01 | 50V |
| C375 | NEH91CM-476X | E.CAPACITOR | 47 | 16V |
| C376 | NCB31HK-103X | CER.CAPACITOR | 0.01 | 50V |
| C377 | NCB31HK-103X | CER.CAPACITOR | 0.01 | 50V |
| C378 | NEZ0001-107X | E.CAPACITOR | 100 | 10V |
| C379 | NEH90JM-336X | E.CAPACITOR | 33 | 6.3V |
| C381 | NEZ0001-107X | E.CAPACITOR | 100 | 10V |
| C382 | NCB31HK-103X | CER.CAPACITOR | 0.01 | 50V |
| C383 | NFV41CJ-103X | FILM CAPACITOR | 0.01 | 16V |
| C3B4 | NCB31HK-103X | CER.CAPACITOR | 0.01 | 50V |
| C3B5 | NFV41CJ-473X | FILM CAPACITOR | 0.047 | 16V |
| C3B6 | NCF31CZ-104X | CER.CAPACITOR | 0.1 | 16V |
| C387 | NEZ0001-107X | E.CAPACITOR | 100 | 10V |
| C388 | NCS31HJ-270X | CER.CAPACITOR | 27P | 50V |
| C389 | NCB31HK-103X | CER.CAPACITOR | 0.01 | 50V |
| C391 | NCB31HK-103X | CER.CAPACITOR | 0.01 | 50V |
| C392 | NCB31HK-103X | CER.CAPACITOR | 0.01 | 50V |
| C393 | NC831HK-103X | CER.CAPACITOR | 0.01 | 50V |
| C394 | NC831HK-103X | CER.CAPACITOR | 0.01 | 50V |
| C395 | NCB31HK-103X | CER.CAPACITOR | 0.01 | 50V |
| C396 | NEZ0001-107X | E.CAPACITOR | 100 | 10V |
| C397 | NC831HK-103X | CER.CAPACITOR | 0.01 | 50V |
| C398 | NCB31HK-103X | CER.CAPACITOR | 0.01 | 50V |
| C399 | NCB31HK-103X | CER.CAPACITOR | 0.01 | 50V |
| C400 | NCB31HK-103X | CER.CAPACITOR | 0.01 | 50V |
| C401 | NCB31HK-103X | CER.CAPACITOR | 0.01 | 50V |
| C402 | NCB31HK-103X | CER.CAPACITOR | 0.01 | 50V |
| C403 | NCB31HK-103X | CER.CAPACITOR | 0.01 | 50V |
| C404 | NEZ0001-107X | E.CAPACITOR | 100 | 10V |
| C405 | NCS31HJ-271X | CER.CAPACITOR | 270P | 50V |
| C406 | NCS31HJ-121X | CER.CAPACITOR | 120P | 50V |
| C407 | NCF31CZ-104X | CER.CAPACITOR | 0.1 | 16V |
| C40B | NFV41CJ-104X | FILM CAPACITOR | 0.1 | 16V |

[ANA iN]

| Symboi No. | Part No. | Part Nama | Dssoription | |
|---|---|---|---|---|
| C409 | NFV41CJ-104X | FILM CAPACITOR | 0.1 | 16V |
| C410 | NCB31HK-103X | CER.CAPACITOR | 0.01 | 50V |
| C411 | NCF31CZ-104X | CER.CAPACITOR | 0.1 | 16V |
| C412 | NEH91HM-105X | E.CAPACITOR | 1 | 50V |
| C413 | NCB31HK-103X | CER.CAPACITOR | 0.01 | 50V |
| C414 | NCS31HJ-331X | CER.CAPACITOR | 330P | 50V |
| C415 | NCS31HJ-391X | CER.CAPACITOR | 390P | 50V |
| C416 | NCB31HK-103X | CER.CAPACITOR | 0.01 | 50V |
| C417 | NCS31HJ-560X | CER.CAPACITOR | 56P | 50V |
| C418 | NCF31CZ-104X | CER.CAPACITOR | 0.1 | 16V |
| C419 | NCB31HK-103X | CER.CAPACITOR | 0.01 | 50V |
| C420 | NCB31HK-103X | CER.CAPACITOR | 0.01 | 50V |
| C421 | NCB31HK-103X | CER.CAPACITOR | 0.01 | 50V |
| C601 | NCB31HK-103X | CER.CAPACITOR | 0.01 | 50V |
| C602 | NCB31HK-103X | CER.CAPACITOR | 0.01 | 50V |
| C603 | NEZ0001-107X | E.CAPACITOR | 100 | 10V |
| C605 | NEH91EM-475X | E.CAPACITOR | 4.7 | 25V |
| C606 | NCF31CZ-104X | CER.CAPACITOR | 0.1 | 16V |
| C607 | NCB31HK-103X | CER.CAPACITOR | 0.01 | 50V |
| C608 | NCB31HK-103X | CER.CAPACITOR | 0.01 | 50V |
| C610 | NEZ0001-107X | E.CAPACITOR | 100 | 10V |
| C611 | NCB31HK-103X | CER.CAPACITOR | 0.01 | 50V |
| C612 | NEH91EM-475X | E.CAPACITOR | 4.7 | 25V |
| C613 | NCB31HK-103X | CER.CAPACITOR | 0.01 | 50V |
| C614 | NCB31HK-103X | CER.CAPACITOR | 0.01 | 50V |
| C615 | NEZ0001-107X | E.CAPACITOR | 100 | 10V |
| C617 | NEH91EM-475X | E.CAPACITOR | 4.7 | 25V |
| C618 | NCB31HK-103X | CER.CAPACITOR | 0.01 | 50V |
| C619 | NCF31CZ-104X | CER.CAPACITOR | 0.1 | 16V |
| C620 | NCB31HK-103X | CER.CAPACITOR | 0.01 | 50V |
| C622 | NEZ0001-107X | E.CAPACITOR | 100 | 10V |
| C623 | NCB31HK-103X | CER.CAPACITOR | 0.01 | 50V |
| C624 | NEH91EM-475X | E.CAPACITOR | 4.7 | 25V |
| C625 | NCB31HK-103X | CER.CAPACITOR | 0.01 | 50V |
| C626 | NCB31HK-103X | CER.CAPACITOR | 0.01 | 50V |
| C627 | NEZ0001-107X | E.CAPACITOR | 100 | 10V |
| C629 | NEH91EM-475X | E.CAPACITOR | 4.7 | 25V |
| C630 | NCB31HK-103X | CER.CAPACITOR | 0.01 | 50V |
| C631 | NCF31CZ-104X | CER.CAPACITOR | 0.1 | 16V |
| C632 | NCB31HK-103X | CER.CAPACITOR | 0.01 | 50V |
| C634 | NEZ0001-107X | E.CAPACITOR | 100 | 10V |
| C635 | NCB31HK-103X | CER.CAPACITOR | 0.01 | 50V |
| C636 | NEH91EM-475X | E.CAPACITOR | 4.7 | 25V |
| C637 | NCB31HK-103X | CER.CAPACITOR | 0.01 | 50V |
| C638 | NCB31HK-103X | CER.CAPACITOR | 0.01 | 50V |
| C639 | NEZ0001-107X | E.CAPACITOR | 100 | 10V |
| C640 | NCB31HK-103X | CER.CAPACITOR | 0.01 | 50V |
| C641 | NCB31HK-103X | CER.CAPACITOR | 0.01 | 50V |
| C642 | NCB31HK-103X | CER.CAPACITOR | 0.01 | 50V |
| C643 | NCB31HK-103X | CER.CAPACITOR | 0.01 | 50V |
| C645 | NCB31HK-103X | CER.CAPACITOR | 0.01 | 50V |
| C646 | NCB31HK-103X | CER.CAPACITOR | 0.01 | 50V |
| C647 | NCB31HK-103X | CER.CAPACITOR | 0.01 | 50V |
| C64B | NCB31HK-103X | CER.CAPACITOR | 0.01 | 50V |
| C649 | NCB31HK-103X | CER.CAPACITOR | 0.01 | 50V |
| C650 | NEZ0001-107X | E.CAPACITOR | 100 | 10V |
| C651 | NCB31HK-103X | CER.CAPACITOR | 0.01 | 50V |
| C652 | NCB31HK-103X | CER.CAPACITOR | 0.01 | 50V |
| C653 | NCB31HK-103X | CER.CAPACITOR | 0.01 | 50V |

| Symbcl No. | Part No. | Part Nsms | Doscription | |
|---|---|---|---|---|
| C654 | NCB31HK-103X | CER.CAPACITOR | 0.01 | 50V |
| C655 | NCB31HK-103X | CER.CAPACITOR | 0.01 | 50V |
| C656 | NCB31HK-103X | CER.CAPACITOR | 0.01 | 50V |
| C657 | NCB31HK-103X | CER.CAPACITOR | 0.01 | 50V |
| C658 | NCB31HK-103X | CER.CAPACITOR | 0.01 | 50V |
| C659 | NEZ0001-107X | E.CAPACITOR | 100 | |
| C660 | NCB31HK-103X | CER.CAPACITOR | 0.01 | 50V |
| C662 | NCB31HK-103X | CER.CAPACITOR | 0.01 | 50V |
| C663 | NCB31HK-103X | CER.CAPACITOR | 0.01 | 50V |
| C664 | NCB31HK-103X | CER.CAPACITOR | 0.01 | 50V |
| C665 | NCB31HK-103X | CER.CAPACITOR | 0.01 | 50V |
| C665 | NEH90JM-107X | E.CAPACITOR | 100 | 6.3V |
| C667 | NCB31HK-103X | CER.CAPACITOR | 0.01 | 50V |
| C668 | NBE21EM-474X | TAN.CAPACITOR | 0.47 | 25V |
| C669 | NCS31HJ-6R0X | CER.CAPACITOR | 6P | 50V |
| C670 | NCS31HJ-100X | CER.CAPACITOR | 10P | 50V |
| C671 | NCB31HK-103X | CER.CAPACITOR | 0.01 | 50V |
| C672 | NCS31HJ-100X | CER.CAPACITOR | 10P | 50V |
| C673 | NCS31HJ-101X | CER.CAPACITOR | 100P | 50V |
| C674 | NCF31CZ-104X | CER.CAPACITOR | 0.1 | 16V |
| C675 | NCB31HK-103X | CER.CAPACITOR | 0.01 | 50V |
| C676 | NCB31HK-103X | CER.CAPACITOR | 0.01 | 50V |
| C677 | NCB31HK-103X | CER.CAPACITOR | 0.01 | 50V |
| C67B | NCB31HK-103X | CER.CAPACITOR | 0.01 | 50V |
| C679 | NCB31HK-103X | CER.CAPACITOR | 0.01 | 50V |
| C680 | NEH91CM-476X | E.CAPACITOR | 47 | 15V |
| C681 | NCB31HK-103X | CER.CAPACITOR | 0.01 | 50V |
| C682 | NCB31HK-103X | CER.CAPACITOR | 0.01 | 50V |
| C683 | NEZ0001-107X | E.CAPACITOR | 100 | 10V |
| C684 | NCB31HK-103X | CER.CAPACITOR | 0.01 | 50V |
| C685 | NCB31HK-103X | CER.CAPACITOR | 0.01 | 50V |
| C6B6 | NEH91CM-476X | E.CAPACITOR | 47 | 16V |
| C687 | NCB31HK-103X | CER.CAPACITOR | 0.01 | 50V |
| C6BB | NCB31HK-103X | CER.CAPACITOR | 0.01 | 50V |
| C689 | NFV41CJ-104X | FILM CAPACITOR | 0.1 | 16V |
| C690 | NCB31HK-103X | CER.CAPACITOR | 0.01 | 50V |
| C691 | NCF31CZ-104X | CER.CAPACITOR | 0.1 | 16V |
| C692 | NCS31HJ-470X | CER.CAPACITOR | 47P | 50V |
| C693 | NCS31HJ-151X | CER.CAPACITOR | 150P | 50V |
| C694 | NCB31HK-103X | CER.CAPACITOR | 0.01 | 50V |
| C695 | NCB31HK-103X | CER.CAPACITOR | 0.01 | 50V |
| C696 | NCB31HK-103X | CER.CAPACITOR | 0.01 | 50V |
| C697 | NCS31EJ-102X | CER.CAPACITOR | 1000P | 25V |
| C69B | NCB31HK-103X | CER.CAPACITOR | 0.01 | 50V |
| C699 | NEZ0001-107X | E.CAPACITOR | 100 | 10V |
| C700 | NCB31HK-103X | CER.CAPACITOR | 0.01 | 50V |
| C701 | NCB31HK-103X | CER.CAPACITOR | 0.01 | 50V |
| C702 | NCB31HK-103X | CER.CAPACITOR | 0.01 | 50V |
| C703 | NCB31HK-103X | CER.CAPACITOR | 0.01 | 50V |
| C704 | NCB31HK-103X | CER.CAPACITOR | 0.01 | 50V |
| C705 | NCB31HK-103X | CER.CAPACITOR | 0.01 | 50V |
| C706 | NCB31HK-103X | CER.CAPACITOR | 0.01 | 50V |
| C711 | NCB31HK-103X | CER.CAPACITOR | 0.01 | 50V |
| C712 | NCB31HK-103X | CER.CAPACITOR | 0.01 | 50V |
| C713 | NCB31HK-103X | CER.CAPACITOR | 0.01 | 50V |
| C714 | NCB31HK-103X | CER.CAPACITOR | 0.01 | 50V |
| C715 | NCB31HK-103X | CER.CAPACITOR | 0.01 | 50V |

| Symbol No. | Part No. | Part Name | Description |
|---|---|---|---|
| VC1 | NAT3112-300RZ | TRIM.CAPACITOR | 30P DEC VOL |
| L1 | NQL024J-5R6X | COIL | 5.6μH |
| L2 | NQL024J-100X | COIL | 10μH |
| L3 | NQL024J-180X | COIL | 18μH |
| L4 | NQL024J-5R6X | COIL | 5.6μH |
| L5 | NQL024J-100X | COIL | 10μH |
| L6 | NQL024J-180X | COIL | 18μH |
| L7 | NOL024J-180X | COIL | 18μH |
| L601 | NOL024J-1R2X | COIL | 1.2μH |
| LC1 | PGZ01972Z | LC FILTER | |
| LC2 | PGZ01972Z | LC FILTER | |
| LC301 | PGZ01972Z | LC FILTER | |
| LC601 | PGZ01972Z | LC FILTER | |
| LC602 | PGZ01972Z | LC FILTER | |
| LC603 | PGZ01972Z | LC FILTER | |
| LC604 | PGZ01972Z | LC FILTER | |
| LC605 | PGZ01972Z | LC FILTER | |
| LC606 | PGZ01972Z | LC FILTER | |
| LC607 | PGZ01972Z | LC FILTER | |
| DL301 | PGZ02184-Z | DELAY LINE | 120nS |
| DL302 | PGZ02184-Z | DELAY LINE | 120nS |
| X1 | PGZ02043 | CRYSTAL | 17.734475MHz |
| CN1 | PGZ02142-120 | CONNECTOR | 120PIN |
| CN2 | PGZ02142-100 | CONNECTOR | 100PIN |
| TP1 | SCV1880-001 | TEST POINT | |
| TP2 | SCV1B80-001 | TEST POINT | |
| TP3 | SCV1880-001 | TEST POINT | |
| TP4 | SCV1880-001 | TEST POINT | |
| TP5 | SCV1880-001 | TEST POINT | |
| TP6 | SCV1880-001 | TEST POINT | |
| TP7 | SCV1880-001 | TEST POINT | |
| TP8 | SCV1880-001 | TEST POINT | |
| TP9 | SCV1880-001 | TEST POINT | |
| TP10 | SCV1B80-001 | TEST POINT | |
| TP11 | SCV1880-001 | TEST POINT | |
| TP12 | SCV1880-001 | TEST POINT | |
| TP13 | SCV1880-001 | TEST POINT | |
| TP14 | SCV1880-001 | TEST POINT | |
| TP15 | SCV1880-001 | TEST POINT | |
| TP16 | SCV1880-001 | TEST POINT | |
| TP17 | SCV1880-001 | TEST POINT | |
| TP18 | SCV1880-001 | TEST POINT | |
| TP19 | SCV1880-001 | TEST POINT | |
| TP20 | SCV1880-001 | TEST POINT | |
| TP21 | SCV1880-001 | TEST POINT | |
| TP22 | SCV1880-001 | TEST POINT | |
| TP23 | SCV1880-001 | TEST POINT | |
| TP51 | SCV1880-001 | TEST POINT | |
| TP52 | SCV1880-001 | TEST POINT | |
| TP53 | SCV1880-001 | TEST POINT | |
| TP54 | SCV1880-001 | TEST POINT | |

| Symbol No. | Part No. | Part Name | Description |
|---|---|---|---|
| TP55 | SCV1880-001 | TEST POINT | |
| TP56 | SCV1880-001 | TEST POINT | |
| TP57 | SCV1880-001 | TEST POINT | |
| TP301 | SCV1880-001 | TEST POINT | |
| TP302 | SCV1880-001 | TEST POINT | |
| TP303 | SCV1880-001 | TEST POINT | |
| TP304 | SCV1880-001 | TEST POINT | |
| TP305 | SCV1880-001 | TEST POINT | |
| TP306 | SCV1880-001 | TEST POINT | |
| TP307 | SCV1880-001 | TEST POINT | |
| TP308 | SCV1880-001 | TEST POINT | |
| TP309 | SCV1880-001 | TEST POINT | |
| TP310 | SCV1880-001 | TEST POINT | |
| TP311 | SCV1880-001 | TEST POINT | |
| TP312 | SCV1B80-001 | TEST POINT | |
| TP313 | SCV1880-001 | TEST POINT | |
| TP314 | SCV1B80-001 | TEST POINT | |
| TP351 | SCV1880-001 | TEST POINT | |
| TP352 | SCV1880-001 | TEST POINT | |
| TP353 | SCV1880-001 | TEST POINT | |
| TP354 | SCV1880-001 | TEST POINT | |
| TP355 | SCV1880-001 | TEST POINT | |
| TP356 | SCV1880-001 | TEST POINT | |
| TP357 | SCV1880-001 | TEST POINT | |
| TP602 | SCV1B80-001 | TEST POINT | |
| TP603 | SCV1880-001 | TEST POINT | |
| TP604 | SCV1880-001 | TEST POINT | |
| TP681 | SCV1880-001 | TEST POINT | |
| TP682 | SCV1880-001 | TEST POINT | |
| FL1 | PGZ02196 | FL FILTER | 5.75MHz LPF |
| FL301 | PGZ021B1 | FL FILTER | 2.5MHz LPF |
| FL302 | PGZ02181 | FL FILTER | 2.5MHz LPF |
| FL303 | PELN0320 | FL FILTER | 50MHz LPF |
| K1 | PGZ00627Z | FERRITE BEADS | |
| K2 | PGZ00627Z | FERRITE BEADS | |
| K601 | PGZ00627Z | FERRITE BEADS | |
| K602 | PGZ00627Z | FERRITE BEADS | |
| K603 | PGZ00627Z | FERRITE BEADS | |
| TB1 | PGZ02228 | EARTH LUG | |
| TB2 | PGZ02228 | EARTH LUG | |
| TB3 | PGZ0222S | EARTH LUG | |
| TB4 | PGZ0222B | EARTH LUG | |

## 0.S OUT/OEN BOARD ASSEMBLY LIST [1][7]

**SLK1027-E1A** [1][7]□□□□□□

| Symbol No. | Pert No. | Pert Nsme | Description |
|---|---|---|---|
| IC1 | MC14577CF-X | I.C.(M) | MOTOROLA |
| IC2 | UPC311G2-X | I.C.(M) | NEC |
| IC3 | TC7W02F-X | I.C.(M) | TOSHIBA |
| IC4 | UPC78L05T-X | I.C.(M) | NEC |
| IC5 | NJM79L05UA-X | I.C.(M) | JRC |
| IC6 | EL4583CS-X | I.C.(M) | ELANTEC |
| IC7 | TC7W04F-X | I.C.(M) | TOSHIBA |
| IC8 | UPC78L05T-X | I.C.(M) | NEC |
| IC9 | TC74VHC123AF-X | I.C.(M) | TOSHIBA |
| IC10 | UPC4082G2-X | I.C.(M) | NEC |
| IC11 | TC74VHC123AF-X | I.C.(M) | TOSHIBA |
| IC12 | UPC78L12T-W | I.C.(M) | NEC |
| IC13 | UPC78L05T-X | I.C.(M) | NEC |
| IC14 | NJM79L05UA-X | I.C.(M) | JRC |
| IC15 | UPC358G2-X | I.C.(M) | NEC |
| IC16 | CXD1216M-X | I.C.(M) | SONY |
| IC17 | TC4W53F-X | I.C.(M) | TOSHIBA |
| IC18 | CXD1217M-X | I.C.(M) | SONY |
| IC19 | TC74VHC163F-X | I.C.(M) | TOSHIBA |
| IC20 | UPC78L05T-X | I.C.(M) | NEC |
| IC21 | NJM79L05UA-X | I.C.(M) | JRC |
| IC22 | TC74VHC153F-X | I.C.(M) | TOSHIBA |
| IC23 | UPC358G2-X | I.C.(M) | NEC |
| IC24 | TC7W74F-X | I.C.(M) | TOSHI8A |
| IC301 | UPC4074G2-X | I.C.(M) | NEC |
| IC302 | UPC78L12T-W | I.C.(M) | NEC |
| IC303 | UPC78L05T-X | I.C.(M) | NEC |
| IC304 | TC74VHC123AF-X | I.C.(M) | TOSHIBA |
| IC305 | TC74VHC123AF-X | I.C.(M) | TOSHI8A |
| IC306 | AN77L03M-X | I.C.(M) | MATSUSHITA |
| IC307 | TC74VHC244F-X | I.C.(M) | TOSHIBA |
| IC308 | TC4W53F-X | I.C.(M) | TOSHIBA |
| IC309 | UPC2384GA | I.C.(M) | NEC |
| IC310 | TC7W00F-X | I.C.(M) | TOSHIBA |
| IC311 | CXA1211M-X | I.C.(M) | SONY |
| IC312 | TC74HC4053AF-X | I.C.(M) | TOSHI8A |
| IC313 | UPC78L05T-X | I.C.(M) | NEC |
| IC314 | NJM79L05UA-X | I.C.(M) | JRC |
| IC315 | JCL0024 | I.C.(M) | JVC |
| IC316 | DS90C031TM-X | I.C.(M) | NS |
| IC317 | TC74ACT541F-X | I.C.(M) | TOSHIBA |
| IC318 | TD74BC541F-X | I.C.(M) | TOSHI8A |
| IC319 | TD74BC541F-X | I.C.(M) | TOSHIBA |
| IC320 | TC74ACT541F-X | I.C.(M) | TOSHI8A |
| IC321 | M51957BFP-X | I.C.(M) | MITSUBISHI |
| IC322 | TC74VHC244F-X | I.C.(M) | TOSHIBA |
| IC323 | 74ACT574SJ-X | I.C.(M) | NS |
| IC601 | TC4W53F-X | I.C.(M) | TOSHIBA |
| IC602 | UPC4082G2-X | I.C.(M) | NEC |
| IC603 | LM6361M-X | I.C.(M) | TEXAS |
| IC604 | UPC78L12T-W | I.C.(M) | NEC |
| IC605 | NJM79L05UA-X | I.C.(M) | JRC |
| IC606 | TC4W53F-X | I.C.(M) | TOSHI8A |
| IC607 | UPC4082G2-X | I.C.(M) | NEC |
| IC608 | LM6361M-X | I.C.(M) | TEXAS |
| IC609 | UPC78L05T-X | I.C.(M) | NEC |
| IC610 | UPC78L12T-W | I.C.(M) | NEC |
| IC611 | NJM79L05UA-X | I.C.(M) | JRC |
| IC612 | TC4W53F-X | I.C.(M) | TOSHIBA |
| IC613 | UPC4082G2-X | I.C.(M) | NEC |

| Symbol No. | Pert No. | Pert Neme | Description |
|---|---|---|---|
| IC614 | LM6361M-X | I.C.(M) | TEXAS |
| IC615 | UPC78L12T-W | I.C.(M) | NEC |
| IC616 | NJM79L05UA-X | I.C.(M) | JRC |
| IC617 | TC4W53F-X | I.C.(M) | TOSHIBA |
| IC618 | UPC4082G2-X | I.C.(M) | NEC |
| IC619 | LM6361M-X | I.C.(M) | TEXAS |
| IC620 | UPC78L05T-X | I.C.(M) | NEC |
| IC621 | UPC78L12T-W | I.C.(M) | NEC |
| IC622 | NJM79L05UA-X | I.C.(M) | JRC |
| IC623 | MM1111XF-W | I.C.(M) | MITUMI |
| IC624 | UPC78L12T-W | I.C.(M) | NEC |
| IC625 | TC4W53F-X | I.C.(M) | TOSHIBA |
| IC626 | UPC4082G2-X | I.C.(M) | NEC |
| IC627 | LM6361M-X | I.C.(M) | TEXAS |
| IC628 | UPC78L05T-X | I.C.(M) | NEC |
| IC629 | UPC78L12T-W | I.C.(M) | NEC |
| IC630 | NJM79L05UA-X | I.C.(M) | JRC |
| IC631 | LM6361M-X | I.C.(M) | TEXAS |
| IC632 | UPC78L12T-W | I.C.(M) | NEC |
| IC633 | NJM79L05UA-X | I.C.(M) | JRC |
| IC634 | TC4W53F-X | I.C.(M) | TOSHIBA |
| IC635 | NJM79L05UA-X | I.C.(M) | JRC |
| Q1 | 2SC4081/QR/-W | TRANSISTOR | ROHM |
| Q2 | 2SA1576A/QRS/-X | TRANSISTOR | ROHM |
| Q3 | 2SA1576A/QRS/-X | TRANSISTOR | ROHM |
| Q4 | 2SC4081/QR/-W | TRANSISTOR | ROHM |
| Q5 | 2SK665-W | FET | MATSUSHITA |
| Q7 | 2SC4081/QR/-W | TRANSISTOR | ROHM |
| Q8 | 2SC4081/QR/-W | TRANSISTOR | ROHM |
| Q9 | DTC124EUA-X | TRANSISTOR | ROHM |
| Q10 | 2SC4081/OR/-W | TRANSISTOR | ROHM |
| Q11 | 2SC4081/OR/-W | TRANSISTOR | ROHM |
| Q12 | 2SK665-W | FET | MATSUSHITA |
| Q13 | 2SA1576A/ORS/-X | TRANSISTOR | ROHM |
| Q14 | 2SC4081/QR/-W | TRANSISTOR | ROHM |
| Q15 | 2SA1576A/ORS/-X | TRANSISTOR | ROHM |
| Q16 | 2SC4081/QR/-W | TRANSISTOR | ROHM |
| Q17 | 2SC4081/OR/-W | TRANSISTOR | ROHM |
| Q18 | 2SC4081/OR/-W | TRANSISTOR | ROHM |
| Q19 | 2SA1576A/ORS/-X | TRANSISTOR | ROHM |
| Q301 | 2SK665-W | FET | MATSUSHITA |
| Q302 | 2SC4081/QR/-W | TRANSISTOR | ROHM |
| Q303 | 2SC4081/OR/-W | TRANSISTOR | ROHM |
| Q304 | 2SC4081/QR/-W | TRANSISTOR | ROHM |
| Q306 | 2SA1576A/ORS/-X | TRANSISTOR | ROHM |
| Q307 | 2SA1576A/ORS/-X | TRANSISTOR | ROHM |
| Q308 | 2SA1576A/ORS/-X | TRANSISTOR | ROHM |
| Q601 | 2SC4081/QR/-W | TRANSISTOR | ROHM |
| Q602 | 2SC4081/QR/-W | TRANSISTOR | ROHM |
| Q603 | 2SC4081/QR/-W | TRANSISTOR | ROHM |
| Q604 | 2SA1576A/ORS/-X | TRANSISTOR | ROHM |
| Q605 | 2SC4081/QR/-W | TRANSISTOR | ROHM |
| Q606 | 2SC40B1/OR/-W | TRANSISTOR | ROHM |
| Q607 | 2SC4081/OR/-W | TRANSISTOR | ROHM |
| Q608 | 2SC40B1/QR/-W | TRANSISTOR | ROHM |
| Q609 | 2SA1576A/ORS/-X | TRANSISTOR | ROHM |
| Q610 | 2SC4081/OR/-W | TRANSISTOR | ROHM |
| Q611 | 2SC4081/QR/-W | TRANSISTOR | ROHM |

| Symbol No. | Psrt No. | Psrt Nsms | Doscription | |
|---|---|---|---|---|
| Q612 | 2SC4081/QR/-W | TRANSISTOR | ROHM | |
| Q613 | 2SC4081/QR/-W | TRANSISTOR | ROHM | |
| Q614 | 2SA1576A/ORS/-X | TRANSISTOR | ROHM | |
| Q615 | 2SC4081/QR/-W | TRANSISTOR | ROHM | |
| Q616 | 2SC4081/QR/-W | TRANSISTOR | ROHM | |
| Q617 | 2SC4081/QR/-W | TRANSISTOR | ROHM | |
| Q618 | 2SC4081/QR/-W | TRANSISTOR | ROHM | |
| Q619 | 2SA1576A/ORS/-X | TRANSISTOR | ROHM | |
| Q620 | 2SC4081/QR/-W | TRANSISTOR | ROHM | |
| Q621 | 2SC4081/QR/-W | TRANSISTOR | ROHM | |
| Q622 | 2SC4081/QR/-W | TRANSISTOR | ROHM | |
| Q623 | 2SC4081/QR/-W | TRANSISTOR | ROHM | |
| Q624 | 2SC4081/QR/-W | TRANSISTOR | ROHM | |
| Q625 | 2SC4081/QR/-W | TRANSISTOR | ROHM | |
| Q626 | 2SC4081/QR/-W | TRANSISTOR | ROHM | |
| Q627 | 2SC4081/QR/-W | TRANSISTOR | ROHM | |
| Q628 | 2SC4081/QR/-W | TRANSISTOR | ROHM | |
| Q629 | 2SC4081/QR/-W | TRANSISTOR | ROHM | |
| Q630 | 2SC4081/QR/-W | TRANSISTOR | ROHM | |
| Q631 | 2SC4081/QR/-W | TRANSISTOR | ROHM | |
| Q632 | 2SC4081/QR/-W | TRANSISTOR | ROHM | |
| Q633 | 2SA1576A/QRS/-X | TRANSISTOR | ROHM | |
| Q634 | 2SC4081/QR/-W | TRANSISTOR | ROHM | |
| Q635 | 2SA1576A/QRS/-X | TRANSISTOR | ROHM | |
| Q636 | 2SC4081/QR/-W | TRANSISTOR | ROHM | |
| Q637 | 2SC4081/QR/-W | TRANSISTOR | ROHM | |
| Q638 | 2SC4081/QR/-W | TRANSISTOR | ROHM | |
| Q639 | 2SC4081/QR/-W | TRANSISTOR | ROHM | |
| Q640 | 2SC4081/QR/-W | TRANSISTOR | ROHM | |
| Q641 | 2SA1576A/ORS/-X | TRANSISTOR | ROHM | |
| Q642 | 2SC4081/QR/-W | TRANSISTOR | ROHM | |
| Q643 | DTC124EUA-X | TRANSISTOR | ROHM | |
| Q644 | 2SC4081/QR/-W | TRANSISTOR | ROHM | |
| Q645 | 2SA1576A/QRS/-X | TRANSISTOR | ROHM | |
| Q646 | 2SC4081/QR/-W | TRANSISTOR | ROHM | |
| Q647 | 2SA1576A/ORS/-X | TRANSISTOR | ROHM | |
| Q648 | 2SC4081/QR/-W | TRANSISTOR | ROHM | |
| Q649 | 2SC4081/QR/-W | TRANSISTOR | ROHM | |
| Q650 | 2SC4081/QR/-W | TRANSISTOR | ROHM | |
| Q651 | 2SC4081/QR/-W | TRANSISTOR | ROHM | |
| Q652 | 2SC4081/QR/-W | TRANSISTOR | ROHM | |
| Q653 | 2SC4081/QR/-W | TRANSISTOR | ROHM | |
| Q654 | 2SC4081/QR/-W | TRANSISTOR | ROHM | |
| D1 | DA204U-X | DIODE | ROHM | |
| D3 | DAN202U-X | DIODE | ROHM | |
| D302 | IMN10-X | D.ARRAY | ROHM | |
| D303 | IMN10-X | D.ARRAY | ROHM | |
| D305 | DAP202U-X | DIODE | ROHM | |
| D601 | DAP202U-X | DIODE | ROHM | |
| D602 | DAP202U-X | DIODE | ROHM | |
| R1 | NRSA63J-333X | M.G.RESISTOR | 33k | 1/16W |
| R2 | NRSA63J-473X | M.G.RESISTOR | 47k | 1/16W |
| R3 | NRSA63J-122X | M.G.RESISTOR | 1.2k | 1/16W |
| R4 | NRSA63J-272X | M.G.RESISTOR | 2.7k | 1/16W |
| R5 | NRSA63J-222X | M.G.RESISTOR | 2.2k | 1/16W |
| R6 | NRSA63J-181X | M.G.RESISTOR | 180 | 1/16W |
| R7 | NRSA63J-102X | M.G.RESISTOR | 1k | 1/16W |

| Symbol No. | Psrt No. | Psrt Nsmo | Desoription | |
|---|---|---|---|---|
| R8 | NRSA63J-561X | M.G.RESISTOR | 560 | 1/16W |
| R9 | NRSA63J-561X | M.G.RESISTOR | 560 | 1/16W |
| R10 | NRSA63J-101X | M.G.RESISTOR | 100 | 1/16W |
| R11 | NRSA63J-272X | M.G.RESISTOR | 2.7k | 1/16W |
| R12 | NRSA63J-151X | M.G.RESISTOR | 150 | 1/16W |
| R13 | NRSA63J-272X | M.G.RESISTOR | 2.7k | 1/16W |
| R14 | NRSA63J-151X | M.G.RESISTOR | 150 | 1/16W |
| R15 | NRSA63J-152X | M.G.RESISTOR | 1.5k | 1/16W |
| R16 | NRSA63J-471X | M.G.RESISTOR | 470 | 1/16W |
| R17 | NRSA63J-471X | M.G.RESISTOR | 470 | 1/16W |
| R18 | NRSA63J-102X | M.G.RESISTOR | 1k | 1/16W |
| R19 | NRSA63J-561X | M.G.RESISTOR | 560 | 1/16W |
| R20 | NRSA63J-333X | M.G.RESISTOR | 33k | 1/16W |
| R21 | NRSA63J-223X | M.G.RESISTOR | 22k | 1/16W |
| R22 | NRSA63J-152X | M.G.RESISTOR | 1.5k | 1/16W |
| R23 | NRSA63J-821X | M.G.RESISTOR | 820 | 1/16W |
| R24 | NRSA63J-332X | M.G.RESISTOR | 3.3k | 1/16W |
| R25 | NRSA63J-331X | M.G.RESISTOR | 330 | 1/16W |
| R26 | NRSA63J-153X | M.G.RESISTOR | 15k | 1/16W |
| R27 | NRSA63J-182X | M.G.RESISTOR | 1.8k | 1/16W |
| R28 | NRSA63J-182X | M.G.RESISTOR | 1.8k | 1/16W |
| R29 | NRSA63J-181X | M.G.RESISTOR | 180 | 1/16W |
| R30 | NRSA63J-394X | M.G.RESISTOR | 390k | 1/16W |
| R31 | NRSA63J-273X | M.G.RESISTOR | 27k | 1/16W |
| R32 | NRSA63J-102X | M.G.RESISTOR | 1k | 1/16W |
| R33 | NRSA63J-101X | M.G.RESISTOR | 100 | 1/16W |
| R34 | NRSA63J-101X | M.G.RESISTOR | 100 | 1/16W |
| R35 | NRSA63J-101X | M.G.RESISTOR | 100 | 1/16W |
| R36 | NRSA63J-272X | M.G.RESISTOR | 2.7k | 1/16W |
| R37 | NRSA63J-102X | M.G.RESISTOR | 1k | 1/16W |
| R38 | NRSA63J-102X | M.G.RESISTOR | 1k | 1/16W |
| R39 | NRSA63J-272X | M.G.RESISTOR | 2.7k | 1/16W |
| R40 | NRSA63J-223X | M.G.RESISTOR | 22k | 1/16W |
| R41 | NRSA63J-563X | M.G.RESISTOR | 56k | 1/16W |
| R42 | NRSA63J-101X | M.G.RESISTOR | 100 | 1/16W |
| R43 | NRSA63J-101X | M.G.RESISTOR | 100 | 1/16W |
| R44 | NRSA63J-684X | M.G.RESISTOR | 680k | 1/16W |
| R45 | NRSA63J-472X | M.G.RESISTOR | 4.7k | 1/16W |
| R46 | NRSA63J-101X | M.G.RESISTOR | 100 | 1/16W |
| R47 | NRSA63J-101X | M.G.RESISTOR | 100 | 1/16W |
| R48 | NRSA63J-103X | M.G.RESISTOR | 10k | 1/16W |
| R49 | NRSA63J-472X | M.G.RESISTOR | 4.7k | 1/16W |
| R51 | NRSA63J-0R0X | M.G.RESISTOR | 0 | 1/16W |
| R52 | NRSA63J-273X | M.G.RESISTOR | 27k | 1/16W |
| R53 | NRSA63J-101X | M.G.RESISTOR | 100 | 1/16W |
| R54 | NRSA63J-223X | M.G.RESISTOR | 22k | 1/16W |
| R57 | NRSA63J-103X | M.G.RESISTOR | 10k | 1/16W |
| R58 | NRSA63J-103X | M.G.RESISTOR | 10k | 1/16W |
| R60 | NRSA63J-332X | M.G.RESISTOR | 3.3k | 1/16W |
| R61 | NRSA63J-821X | M.G.RESISTOR | 820 | 1/16W |
| R62 | NRSA63J-333X | M.G.RESISTOR | 33k | 1/16W |
| R63 | NRSA63J-682X | M.G.RESISTOR | 6.8k | 1/16W |
| R64 | NRSA63J-222X | M.G.RESISTOR | 2.2k | 1/16W |
| R65 | NRSA63J-102X | M.G.RESISTOR | 1k | 1/16W |
| R66 | NRSA63J-103X | M.G.RESISTOR | 10k | 1/16W |
| R67 | NRVA63D-333X | C.M.F.RESISTOR | 33k | 1/16W |
| R68 | NRSA63J-102X | M.G.RESISTOR | 1k | 1/16W |
| R69 | NRSA63J-0R0X | M.G.RESISTOR | 0 | 1/16W |
| R71 | NRSA63J-472X | M.G.RESISTOR | 4.7k | 1/16W |

[OUT/GEN]

| Symbol No. | Part No. | Part Nama | Dascription | |
|---|---|---|---|---|
| R72 | NRVA63D-102X | C.M.F.RESISTOR | 1k | 1/16W |
| R73 | NRVA63D-333X | C.M.F.RESISTOR | 33k | 1/16W |
| R74 | NRSA63J-101X | M.G.RESISTOR | 100 | 1/16W |
| R75 | NRSA63J-0R0X | M.G.RESISTOR | 0 | 1/16W |
| R76 | NRSA63J-472X | M.G.RESISTOR | 4.7k | 1/16W |
| R78 | NRSA63J-102X | M.G.RESISTOR | 1k | 1/16W |
| R79 | NRSA63J-102X | M.G.RESISTOR | 1k | 1/16W |
| R80 | NRSA63J-102X | M.G.RESISTOR | 1k | 1/16W |
| R82 | NRSA63J-393X | M.G.RESISTOR | 39k | 1/16W |
| R83 | NRSA63J-472X | M.G.RESISTOR | 4.7k | 1/16W |
| R84 | NRSA63J-105X | M.G.RESISTOR | 1M | 1/16W |
| R85 | NRSA63J-101X | M.G.RESISTOR | 100 | 1/16W |
| R86 | NRSA63J-105X | M.G.RESISTOR | 1M | 1/16W |
| R87 | NRSA63J-101X | M.G.RESISTOR | 100 | 1/16W |
| R88 | NRSA63J-333X | M.G.RESISTOR | 33k | 1/16W |
| R89 | NRSA63J-333X | M.G.RESISTOR | 33k | 1/16W |
| R90 | NRSA63J-101X | M.G.RESISTOR | 100 | 1/16W |
| R91 | NRSA63J-101X | M.G.RESISTOR | 100 | 1/16W |
| R92 | NRSA63J-101X | M.G.RESISTOR | 100 | 1/16W |
| R93 | NRSA63J-101X | M.G.RESISTOR | 100 | 1/16W |
| R94 | NRSA63J-101X | M.G.RESISTOR | 100 | 1/16W |
| R95 | NRSA63J-101X | M.G.RESISTOR | 100 | 1/16W |
| R96 | NRSA63J-101X | M.G.RESISTOR | 100 | 1/16W |
| R97 | NRSA63J-101X | M.G.RESISTOR | 100 | 1/16W |
| R98 | NRSA63J-101X | M.G.RESISTOR | 100 | 1/16W |
| R99 | NRSA63J-101X | M.G.RESISTOR | 100 | 1/16W |
| R100 | NRSA63J-101X | M.G.RESISTOR | 100 | 1/16W |
| R101 | NRSA63J-101X | M.G.RESISTOR | 100 | 1/16W |
| R102 | NRSA63J-101X | M.G.RESISTOR | 100 | 1/16W |
| R104 | NRSA63J-101X | M.G.RESISTOR | 100 | 1/16W |
| R105 | NRSA63J-103X | M.G.RESISTOR | 10k | 1/16W |
| R108 | NRSA63J-0R0X | M.G.RESISTOR | 0 | 1/16W |
| R109 | NRSA63J-333X | M.G.RESISTOR | 33k | 1/16W |
| R110 | NRSA63J-153X | M.G.RESISTOR | 15k | 1/16W |
| R111 | NRSA63J-152X | M.G.RESISTOR | 1.5k | 1/16W |
| R112 | NRSA63J-152X | M.G.RESISTOR | 1.5k | 1/16W |
| R113 | NRSA63J-272X | M.G.RESISTOR | 2.7k | 1/16W |
| R114 | NRSA63J-272X | M.G.RESISTOR | 2.7k | 1/16W |
| R115 | NRSA63J-562X | M.G.RESISTOR | 5.6k | 1/16W |
| R116 | NRSA63J-153X | M.G.RESISTOR | 15k | 1/16W |
| R117 | NRSA63J-562X | M.G.RESISTOR | 5.6k | 1/16W |
| R118 | NRSA63J-153X | M.G.RESISTOR | 15k | 1/16W |
| R119 | NRSA63J-102X | M.G.RESISTOR | 1k | 1/16W |
| R120 | NRSA63J-102X | M.G.RESISTOR | 1k | 1/16W |
| R121 | NRSA63J-102X | M.G.RESISTOR | 1k | 1/16W |
| R122 | NRSA63J-101X | M.G.RESISTOR | 100 | 1/16W |
| R123 | NRSA63J-101X | M.G.RESISTOR | 100 | 1/16W |
| R124 | NRSA63J-101X | M.G.RESISTOR | 100 | 1/16W |
| R126 | NRSA63J-102X | M.G.RESISTOR | 1k | 1/16W |
| R127 | NRSA63J-153X | M.G.RESISTOR | 15k | 1/16W |
| R128 | NRSA63J-153X | M.G.RESISTOR | 15k | 1/16W |
| R301 | NRSA63J-102X | M.G.RESISTOR | 1k | 1/16W |
| R302 | NRSA63J-333X | M.G.RESISTOR | 33k | 1/16W |
| R303 | NRSA63J-822X | M.G.RESISTOR | 8.2k | 1/16W |
| R304 | NRSA63J-273X | M.G.RESISTOR | 27k | 1/16W |
| R305 | NRSA63J-153X | M.G.RESISTOR | 15k | 1/16W |
| R306 | NRSA63J-102X | M.G.RESISTOR | 1k | 1/16W |
| R307 | NRSA63J-562X | M.G.RESISTOR | 5.6k | 1/16W |
| R308 | NRSA63J-152X | M.G.RESISTOR | 1.5k | 1/16W |

| Symbol No. | Part Nc. | Part Nsms | Dscription | |
|---|---|---|---|---|
| R309 | NRSA63J-332X | M.G.RESISTOR | 3.3k | 1/16W |
| R310 | NRSA63J-223X | M.G.RESISTOR | 22k | 1/16W |
| R311 | NRSA63J-151X | M.G.RESISTOR | 150 | 1/16W |
| R312 | NRVA63D-682X | C.M.F.RESISTOR | 6.8k | 1/16W |
| R313 | NRVA63D-473X | C.M.F.RESISTOR | 47k | 1/16W |
| R314 | NRSA63J-101X | M.G.RESISTOR | 100 | 1/16W |
| R315 | NRVA63D-272X | C.M.F.RESISTOR | 2.7k | 1/16W |
| R316 | NRVA63D-332X | C.M.F.RESISTOR | 3.3k | 1/16W |
| R317 | NRSA63J-101X | M.G.RESISTOR | 100 | 1/16W |
| R318 | NRSA63J-561X | M.G.RESISTOR | 560 | 1/16W |
| R319 | NRSA63J-222X | M.G.RESISTOR | 2.2k | 1/16W |
| R320 | NRSA63J-101X | M.G.RESISTOR | 100 | 1/16W |
| R321 | NRSA63J-101X | M.G.RESISTOR | 100 | 1/16W |
| R322 | NRSA63J-472X | M.G.RESISTOR | 4.7k | 1/16W |
| R324 | NRSA63J-101X | M.G.RESISTOR | 100 | 1/16W |
| R325 | NRSA63J-102X | M.G.RESISTOR | 1k | 1/16W |
| R326 | NRSA63J-101X | M.G.RESISTOR | 100 | 1/16W |
| R327 | NRSA63J-221X | M.G.RESISTOR | 220 | 1/16W |
| R328 | NRSA63J-103X | M.G.RESISTOR | 10k | 1/16W |
| R329 | NRSA63J-103X | M.G.RESISTOR | 10k | 1/16W |
| R330 | NRSA63J-103X | M.G.RESISTOR | 10k | 1/16W |
| R331 | NRSA63J-101X | M.G.RESISTOR | 100 | 1/16W |
| R332 | NRSA63J-101X | M.G.RESISTOR | 100 | 1/16W |
| R334 | NRSA63J-0R0X | M.G.RESISTOR | 0 | 1/16W |
| R335 | NRSA63J-103X | M.G.RESISTOR | 10k | 1/16W |
| R337 | NRSA63J-103X | M.G.RESISTOR | 10k | 1/16W |
| R338 | NRSA63J-103X | M.G.RESISTOR | 10k | 1/16W |
| R339 | NRSA63J-912X | M.G.RESISTOR | 9.1k | 1/16W |
| R340 | NRSA63J-472X | M.G.RESISTOR | 4.7k | 1/16W |
| R341 | NRSA63J-122X | M.G.RESISTOR | 1.2k | 1/16W |
| R342 | NRSA63J-332X | M.G.RESISTOR | 3.3k | 1/16W |
| R343 | NRSA63J-332X | M.G.RESISTOR | 3.3k | 1/16W |
| R344 | NRSA63J-561X | M.G.RESISTOR | 560 | 1/16W |
| R345 | NRSA63J-561X | M.G.RESISTOR | 560 | 1/16W |
| R346 | NRSA63J-333X | M.G.RESISTOR | 33k | 1/16W |
| R347 | NRSA63J-152X | M.G.RESISTOR | 1.5k | 1/16W |
| R348 | NRSA63J-152X | M.G.RESISTOR | 1.6k | 1/16W |
| R349 | NRSA63J-333X | M.G.RESISTOR | 33k | 1/16W |
| R350 | NRSA63J-222X | M.G.RESISTOR | 2.2k | 1/16W |
| R351 | NRSA63J-821X | M.G.RESISTOR | 820 | 1/16W |
| R352 | NRSA63J-821X | M.G.RESISTOR | 820 | 1/16W |
| R353 | NRSA63J-101X | M.G.RESISTOR | 100 | 1/16W |
| R354 | NRSA63J-101X | M.G.RESISTOR | 100 | 1/16W |
| R355 | NRSA63J-222X | M.G.RESISTOR | 2.2k | 1/16W |
| R356 | NRSA63J-222X | M.G.RESISTOR | 2.2k | 1/16W |
| R357 | NRSA63J-101X | M.G.RESISTOR | 100 | 1/16W |
| R358 | NRSA63J-821X | M.G.RESISTOR | 820 | 1/16W |
| R359 | NRSA63J-102X | M.G.RESISTOR | 1k | 1/16W |
| R360 | NRSA63J-103X | M.G.RESISTOR | 10k | 1/16W |
| R361 | NRSA63J-0R0X | M.G.RESISTOR | 0 | 1/16W |
| R362 | NRSA63J-122X | M.G.RESISTOR | 1.2k | 1/16W |
| R363 | NRSA63J-102X | M.G.RESISTOR | 1k | 1/16W |
| R364 | NRSA63J-102X | M.G.RESISTOR | 1k | 1/16W |
| R365 | NRSA63J-101X | M.G.RESISTOR | 100 | 1/16W |
| R366 | NRSA63J-101X | M.G.RESISTOR | 100 | 1/16W |
| R367 | NRSA63J-101X | M.G.RESISTOR | 100 | 1/16W |
| R368 | NRSA63J-101X | M.G.RESISTOR | 100 | 1/16W |
| R371 | NRSA63J-472X | M.G.RESISTOR | 4.7k | 1/16W |
| R372 | NRSA63J-472X | M.G.RESISTOR | 4.7k | 1/16W |

| Symbol No. | Psrt No. | Psrt Nsms | Dsecription | |
|---|---|---|---|---|
| R374 | NRSA63J-101X | M.G.RESISTOR | 100 | 1/16W |
| R375 | NRSA63J-101X | M.G.RESISTOR | 100 | 1/16W |
| R376 | NRSA63J-101X | M.G.RESISTOR | 100 | 1/16W |
| R377 | NRSA63J-101X | M.G.RESISTOR | 100 | 1/16W |
| R378 | NRSA63J-101X | M.G.RESISTOR | 100 | 1/16W |
| R379 | NRSA63J-101X | M.G.RESISTOR | 100 | 1/16W |
| R380 | NRSA63J-101X | M.G.RESISTOR | 100 | 1/16W |
| R381 | NRSA63J-101X | M.G.RESISTOR | 100 | 1/16W |
| R382 | NRSA63J-101X | M.G.RESISTOR | 100 | 1/16W |
| R383 | NRSA63J-101X | M.G.RESISTOR | 100 | 1/16W |
| R384 | NRSA63J-101X | M.G.RESISTOR | 100 | 1/16W |
| R385 | NRSA63J-101X | M.G.RESISTOR | 100 | 1/16W |
| R386 | NRSA63J-101X | M.G.RESISTOR | 100 | 1/16W |
| R387 | NRSA63J-101X | M.G.RESISTOR | 100 | 1/16W |
| R388 | NRSA63J-101X | M.G.RESISTOR | 100 | 1/16W |
| R389 | NRSA63J-101X | M.G.RESISTOR | 100 | 1/16W |
| R390 | NRSA63J-101X | M.G.RESISTOR | 100 | 1/16W |
| R391 | NRSA63J-101X | M.G.RESISTOR | 100 | 1/16W |
| R392 | NRSA63J-101X | M.G.RESISTOR | 100 | 1/16W |
| R393 | NRSA63J-101X | M.G.RESISTOR | 100 | 1/16W |
| R394 | NRSA63J-103X | M.G.RESISTOR | 10k | 1/16W |
| R395 | NRSA63J-103X | M.G.RESISTOR | 10k | 1/16W |
| R396 | NRSA63J-103X | M.G.RESISTOR | 10k | 1/16W |
| R397 | NRSA63J-103X | M.G.RESISTOR | 10k | 1/16W |
| R398 | NRSA63J-103X | M.G.RESISTOR | 10k | 1/16W |
| R399 | NRSA63J-103X | M.G.RESISTOR | 10k | 1/16W |
| R400 | NRSA63J-103X | M.G.RESISTOR | 10k | 1/16W |
| R401 | NRSA63J-103X | M.G.RESISTOR | 10k | 1/16W |
| R402 | NRSA63J-101X | M.G.RESISTOR | 100 | 1/16W |
| R403 | NRSA63J-101X | M.G.RESISTOR | 100 | 1/16W |
| R404 | NRSA63J-101X | M.G.RESISTOR | 100 | 1/16W |
| R405 | NRSA63J-101X | M.G.RESISTOR | 100 | 1/16W |
| R406 | NRSA63J-122X | M.G.RESISTOR | 1.2k | 1/16W |
| R407 | NRSA63J-101X | M.G.RESISTOR | 100 | 1/16W |
| R408 | NRSA63J-103X | M.G.RESISTOR | 10k | 1/16W |
| R410 | NRSA63J-0R0X | M.G.RESISTOR | 0 | 1/16W |
| R412 | NRSA63J-103X | M.G.RESISTOR | 10k | 1/16W |
| R413 | NRSA63J-103X | M.G.RESISTOR | 10k | 1/16W |
| R414 | NRSA63J-103X | M.G.RESISTOR | 10k | 1/16W |
| R415 | NRSA63J-101X | M.G.RESISTOR | 100 | 1/16W |
| R416 | NRSA63J-101X | M.G.RESISTOR | 100 | 1/16W |
| R417 | NRSA63J-332X | M.G.RESISTOR | 3.3k | 1/16W |
| R418 | NRSA63J-101X | M.G.RESISTOR | 100 | 1/16W |
| R420 | NRSA63J-122X | M.G.RESISTOR | 1.2k | 1/16W |
| R426 | NRSA63J-101X | M.G.RESISTOR | 100 | 1/16W |
| R429 | NRSA63J-101X | M.G.RESISTOR | 100 | 1/16W |
| R430 | NRSA63J-101X | M.G.RESISTOR | 100 | 1/16W |
| R431 | NRSA63J-331X | M.G.RESISTOR | 330 | 1/16W |
| R432 | NRSA63J-152X | M.G.RESISTOR | 1.5k | 1/16W |
| R434 | NRSA63J-101X | M.G.RESISTOR | 100 | 1/16W |
| R437 | NRSA63J-101X | M.G.RESISTOR | 100 | 1/16W |
| R439 | NRSA63J-391X | M.G.RESISTOR | 390 | 1/16W |
| R440 | NRSA63J-0R0X | M.G.RESISTOR | 0 | 1/16W |
| R448 | NRSA63J-105X | M.G.RESISTOR | 1M | 1/16W |
| R449 | NRSA63J-0R0X | M.G.RESISTOR | 0 | 1/16W |
| R601 | NRSA63J-333X | M.G.RESISTOR | 33k | 1/16W |
| R602 | NRSA63J-183X | M.G.RESISTOR | 18k | 1/16W |
| R603 | NRSA63J-392X | M.G.RESISTOR | 3.9k | 1/16W |
| R604 | NRSA63J-223X | M.G.RESISTOR | 22k | 1/16W |

| Symbol No. | Psrt No. | Psrt Nsmo | Desoription | |
|---|---|---|---|---|
| R605 | NRSA63J-223X | M.G.RESISTOR | 22k | 1/16W |
| R606 | NRSA63J-472X | M.G.RESISTOR | 4.7k | 1/16W |
| R608 | NRSA63J-152X | M.G.RESISTOR | 1.5k | 1/16W |
| R609 | NRSA63J-561X | M.G.RESISTOR | 560 | 1/16W |
| R610 | NRSA63J-101X | M.G.RESISTOR | 100 | 1/16W |
| R611 | NRSA63J-102X | M.G.RESISTOR | 1k | 1/16W |
| R612 | NRSA63J-222X | M.G.RESISTOR | 2.2k | 1/16W |
| R613 | NRSA63J-102X | M.G.RESISTOR | 1k | 1/16W |
| R614 | NRSA63J-471X | M.G.RESISTOR | 470 | 1/16W |
| R615 | NRSA63J-102X | M.G.RESISTOR | 1k | 1/16W |
| R616 | NRSA63J-101X | M.G.RESISTOR | 100 | 1/16W |
| R617 | NRSA63J-182X | M.G.RESISTOR | 1.8k | 1/16W |
| R618 | NRSA63J-151X | M.G.RESISTOR | 150 | 1/16W |
| R619 | NRSA63J-151X | M.G.RESISTOR | 150 | 1/16W |
| R620 | NRSA63J-102X | M.G.RESISTOR | 1k | 1/16W |
| R621 | NRSA63J-182X | M.G.RESISTOR | 1.8k | 1/16W |
| R622 | NRSA63J-182X | M.G.RESISTOR | 1.8k | 1/16W |
| R623 | NRSA63J-222X | M.G.RESISTOR | 2.2k | 1/16W |
| R624 | NRSA63J-151X | M.G.RESISTOR | 150 | 1/16W |
| R625 | NRSA63J-151X | M.G.RESISTOR | 150 | 1/16W |
| R626 | NRSA63J-333X | M.G.RESISTOR | 33k | 1/16W |
| R627 | NRSA63J-183X | M.G.RESISTOR | 18k | 1/16W |
| R628 | NRSA63J-392X | M.G.RESISTOR | 3.9k | 1/16W |
| R629 | NRSA63J-223X | M.G.RESISTOR | 22k | 1/16W |
| R630 | NRSA63J-223X | M.G.RESISTOR | 22k | 1/16W |
| R631 | NRSA63J-472X | M.G.RESISTOR | 4.7k | 1/16W |
| R633 | NRSA63J-152X | M.G.RESISTOR | 1.5k | 1/16W |
| R634 | NRSA63J-561X | M.G.RESISTOR | 560 | 1/16W |
| R635 | NRSA63J-101X | M.G.RESISTOR | 100 | 1/16W |
| R636 | NRSA63J-102X | M.G.RESISTOR | 1k | 1/16W |
| R637 | NRSA63J-222X | M.G.RESISTOR | 2.2k | 1/16W |
| R638 | NRSA63J-102X | M.G.RESISTOR | 1k | 1/16W |
| R639 | NRSA63J-471X | M.G.RESISTOR | 470 | 1/16W |
| R640 | NRSA63J-102X | M.G.RESISTOR | 1k | 1/16W |
| R641 | NRSA63J-101X | M.G.RESISTOR | 100 | 1/16W |
| R642 | NRSA63J-182X | M.G.RESISTOR | 1.8k | 1/16W |
| R643 | NRSA63J-151X | M.G.RESISTOR | 150 | 1/16W |
| R644 | NRSA63J-151X | M.G.RESISTOR | 150 | 1/16W |
| R645 | NRSA63J-102X | M.G.RESISTOR | 1k | 1/16W |
| R646 | NRSA63J-182X | M.G.RESISTOR | 1.8k | 1/16W |
| R647 | NRSA63J-182X | M.G.RESISTOR | 1.8k | 1/16W |
| R648 | NRSA63J-222X | M.G.RESISTOR | 2.2k | 1/16W |
| R649 | NRSA63J-151X | M.G.RESISTOR | 150 | 1/16W |
| R650 | NRSA63J-151X | M.G.RESISTOR | 150 | 1/16W |
| R651 | NRSA63J-333X | M.G.RESISTOR | 33k | 1/16W |
| R652 | NRSA63J-183X | M.G.RESISTOR | 18k | 1/16W |
| R653 | NRSA63J-392X | M.G.RESISTOR | 3.9k | 1/16W |
| R654 | NRSA63J-223X | M.G.RESISTOR | 22k | 1/16W |
| R655 | NRSA63J-223X | M.G.RESISTOR | 22k | 1/16W |
| R656 | NRSA63J-472X | M.G.RESISTOR | 4.7k | 1/16W |
| R658 | NRSA63J-152X | M.G.RESISTOR | 1.5k | 1/16W |
| R659 | NRSA63J-561X | M.G.RESISTOR | 560 | 1/16W |
| R660 | NRSA63J-101X | M.G.RESISTOR | 100 | 1/16W |
| R661 | NRSA63J-102X | M.G.RESISTOR | 1k | 1/16W |
| R662 | NRSA63J-222X | M.G.RESISTOR | 2.2k | 1/16W |
| R663 | NRSA63J-102X | M.G.RESISTOR | 1k | 1/16W |
| R665 | NRSA63J-152X | M.G.RESISTOR | 1.5k | 1/16W |
| R666 | NRSA63J-101X | M.G.RESISTOR | 100 | 1/16W |
| R667 | NRSA63J-182X | M.G.RESISTOR | 1.8k | 1/16W |

[OUT/GEN]

| Symbol No. | Part No. | Part Nama | Dascription | |
|---|---|---|---|---|
| R668 | NRVA63D-151X | C.M.F.RESISTOR | 150 | 1/16W |
| R669 | NRSA63J-151X | M.G.RESISTOR | 150 | 1/16W |
| R670 | NRSA63J-151X | M.G.RESISTOR | 150 | 1/16W |
| R671 | NRSA63J-102X | M.G.RESISTOR | 1k | 1/16W |
| R672 | NRSA63J-182X | M.G.RESISTOR | 1.8k | 1/16W |
| R673 | NRSA63J-182X | M.G.RESISTOR | 1.8k | 1/16W |
| R674 | NRSA63J-222X | M.G.RESISTOR | 2.2k | 1/16W |
| R675 | NRSA63J-151X | M.G.RESISTOR | 150 | 1/16W |
| R676 | NRSA63J-151X | M.G.RESISTOR | 150 | 1/16W |
| R677 | NRSA63J-333X | M.G.RESISTOR | 33k | 1/16W |
| R678 | NRSA63J-183X | M.G.RESISTOR | 18k | 1/16W |
| R679 | NRSA63J-392X | M.G.RESISTOR | 3.9k | 1/16W |
| R680 | NRSA63J-223X | M.G.RESISTOR | 22k | 1/16W |
| R681 | NRSA63J-223X | M.G.RESISTOR | 22k | 1/16W |
| R682 | NRSA63J-472X | M.G.RESISTOR | 4.7k | 1/16W |
| R684 | NRSA63J-152X | M.G.RESISTOR | 1.5k | 1/16W |
| R685 | NRSA63J-561X | M.G.RESISTOR | 560 | 1/16W |
| R686 | NRSA63J-101X | M.G.RESISTOR | 100 | 1/16W |
| R687 | NRSA63J-102X | M.G.RESISTOR | 1k | 1/16W |
| R688 | NRSA63J-222X | M.G.RESISTOR | 2.2k | 1/16W |
| R689 | NRSA63J-102X | M.G.RESISTOR | 1k | 1/16W |
| R691 | NRSA63J-152X | M.G.RESISTOR | 1.5k | 1/16W |
| R692 | NRSA63J-101X | M.G.RESISTOR | 100 | 1/16W |
| R693 | NRSA63J-182X | M.G.RESISTOR | 1.8k | 1/16W |
| R694 | NRVA63D-151X | C.M.F.RESISTOR | 150 | 1/16W |
| R695 | NRSA63J-151X | M.G.RESISTOR | 150 | 1/16W |
| R696 | NRSA63J-151X | M.G.RESISTOR | 150 | 1/16W |
| R697 | NRSA63J-102X | M.G.RESISTOR | 1k | 1/16W |
| R698 | NRSA63J-182X | M.G.RESISTOR | 1.8k | 1/16W |
| R699 | NRSA63J-182X | M.G.RESISTOR | 1.8k | 1/16W |
| R700 | NRSA63J-222X | M.G.RESISTOR | 2.2k | 1/16W |
| R701 | NRSA63J-151X | M.G.RESISTOR | 150 | 1/16W |
| R702 | NRSA63J-151X | M.G.RESISTOR | 150 | 1/16W |
| R703 | NRSA63J-223X | M.G.RESISTOR | 22k | 1/16W |
| R704 | NRSA63J-103X | M.G.RESISTOR | 10k | 1/16W |
| R705 | NRSA63J-223X | M.G.RESISTOR | 22k | 1/16W |
| R706 | NRSA63J-103X | M.G.RESISTOR | 10k | 1/16W |
| R707 | NRSA63J-101X | M.G.RESISTOR | 100 | 1/16W |
| R709 | NRSA63J-101X | M.G.RESISTOR | 100 | 1/16W |
| R710 | NRSA63J-101X | M.G.RESISTOR | 100 | 1/16W |
| R711 | NRSA63J-102X | M.G.RESISTOR | 1k | 1/16W |
| R712 | NRSA63J-102X | M.G.RESISTOR | 1k | 1/16W |
| R713 | NRSA63J-102X | M.G.RESISTOR | 1k | 1/16W |
| R714 | NRSA63J-102X | M.G.RESISTOR | 1k | 1/16W |
| R715 | NRSA63J-102X | M.G.RESISTOR | 1k | 1/16W |
| R716 | NRSA63F-46R4X | M.G.RESISTOR | 46.4 | 1/16W |
| R717 | NRSA63F-2321X | M.G.RESISTOR | 2.32k | 1/16W |
| R718 | NRSA63J-393X | M.G.RESISTOR | 39k | 1/16W |
| R719 | NRSA63J-392X | M.G.RESISTOR | 3.9k | 1/16W |
| R720 | NRSA63J-122X | M.G.RESISTOR | 1.2k | 1/16W |
| R721 | NRSA63J-122X | M.G.RESISTOR | 1.2k | 1/16W |
| R722 | NRSA63J-392X | M.G.RESISTOR | 3.9k | 1/16W |
| R723 | NRSA63J-101X | M.G.RESISTOR | 100 | 1/16W |
| R724 | NRSA63J-272X | M.G.RESISTOR | 2.7k | 1/16W |
| R725 | NRSA63J-223X | M.G.RESISTOR | 22k | 1/16W |
| R726 | NRSA63J-123X | M.G.RESISTOR | 12k | 1/16W |
| R727 | NRSA63J-272X | M.G.RESISTOR | 2.7k | 1/16W |
| R728 | NRSA63J-223X | M.G.RESISTOR | 22k | 1/16W |
| R729 | NRSA63J-223X | M.G.RESISTOR | 22k | 1/16W |

| Symbol No. | Part No. | Part Nsms | Dsscription | |
|---|---|---|---|---|
| R730 | NRSA63J-472X | M.G.RESISTOR | 4.7k | 1/16W |
| R732 | NRSA63J-152X | M.G.RESISTOR | 1.5k | 1/16W |
| R733 | NRSA63J-562X | M.G.RESISTOR | 5.6k | 1/16W |
| R734 | NRSA63J-101X | M.G.RESISTOR | 100 | 1/16W |
| R735 | NRSA63J-102X | M.G.RESISTOR | 1k | 1/16W |
| R736 | NRSA63J-222X | M.G.RESISTOR | 2.2k | 1/16W |
| R738 | NRSA63J-102X | M.G.RESISTOR | 1k | 1/16W |
| R739 | NRSA63J-152X | M.G.RESISTOR | 1.5k | 1/16W |
| R740 | NRSA63J-101X | M.G.RESISTOR | 100 | 1/16W |
| R741 | NRSA63J-272X | M.G.RESISTOR | 2.7k | 1/16W |
| R742 | NRVA63D-151X | C.M.F.RESISTOR | 150 | 1/16W |
| R743 | NRSA63J-151X | M.G.RESISTOR | 150 | 1/16W |
| R744 | NRSA63J-151X | M.G.RESISTOR | 150 | 1/16W |
| R745 | NRSA63J-182X | M.G.RESISTOR | 1.8k | 1/16W |
| R746 | NRSA63J-182X | M.G.RESISTOR | 1.8k | 1/16W |
| R747 | NRSA63J-102X | M.G.RESISTOR | 1k | 1/16W |
| R748 | NRSA63J-222X | M.G.RESISTOR | 2.2k | 1/16W |
| R749 | NRSA63J-151X | M.G.RESISTOR | 150 | 1/16W |
| R750 | NRSA63J-151X | M.G.RESISTOR | 150 | 1/16W |
| R751 | NRSA63J-151X | M.G.RESISTOR | 150 | 1/16W |
| R752 | NRSA63J-151X | M.G.RESISTOR | 150 | 1/16W |
| R753 | NRSA63J-182X | M.G.RESISTOR | 1.8k | 1/16W |
| R754 | NRSA63J-182X | M.G.RESISTOR | 1.8k | 1/16W |
| R755 | NRSA63J-102X | M.G.RESISTOR | 1k | 1/16W |
| R756 | NRSA63J-222X | M.G.RESISTOR | 2.2k | 1/16W |
| R757 | NRSA63J-151X | M.G.RESISTOR | 150 | 1/16W |
| R758 | NRSA63J-151X | M.G.RESISTOR | 150 | 1/16W |
| R759 | NRSA63J-122X | M.G.RESISTOR | 1.2k | 1/16W |
| R760 | NRSA63J-393X | M.G.RESISTOR | 39k | 1/16W |
| R761 | NRSA63J-392X | M.G.RESISTOR | 3.9k | 1/16W |
| R762 | NRSA63J-102X | M.G.RESISTOR | 1k | 1/16W |
| R763 | NRSA63J-152X | M.G.RESISTOR | 1.5k | 1/16W |
| R764 | NRSA63J-152X | M.G.RESISTOR | 1.5k | 1/16W |
| R765 | NRSA63J-392X | M.G.RESISTOR | 3.9k | 1/16W |
| R766 | NRSA63J-101X | M.G.RESISTOR | 100 | 1/16W |
| R767 | NRSA63J-392X | M.G.RESISTOR | 3.9k | 1/16W |
| R768 | NRSA63J-223X | M.G.RESISTOR | 22k | 1/16W |
| R769 | NRSA63J-471X | M.G.RESISTOR | 470 | 1/16W |
| R770 | NRSA63J-101X | M.G.RESISTOR | 100 | 1/16W |
| R771 | NRSA63J-561X | M.G.RESISTOR | 560 | 1/16W |
| R772 | NRSA63J-272X | M.G.RESISTOR | 2.7k | 1/16W |
| R773 | NRSA63J-151X | M.G.RESISTOR | 150 | 1/16W |
| R774 | NRSA63J-151X | M.G.RESISTOR | 150 | 1/16W |
| R775 | NRSA63J-151X | M.G.RESISTOR | 150 | 1/16W |
| R776 | NRSA63J-182X | M.G.RESISTOR | 1.8k | 1/16W |
| R777 | NRSA63J-182X | M.G.RESISTOR | 1.8k | 1/16W |
| R778 | NRSA63J-123X | M.G.RESISTOR | 12k | 1/16W |
| R779 | NRSA63J-183X | M.G.RESISTOR | 18k | 1/16W |
| R780 | NRSA63J-122X | M.G.RESISTOR | 1.2k | 1/16W |
| R781 | NRSA63J-103X | M.G.RESISTOR | 10k | 1/16W |
| R782 | NRSA63J-222X | M.G.RESISTOR | 2.2k | 1/16W |
| R783 | NRSA63J-151X | M.G.RESISTOR | 150 | 1/16W |
| R784 | NRSA63J-151X | M.G.RESISTOR | 150 | 1/16W |
| R785 | NRSA63J-122X | M.G.RESISTOR | 1.2k | 1/16W |
| R786 | NRSA63J-392X | M.G.RESISTOR | 3.9k | 1/16W |
| R787 | NRSA63J-182X | M.G.RESISTOR | 1.8k | 1/16W |
| R788 | NRSA63J-272X | M.G.RESISTOR | 2.7k | 1/16W |
| R789 | NRSA63J-272X | M.G.RESISTOR | 2.7k | 1/16W |
| R790 | NRSA63J-103X | M.G.RESISTOR | 10k | 1/16W |

| Symbol No. | Part No. | Part Name | Description | |
|---|---|---|---|---|
| R791 | NRSA63J-151X | M.G.RESISTOR | 150 | 1/16W |
| R792 | NRSA63J-151X | M.G.RESISTOR | 150 | 1/16W |
| R793 | NRSA63J-182X | M.G.RESISTOR | 1.8k | 1/16W |
| R794 | NRSA63J-182X | M.G.RESISTOR | 1.8k | 1/16W |
| R795 | NRSA63J-222X | M.G.RESISTOR | 2.2k | 1/16W |
| R796 | NRSA63J-151X | M.G.RESISTOR | 150 | 1/16W |
| R797 | NRSA63J-151X | M.G.RESISTOR | 150 | 1/16W |
| R810 | NRSA63J-101X | M.G.RESISTOR | 100 | 1/16W |
| R811 | NRSA63J-222X | M.G.RESISTOR | 2.2k | 1/16W |
| R812 | NRSA63J-471X | M.G.RESISTOR | 470 | 1/16W |
| R813 | NRVA63D-471X | C.M.F.RESISTOR | 470 | 1/16W |
| R814 | NRSA63J-101X | M.G.RESISTOR | 100 | 1/16W |
| R815 | NRSA63J-222X | M.G.RESISTOR | 2.2k | 1/16W |
| R816 | NRSA63J-471X | M.G.RESISTOR | 470 | 1/16W |
| R817 | NRVA63D-471X | C.M.F.RESISTOR | 470 | 1/16W |
| R818 | NRSA63J-101X | M.G.RESISTOR | 100 | 1/16W |
| R819 | NRSA63J-222X | M.G.RESISTOR | 2.2k | 1/16W |
| R820 | NRSA63J-471X | M.G.RESISTOR | 470 | 1/16W |
| R821 | NRVA63D-471X | C.M.F.RESISTOR | 470 | 1/16W |
| R823 | NRSA63J-1B2X | M.G.RESISTOR | 1.8k | 1/16W |
| R825 | NRSA63J-182X | M.G.RESISTOR | 1.8k | 1/16W |
| R827 | NRSA63J-182X | M.G.RESISTOR | 1.8k | 1/16W |
| R829 | NRSA63J-182X | M.G.RESISTOR | 1.8k | 1/16W |
| R831 | NRSA63J-182X | M.G.RESISTOR | 1.8k | 1/16W |
| R832 | NRSA63J-182X | M.G.RESISTOR | 1.8k | 1/16W |
| R833 | NRSA63J-1B2X | M.G.RESISTOR | 1.8k | 1/16W |
| R834 | NRSA63J-182X | M.G.RESISTOR | 1.8k | 1/16W |
| VR1 | NVP1416-501X | TRIM.RESISTOR | 500 | BBH PHS |
| VR3 | NVP1416-103X | TRIM.RESISTOR | 10k, | C ERR DC |
| VR301 | NVP1416-501X | TRIM.RESISTOR | 500, | INT H |
| VR302 | NVP1416-501X | TRIM.RESISTOR | 500, | SY LEV |
| VR605 | NVP1416-501X | TRIM.RESISTOR | 500, | CPS Y LEV |
| VR606 | NVP1416-501X | TRIM.RESISTOR | 500, | YC Y LEV |
| VR607 | NVP1416-501X | TRIM.RESISTOR | 500, | CPN Y LEV |
| VR608 | NVP1416-102X | TRIM.RESISTOR | 1k, | CPS C LEV |
| RA301 | NRZ0029-101X | RESISTOR ARRAY | 100 | |
| RA302 | NRZ0029-101X | RESISTOR ARRAY | 100 | |
| RA303 | NRZ0029-101X | RESISTOR ARRAY | 100 | |
| RA304 | NRZ0029-101X | RESISTOR ARRAY | 100 | |
| C1 | NEZ0001-107X | E.CAPACITOR | 100 | |
| C2 | NEH91CM-476X | E.CAPACITOR | 47 | 16V |
| C3 | NCS31HJ-151X | CER.CAPACITOR | 150P | 50V |
| C4 | NCS31HJ-150X | CER.CAPACITOR | 15P | 50V |
| C5 | NCS31HJ-151X | CER.CAPACITOR | 150P | 50V |
| C6 | NCB31HK-103X | CER.CAPACITOR | 0.01 | 50V |
| C7 | NC831HK-103X | CER.CAPACITOR | 0.01 | 50V |
| C8 | NCF31CZ-104X | CER.CAPACITOR | 0.1 | 16V |
| C9 | NCF31CZ-104X | CER.CAPACITOR | 0.1 | 16V |
| C10 | NCF31CZ-104X | CER.CAPACITOR | 0.1 | 16V |
| C11 | NBE41CM-335X | TAN.CAPACITOR | 3.3 | 16V |
| C12 | NCB31HK-103X | CER.CAPACITOR | 0.01 | 50V |
| C13 | NC831HK-103X | CER.CAPACITOR | 0.01 | 50V |
| C14 | NC831HK-103X | CER.CAPACITOR | 0.01 | 50V |
| C15 | NEZ0001-107X | E.CAPACITOR | 100 | |
| C16 | NCB31HK-103X | CER.CAPACITOR | 0.01 | 50V |
| C17 | NC831HK-103X | CER.CAPACITOR | 0.01 | 50V |

| Symbol No. | Part No. | Part Name | Description | |
|---|---|---|---|---|
| C18 | NEZ0001-107X | E.CAPACITOR | 100 | |
| C19 | NCB31HK-103X | CER.CAPACITOR | 0.01 | 50V |
| C20 | NCB31HK-103X | CER.CAPACITOR | 0.01 | 50V |
| C21 | NCS31HJ-271X | CER.CAPACITOR | 270P | 50V |
| C22 | NCS31HJ-121X | CER.CAPACITOR | 120P | 50V |
| C23 | NCF31CZ-104X | CER.CAPACITOR | 0.1 | 16V |
| C24 | NCF31CZ-104X | CER.CAPACITOR | 0.1 | 16V |
| C25 | NFV41CJ-104X | FILM CAPACITOR | 0.1 | 16V |
| C26 | NCB31HK-103X | CER.CAPACITOR | 0.01 | 50V |
| C27 | NCF31CZ-104X | CER.CAPACITOR | 0.1 | 16V |
| C28 | NEH91HM-105X | E.CAPACITOR | 1 | 50V |
| C29 | NCB31HK-103X | CER.CAPACITOR | 0.01 | 50V |
| C30 | NEZ0001-107X | E.CAPACITOR | 100 | |
| C31 | NCB31HK-103X | CER.CAPACITOR | 0.01 | 50V |
| C32 | NC831HK-103X | CER.CAPACITOR | 0.01 | 50V |
| C33 | NCS31HJ-471X | CER.CAPACITOR | 470P | 50V |
| C34 | NCS31HJ-151X | CER.CAPACITOR | 150P | 50V |
| C35 | NCB31HK-103X | CER.CAPACITOR | 0.01 | 50V |
| C36 | NCF31CZ-104X | CER.CAPACITOR | 0.1 | 16V |
| C37 | NC831HK-103X | CER.CAPACITOR | 0.01 | 50V |
| C38 | NCF31CZ-104X | CER.CAPACITOR | 0.1 | 16V |
| C39 | NCB31HK-103X | CER.CAPACITOR | 0.01 | 50V |
| C40 | NCF31CZ-104X | CER.CAPACITOR | 0.1 | 16V |
| C42 | NCF31CZ-104X | CER.CAPACITOR | 0.1 | 16V |
| C44 | NCS31HJ-681X | CER.CAPACITOR | 680P | 50V |
| C45 | NC831HJ-681X | CER.CAPACITOR | 680P | 50V |
| C46 | NC831HK-103X | CER.CAPACITOR | 0.01 | 50V |
| C47 | NEH91CM-476X | E.CAPACITOR | 47 | 16V |
| C48 | NCB31HK-103X | CER.CAPACITOR | 0.01 | 50V |
| C49 | NCB31HK-103X | CER.CAPACITOR | 0.01 | 50V |
| C50 | NEZ0001-107X | E.CAPACITOR | 100 | |
| C51 | NCB31HK-103X | CER.CAPACITOR | 0.01 | 50V |
| C52 | NC831HK-103X | CER.CAPACITOR | 0.01 | 50V |
| C53 | NEZ0001-107X | E.CAPACITOR | 100 | |
| C54 | NCB31HK-103X | CER.CAPACITOR | 0.01 | 50V |
| C55 | NCB31HK-103X | CER.CAPACITOR | 0.01 | 50V |
| C56 | NEN21AM-106X | N.P.CAPACITOR | 10 | 10V |
| C57 | NCB31HK-103X | CER.CAPACITOR | 0.01 | 50V |
| C58 | NCB31HK-103X | CER.CAPACITOR | 0.01 | 50V |
| C59 | NEH91HM-105X | E.CAPACITOR | 1 | 50V |
| C60 | NBE51CM-106X | TAN.CAPACITOR | 10 | 16V |
| C61 | NFV41HJ-102X | FILM CAPACITOR | 1000P | 50V |
| C62 | NCB31HK-103X | CER.CAPACITOR | 0.01 | 50V |
| C63 | NBE51CM-106X | TAN.CAPACITOR | 10 | 16V |
| C64 | NFV41HJ-102X | FILM CAPACITOR | 1000P | 50V |
| C65 | NCB31HK-103X | CER.CAPACITOR | 0.01 | 50V |
| C66 | NFV41HJ-102X | FILM CAPACITOR | 1000P | 50V |
| C67 | NBE51VM-335X | TAN.CAPACITOR | 3.3 | 35V |
| C68 | NEZ0001-107X | E.CAPACITOR | 100 | |
| C69 | NCB31HK-103X | CER.CAPACITOR | 0.01 | 50V |
| C70 | NCB31HK-103X | CER.CAPACITOR | 0.01 | 50V |
| C71 | NEZ0001-107X | E.CAPACITOR | 100 | |
| C72 | NCB31HK-103X | CER.CAPACITOR | 0.01 | 50V |
| C73 | NCB31HK-103X | CER.CAPACITOR | 0.01 | 50V |
| C75 | NCF31CZ-104X | CER.CAPACITOR | 0.1 | 16V |
| C76 | NC831HK-103X | CER.CAPACITOR | 0.01 | 50V |
| C77 | NCF31CZ-104X | CER.CAPACITOR | 0.1 | 16V |
| C78 | NC831HK-103X | CER.CAPACITOR | 0.01 | 50V |
| C79 | NEZ0001-107X | E.CAPACITOR | 100 | |

[OUT/GEN]

| Symbol No. | Part No. | Part Nams | Dasoription | |
|---|---|---|---|---|
| C80 | NCB31HK-103X | CER.CAPACITOR | 0.01 | 50V |
| C81 | NCB31HK-103X | CER.CAPACITOR | 0.01 | 50V |
| CB2 | NEZ0001-107X | E.CAPACITOR | 100 | |
| C83 | NCB31HK-103X | CER.CAPACITOR | 0.01 | 50V |
| C84 | NCB31HK-103X | CER.CAPACITOR | 0.01 | 50V |
| CS5 | NCB31HK-103X | CER.CAPACITOR | 0.01 | 50V |
| C86 | NCF31CZ-104X | CER.CAPACITOR | 0.1 | 16V |
| C87 | NCF31CZ-104X | CER.CAPACITOR | 0.1 | 16V |
| C88 | NCF31CZ-104X | CER.CAPACITOR | 0.1 | 16V |
| C89 | NCB31HK-103X | CER.CAPACITOR | 0.01 | 50V |
| C90 | NCS31HJ-271X | CER.CAPACITOR | 270P | 50V |
| C91 | NCS31HJ-220X | CER.CAPACITOR | 22P | 50V |
| C92 | NEH91HM-105X | E.CAPACITOR | 1 | 50V |
| C93 | NCB31HK-103X | CER.CAPACITOR | 0.01 | 50V |
| C94 | NCB31HK-103X | CER.CAPACITOR | 0.01 | 50V |
| C95 | NCB31HK-103X | CER.CAPACITOR | 0.01 | 50V |
| C301 | NEH91HM-105X | E.CAPACITOR | 1 | 50V |
| C302 | NEH91HM-105X | E.CAPACITOR | 1 | 50V |
| C303 | NCB31HK-103X | CER.CAPACITOR | 0.01 | 50V |
| C304 | NEH91CM-476X | E.CAPACITOR | 47 | 16V |
| C305 | NCB31HK-103X | CER.CAPACITOR | 0.01 | 50V |
| C306 | NCB31HK-103X | CER.CAPACITOR | 0.01 | 50V |
| C307 | NEH91CM-476X | E.CAPACITOR | 47 | 16V |
| C30B | NCB31HK-103X | CER.CAPACITOR | 0.01 | 50V |
| C309 | NCB31HK-103X | CER.CAPACITOR | 0.01 | 50V |
| C310 | NCF31CZ-104X | CER.CAPACITOR | 0.1 | 16V |
| C311 | NCF31CZ-104X | CER.CAPACITOR | 0.1 | 16V |
| C312 | NCB31HK-103X | CER.CAPACITOR | 0.01 | 50V |
| C313 | NCB31HK-103X | CER.CAPACITOR | 0.01 | 50V |
| C314 | NEZ0001-107X | E.CAPACITOR | 100 | |
| C315 | NCS31HJ-471X | CER.CAPACITOR | 470P | 50V |
| C316 | NCS31HJ-151X | CER.CAPACITOR | 150P | 50V |
| C317 | NCB31HK-103X | CER.CAPACITOR | 0.01 | 50V |
| C318 | NCS31HJ-471X | CER.CAPACITOR | 470P | 50V |
| C319 | NCS31HJ-151X | CER.CAPACITOR | 150P | 50V |
| C320 | NCB31HK-103X | CER.CAPACITOR | 0.01 | 50V |
| C321 | NCB31HK-103X | CER.CAPACITOR | 0.01 | 50V |
| C322 | NCB31HK-103X | CER.CAPACITOR | 0.01 | 50V |
| C323 | NEH90JM-107X | E.CAPACITOR | 100 | 6.3V |
| C324 | NCB31HK-103X | CER.CAPACITOR | 0.01 | 50V |
| C325 | NCB31HK-103X | CER.CAPACITOR | 0.01 | 50V |
| C326 | NCB31HK-103X | CER.CAPACITOR | 0.01 | 50V |
| C327 | NBE21EM-474X | TAN.CAPACITOR | 0.47 | 25V |
| C328 | NCS31HJ-1B0X | CER.CAPACITOR | 18P | 50V |
| C329 | NCS31HJ-100X | CER.CAPACITOR | 10P | 50V |
| C330 | NCB31HK-103X | CER.CAPACITOR | 0.01 | 50V |
| C331 | NCB31HK-103X | CER.CAPACITOR | 0.01 | 50V |
| C332 | NCB31HK-103X | CER.CAPACITOR | 0.01 | 50V |
| C333 | NCB31HK-103X | CER.CAPACITOR | 0.01 | 50V |
| C334 | NCS31HJ-100X | CER.CAPACITOR | 10P | 50V |
| C335 | NFV41CJ-104X | FILM CAPACITOR | 0.1 | 16V |
| C336 | NCS31HJ-101X | CER.CAPACITOR | 100P | 50V |
| C337 | NCB31HK-103X | CER.CAPACITOR | 0.01 | 50V |
| C338 | NEH90JM-476X | E.CAPACITOR | 47 | 6.3V |
| C339 | NEH90JM-476X | E.CAPACITOR | 47 | 6.3V |
| C340 | NCB31HK-103X | CER.CAPACITOR | 0.01 | 50V |
| C341 | NCB31HK-103X | CER.CAPACITOR | 0.01 | 50V |
| C342 | NCS31HJ-221X | CER.CAPACITOR | 220P | 50V |
| C343 | NCS31HJ-101X | CER.CAPACITOR | 100P | 50V |

| Symbol No. | Part No. | Psrt Nsms | Doscription | |
|---|---|---|---|---|
| C344 | NCS31HJ-330X | CER.CAPACITOR | 33P | 50V |
| C345 | NCS31HJ-271X | CER.CAPACITOR | 270P | 50V |
| C347 | NCB31HK-103X | CER.CAPACITOR | 0.01 | 50V |
| C348 | NCB31HK-103X | CER.CAPACITOR | 0.01 | 50V |
| C349 | NEZ0001-107X | E.CAPACITOR | 100 | |
| C350 | NCB31HK-103X | CER.CAPACITOR | 0.01 | 50V |
| C351 | NCB31HK-103X | CER.CAPACITOR | 0.01 | 50V |
| C352 | NEZ0001-107X | E.CAPACITOR | 100 | |
| C353 | NCB31HK-103X | CER.CAPACITOR | 0.01 | 50V |
| C354 | NCB31HK-103X | CER.CAPACITOR | 0.01 | 50V |
| C355 | NCS31EJ-102X | CER.CAPACITOR | 1000P | 25V |
| C356 | NCB31HK-103X | CER.CAPACITOR | 0.01 | 50V |
| C357 | NEZ0001-107X | E.CAPACITOR | 100 | |
| C358 | NCB31HK-103X | CER.CAPACITOR | 0.01 | 50V |
| C359 | NCB31HK-103X | CER.CAPACITOR | 0.01 | 50V |
| C360 | NCB31HK-103X | CER.CAPACITOR | 0.01 | 50V |
| C361 | NCB31HK-103X | CER.CAPACITOR | 0.01 | 50V |
| C362 | NCB31HK-103X | CER.CAPACITOR | 0.01 | 50V |
| C363 | NCB31HK-103X | CER.CAPACITOR | 0.01 | 50V |
| C364 | NCB31HK-103X | CER.CAPACITOR | 0.01 | 50V |
| C365 | NCB31HK-103X | CER.CAPACITOR | 0.01 | 50V |
| C366 | NCB31HK-103X | CER.CAPACITOR | 0.01 | 50V |
| C367 | NCB31HK-103X | CER.CAPACITOR | 0.01 | 50V |
| C368 | NEZ0001-107X | E.CAPACITOR | 100 | |
| C369 | NCB31HK-103X | CER.CAPACITOR | 0.01 | 50V |
| C370 | NCB31HK-103X | CER.CAPACITOR | 0.01 | 50V |
| C371 | NCB31HK-103X | CER.CAPACITOR | 0.01 | 50V |
| C372 | NCB31HK-103X | CER.CAPACITOR | 0.01 | 50V |
| C373 | NCB31HK-103X | CER.CAPACITOR | 0.01 | 50V |
| C374 | NCB31HK-103X | CER.CAPACITOR | 0.01 | 50V |
| C375 | NCB31HK-103X | CER.CAPACITOR | 0.01 | 50V |
| C376 | NCB31HK-103X | CER.CAPACITOR | 0.01 | 50V |
| C377 | NCS31HJ-5R0X | CER.CAPACITOR | 5RP | 50V |
| C378 | NCB31HK-103X | CER.CAPACITOR | 0.01 | 50V |
| C379 | NFV41HJ-102X | FILM CAPACITOR | 1000P | 50V |
| C380 | NCB31HK-103X | CER.CAPACITOR | 0.01 | 50V |
| C601 | NEZ0001-107X | E.CAPACITOR | 100 | |
| C602 | NCB31HK-103X | CER.CAPACITOR | 0.01 | 50V |
| C603 | NCB31HK-103X | CER.CAPACITOR | 0.01 | 50V |
| C604 | NFV41HJ-332X | FILM CAPACITOR | 3300P | 50V |
| C605 | NFV41HJ-222X | FILM CAPACITOR | 2200P | 50V |
| C606 | NCF31CZ-104X | CER.CAPACITOR | 0.1 | 16V |
| C607 | NCB31HK-103X | CER.CAPACITOR | 0.01 | 50V |
| C608 | NFV41HJ-222X | FILM CAPACITOR | 2200P | 50V |
| C609 | NCB31HK-103X | CER.CAPACITOR | 0.01 | 50V |
| C610 | NCB31HK-103X | CER.CAPACITOR | 0.01 | 50V |
| C611 | NCB31HK-103X | CER.CAPACITOR | 0.01 | 50V |
| C612 | NCS31HJ-100X | CER.CAPACITOR | 10P | 50V |
| C613 | NEH90JM-336X | E.CAPACITOR | 33 | 6.3V |
| C614 | NEH91CM-476X | E.CAPACITOR | 47 | 16V |
| C615 | NCB31HK-103X | CER.CAPACITOR | 0.01 | 50V |
| C616 | NCB31HK-103X | CER.CAPACITOR | 0.01 | 50V |
| C617 | NEH91CM-476X | E.CAPACITOR | 47 | 16V |
| C618 | NCB31HK-103X | CER.CAPACITOR | 0.01 | 50V |
| C619 | NCB31HK-103X | CER.CAPACITOR | 0.01 | 50V |
| C620 | NEZ0001-107X | E.CAPACITOR | 100 | |
| C621 | NCB31HK-103X | CER.CAPACITOR | 0.01 | 50V |
| C622 | NCB31HK-103X | CER.CAPACITOR | 0.01 | 50V |
| C623 | NFV41HJ-332X | FILM CAPACITOR | 3300P | 50V |

| Symbol No. | Part No. | Part Nams | Dascription | |
|---|---|---|---|---|
| C624 | NFV41HJ-222X | FILM CAPACITOR | 2200P | 50V |
| C625 | NCF31CZ-104X | CER.CAPACITOR | 0.1 | 16V |
| C626 | NCB31HK-103X | CER.CAPACITOR | 0.01 | 50V |
| C627 | NFV41HJ-222X | FILM CAPACITOR | 2200P | 50V |
| C628 | NCB31HK-103X | CER.CAPACITOR | 0.01 | 50V |
| C629 | NCB31HK-103X | CER.CAPACITOR | 0.01 | 50V |
| C630 | NCB31HK-103X | CER.CAPACITOR | 0.01 | 50V |
| C631 | NCS31HJ-100X | CER.CAPACITOR | 10P | 50V |
| C632 | NEH90JM-336X | E.CAPACITOR | 33 | 6.3V |
| C633 | NEZ0001-107X | E.CAPACITOR | 100 | |
| C634 | NCB31HK-103X | CER.CAPACITOR | 0.01 | 50V |
| C635 | NCB31HK-103X | CER.CAPACITOR | 0.01 | 50V |
| C636 | NEH91CM-476X | E.CAPACITOR | 47 | 16V |
| C637 | NCB31HK-103X | CER.CAPACITOR | 0.01 | 50V |
| C638 | NCB31HK-103X | CER.CAPACITOR | 0.01 | 50V |
| C639 | NEH91CM-476X | E.CAPACITOR | 47 | 16V |
| C640 | NCB31HK-103X | CER.CAPACITOR | 0.01 | 50V |
| C641 | NCB31HK-103X | CER.CAPACITOR | 0.01 | 50V |
| C642 | NEZ0001-107X | E.CAPACITOR | 100 | |
| C643 | NCB31HK-103X | CER.CAPACITOR | 0.01 | 50V |
| C644 | NCB31HK-103X | CER.CAPACITOR | 0.01 | 50V |
| C645 | NFV41HJ-332X | FILM CAPACITOR | 3300P | 50V |
| C546 | NFV41HJ-222X | FILM CAPACITOR | 2200P | 50V |
| C647 | NCF31CZ-104X | CER.CAPACITOR | 0.1 | 16V |
| C648 | NCB31HK-103X | CER.CAPACITOR | 0.01 | 50V |
| C649 | NFV41HJ-222X | FILM CAPACITOR | 2200P | 50V |
| C650 | NCB31HK-103X | CER.CAPACITOR | 0.01 | 50V |
| C651 | NCB31HK-103X | CER.CAPACITOR | 0.01 | 50V |
| C652 | NCB31HK-103X | CER.CAPACITOR | 0.01 | 50V |
| C653 | NEH90JM-336X | E.CAPACITOR | 33 | 6.3V |
| C654 | NEH91CM-476X | E.CAPACITOR | 47 | 16V |
| C655 | NCB31HK-103X | CER.CAPACITOR | 0.01 | 50V |
| C656 | NCB31HK-103X | CER.CAPACITOR | 0.01 | 50V |
| C657 | NEH91CM-476X | E.CAPACITOR | 47 | 16V |
| C658 | NCB31HK-103X | CER.CAPACITOR | 0.01 | 50V |
| C659 | NCB31HK-103X | CER.CAPACITOR | 0.01 | 50V |
| C660 | NEZ0001-107X | E.CAPACITOR | 100 | |
| C661 | NCB31HK-103X | CER.CAPACITOR | 0.01 | 50V |
| C662 | NCB31HK-103X | CER.CAPACITOR | 0.01 | 50V |
| C663 | NFV41HJ-332X | FILM CAPACITOR | 3300P | 50V |
| C664 | NFV41HJ-222X | FILM CAPACITOR | 2200P | 50V |
| C665 | NCF31CZ-104X | CER.CAPACITOR | 0.1 | 16V |
| C666 | NCB31HK-103X | CER.CAPACITOR | 0.01 | 50V |
| C667 | NFV41HJ-222X | FILM CAPACITOR | 2200P | 50V |
| C668 | NCB31HK-103X | CER.CAPACITOR | 0.01 | 50V |
| C669 | NCB31HK-103X | CER.CAPACITOR | 0.01 | 50V |
| C670 | NCB31HK-103X | CER.CAPACITOR | 0.01 | 50V |
| C671 | NEH90JM-336X | E.CAPACITOR | 33 | 6.3V |
| C672 | NEZ0001-107X | E.CAPACITOR | 100 | |
| C673 | NCB31HK-103X | CER.CAPACITOR | 0.01 | 50V |
| C674 | NCB31HK-103X | CER.CAPACITOR | 0.01 | 50V |
| C675 | NEH91CM-476X | E.CAPACITOR | 47 | 16V |
| C676 | NCB31HK-103X | CER.CAPACITOR | 0.01 | 50V |
| C677 | NCB31HK-103X | CER.CAPACITOR | 0.01 | 50V |
| C678 | NEH91CM-476X | E.CAPACITOR | 47 | 16V |
| C679 | NCB31HK-103X | CER.CAPACITOR | 0.01 | 50V |
| C680 | NCB31HK-103X | CER.CAPACITOR | 0.01 | 50V |
| C681 | NEZ0001-107X | E.CAPACITOR | 100 | |
| C682 | NEZ0001-107X | E.CAPACITOR | 100 | |

| Symbol No. | Part No. | Part Nsmo | Dscription | |
|---|---|---|---|---|
| C683 | NEZ0001-107X | E.CAPACITOR | 100 | |
| C684 | NEZ0001-107X | E.CAPACITOR | 100 | |
| C685 | NEH91CM-476X | E.CAPACITOR | 47 | 16V |
| C686 | NCB31HK-103X | CER.CAPACITOR | 0.01 | 50V |
| C687 | NCB31HK-103X | CER.CAPACITOR | 0.01 | 50V |
| C688 | NCB31HK-103X | CER.CAPACITOR | 0.01 | 50V |
| C689 | NEZ0001-107X | E.CAPACITOR | 100 | |
| C690 | NEZ0001-107X | E.CAPACITOR | 100 | |
| C691 | NCS31HJ-820X | CER.CAPACITOR | 82P | 50V |
| C692 | NCB31HK-103X | CER.CAPACITOR | 0.01 | 50V |
| C693 | NCB31HK-103X | CER.CAPACITOR | 0.01 | 50V |
| C694 | NFV41HJ-332X | FILM CAPACITOR | 3300P | 50V |
| C695 | NFV41CJ-472X | FILM CAPACITOR | 4700P | 16V |
| C696 | NCF31CZ-104X | CER.CAPACITOR | 0.1 | 16V |
| C697 | NCB31HK-103X | CER.CAPACITOR | 0.01 | 50V |
| C698 | NFV41HJ-222X | FILM CAPACITOR | 2200P | 50V |
| C699 | NCB31HK-103X | CER.CAPACITOR | 0.01 | 50V |
| C700 | NCB31HK-103X | CER.CAPACITOR | 0.01 | 50V |
| C701 | NCB31HK-103X | CER.CAPACITOR | 0.01 | 50V |
| C702 | NEH90JM-336X | E.CAPACITOR | 33 | 6.3V |
| C703 | NEH90JM-336X | E.CAPACITOR | 33 | 6.3V |
| C704 | NEZ0001-107X | E.CAPACITOR | 100 | |
| C705 | NCB31HK-103X | CER.CAPACITOR | 0.01 | 50V |
| C706 | NCB31HK-103X | CER.CAPACITOR | 0.01 | 50V |
| C707 | NEH91CM-476X | E.CAPACITOR | 47 | 16V |
| C708 | NCB31HK-103X | CER.CAPACITOR | 0.01 | 50V |
| C709 | NCB31HK-103X | CER.CAPACITOR | 0.01 | 50V |
| C710 | NEH91CM-476X | E.CAPACITOR | 47 | 16V |
| C711 | NCB31HK-103X | CER.CAPACITOR | 0.01 | 50V |
| C712 | NCB31HK-103X | CER.CAPACITOR | 0.01 | 50V |
| C713 | NCF31CZ-104X | CER.CAPACITOR | 0.1 | 16V |
| C714 | NCF31CZ-104X | CER.CAPACITOR | 0.1 | 16V |
| C715 | NCF31CZ-104X | CER.CAPACITOR | 0.1 | 16V |
| C716 | NCF31CZ-104X | CER.CAPACITOR | 0.1 | 16V |
| C717 | NCB31HK-103X | CER.CAPACITOR | 0.01 | 50V |
| C718 | NCB31HK-103X | CER.CAPACITOR | 0.01 | 50V |
| C719 | NCS31HJ-100X | CER.CAPACITOR | 10P | 50V |
| C720 | NEH90JM-336X | E.CAPACITOR | 33 | 6.3V |
| C721 | NEH91CM-476X | E.CAPACITOR | 47 | 16V |
| C722 | NCB31HK-103X | CER.CAPACITOR | 0.01 | 50V |
| C723 | NCB31HK-103X | CER.CAPACITOR | 0.01 | 50V |
| C724 | NEH91CM-476X | E.CAPACITOR | 47 | 16V |
| C725 | NCB31HK-103X | CER.CAPACITOR | 0.01 | 50V |
| C726 | NCB31HK-103X | CER.CAPACITOR | 0.01 | 50V |
| C727 | NCS31HJ-5R0X | CER.CAPACITOR | 5RP | 50V |
| C728 | NCS31HJ-470X | CER.CAPACITOR | 47P | 50V |
| C729 | NCB31HK-103X | CER.CAPACITOR | 0.01 | 50V |
| C730 | NCB31HK-103X | CER.CAPACITOR | 0.01 | 50V |
| C731 | NEH90JM-336X | E.CAPACITOR | 33 | 6.3V |
| C732 | NEZ0001-107X | E.CAPACITOR | 100 | |
| C733 | NCB31HK-103X | CER.CAPACITOR | 0.01 | 50V |
| C734 | NCB31HK-103X | CER.CAPACITOR | 0.01 | 50V |
| C735 | NCF31CZ-104X | CER.CAPACITOR | 0.1 | 16V |
| C736 | NCS31HJ-270X | CER.CAPACITOR | 27P | 50V |
| C737 | NCS31HJ-270X | CER.CAPACITOR | 27P | 50V |
| C738 | NCS31HJ-330X | CER.CAPACITOR | 33P | 50V |
| L1 | NQL024J-8R2X | COIL | 8.2$\mu$H | |
| L2 | NOL024J-820X | COIL | 82$\mu$H | |

[OUT/GEN]

| Symbol No. | Part Nc. | Psrt Nsms | Dsscription |
|---|---|---|---|
| L3 | NQL024J-8R2X | COIL | 8.2mH |
| L301 | NQL024J-101X | COIL | 100μH |
| L302 | NQL024J-1R8X | COIL | 1.8μH |
| L601 | NQL024J-150X | COIL | 15μH |
| L602 | NQL024J-330X | COIL | 33μH |
| LC1 | PGZ01972Z | LC FILTER | |
| LC2 | PGZ01972Z | LC FILTER | |
| LC301 | PGZ01972Z | LC FILTER | |
| LC302 | PGZ01972Z | LC FILTER | |
| LC303 | PGZ01972Z | LC FILTER | |
| LC304 | PGZ01972Z | LC FILTER | |
| LC305 | PGZ01972Z | LC FILTER | |
| X1 | PGZ01522 | CRYSTAL | 14.1875MHz |
| X2 | PGZ01523 | CRYSTAL | 17.734476MHz |
| X301 | PGZ02178 | CRYSTAL | 54MHz |
| S301 | SCV2588-001 | ROTARY CODED SW | SYNC PHASE |
| CN1 | PGZ02142-120 | CONNECTOR | 120PIN |
| CN2 | PGZ02142-100 | CONNECTOR | 100PIN |
| TP1 | SCV1880-001 | TEST POINT | |
| TP2 | SCV1880-001 | TEST POINT | |
| TP3 | SCV1880-001 | TEST POINT | |
| TP4 | SCV1880-001 | TEST POINT | |
| TP5 | SCV1880-001 | TEST POINT | |
| TP6 | SCV1880-001 | TEST POINT | |
| TP7 | SCV1880-001 | TEST POINT | |
| TP8 | SCV1880-001 | TEST POINT | |
| TP9 | SCV1880-001 | TEST POINT | |
| TP10 | SCV1880-001 | TEST POINT | |
| TP11 | SCV1880-001 | TEST POINT | |
| TP12 | SCV1880-001 | TEST POINT | |
| TP13 | SCV1880-001 | TEST POINT | |
| TP14 | SCV1880-001 | TEST POINT | |
| TP15 | SCV1880-001 | TEST POINT | |
| TP16 | SCV1880-001 | TEST POINT | |
| TP51 | SCV1880-001 | TEST POINT | |
| TP52 | SCV1880-001 | TEST POINT | |
| TP53 | SCV1880-001 | TEST POINT | |
| TP54 | SCV1880-001 | TEST POINT | |
| TP55 | SCV1880-001 | TEST POINT | |
| TP56 | SCV1880-001 | TEST POINT | |
| TP301 | SCV1880-001 | TEST POINT | |
| TP302 | SCV1880-001 | TEST POINT | |
| TP303 | SCV1880-001 | TEST POINT | |
| TP304 | SCV1880-001 | TEST POINT | |
| TP305 | SCV1880-001 | TEST POINT | |
| TP306 | SCV1880-001 | TEST POINT | |
| TP307 | SCV1880-001 | TEST POINT | |
| TP308 | SCV1880-001 | TEST POINT | |
| TP309 | SCV1880-001 | TEST POINT | |
| TP310 | SCV1880-001 | TEST POINT | |
| TP311 | SCV1880-001 | TEST POINT | |
| TP312 | SCV1880-001 | TEST POINT | |

| Symbcl No. | Psrt Nc. | Psrt Nsms | Dsscription |
|---|---|---|---|
| TP313 | SCV1880-001 | TEST POINT | |
| TP314 | SCV1880-001 | TEST POINT | |
| TP351 | SCV1880-001 | TEST POINT | |
| TP352 | SCV1880-001 | TEST POINT | |
| TP353 | SCV1880-001 | TEST POINT | |
| TP354 | SCV1880-001 | TEST POINT | |
| TP381 | SCV1880-001 | TEST POINT | |
| TP382 | SCV1880-001 | TEST POINT | |
| TP601 | SCV1880-001 | TEST POINT | |
| TP602 | SCV1880-001 | TEST POINT | |
| TP603 | SCV1880-001 | TEST POINT | |
| TP604 | SCV1880-001 | TEST POINT | |
| TP605 | SCV1880-001 | TEST POINT | |
| TP606 | SCV1880-001 | TEST POINT | |
| TP607 | SCV1880-001 | TEST POINT | |
| TP608 | SCV1880-001 | TEST POINT | |
| TP609 | SCV1880-001 | TEST POINT | |
| TP651 | SCV1880-001 | TEST POINT | |
| TP652 | SCV1880-001 | TEST POINT | |
| TP653 | SCV1880-001 | TEST POINT | |
| TP654 | SCV1880-001 | TEST POINT | |
| TP655 | SCV1880-001 | TEST POINT | |
| TP656 | SCV1880-001 | TEST POINT | |
| TP657 | SCV1880-001 | TEST POINT | |
| T81 | PGZ02228 | EARTH LUG | |
| TB2 | PGZ02228 | EARTH LUG | |
| T83 | PGZ02228 | EARTH LUG | |
| T84 | PGZ0222S | EARTH LUG | |

## 5.9 RF PROCESS2 BOABD ASSEMBLY LIST [1][8]

**SLK1035-M3A** [1][8]□□□□□□□

| Symboi No. | Psrt No. | Psrt Nsms | Doscription |
|---|---|---|---|
| IC1 | TC4053BF-X | I.C.(M) | TOSHIBA |
| IC2 | SSI32F8001 | I.C.(M) | TDK |
| IC3 | CLC520AJE-X | I.C.(M) | COMLINEAR |
| IC4 | CLC401AJE-X | I.C.(M) | COMLINEAR |
| IC5 | LM360M-X | I.C.(M) | NS |
| IC6 | UPC4074G2-X | I.C.(M) | NEC |
| IC7 | NJM7805FA | I.C.(M) | JRC |
| IC8 | NJM79M05FA | I.C.(M) | JRC |
| IC10 | JCL0027 | I.C.(M) | JVC |
| IC11 | DS90C031TM-X | I.C.(M) | NS |
| IC12 | TC74VHCT04F-X | I.C.(M) | TOSHIBA |
| IC13 | LM318M-X | I.C.(M) | NS |
| IC14 | MC10H116M-X | I.C.(M) | MOTOROLA |
| IC15 | UPC4074G2-X | I.C.(M) | NEC |
| IC16 | TC4053BF-X | I.C.(M) | TOSHIBA |
| IC20 | MC10H125M-X | I.C.(M) | MOTOROLA |
| IC21 | TC74VHC04F-X | I.C.(M) | TOSHIBA |
| IC22 | TC7W04F-X | I.C.(M) | TOSHIBA |
| IC28 | UPC4074G2-X | I.C.(M) | NEC |
| IC30 | MC33269DR2-3.3 | I.C.(M) | MOTOROLA |
| IC32 | TC74HC0BAF-X | I.C.(M) | TOSHIBA |
| IC33 | MC74HC74AF-X | I.C.(M) | MOTOROLA |
| Q1 | 2SC3735/4-5/-X | TRANSISTOR | NEC |
| Q2 | 2SC3735/4-5/-X | TRANSISTOR | NEC |
| O3 | 2SC3735/4-5/-X | TRANSISTOR | NEC |
| Q4 | 2SC3735/4-5/-X | TRANSISTOR | NEC |
| Q5 | 2SC3735/4-5/-X | TRANSISTOR | NEC |
| Q6 | 2SC3735/4-5/-X | TRANSISTOR | NEC |
| Q7 | 2SA1462/3-4/-X | TRANSISTOR | NEC |
| Q8 | 2SC3735/4-5/-X | TRANSISTOR | NEC |
| Q9 | 2SC3735/4-5/-X | TRANSISTOR | NEC |
| Q10 | 2SC3735/4-5/-X | TRANSISTOR | NEC |
| Q11 | 2SC3735/4-5/-X | TRANSISTOR | NEC |
| Q12 | 2SA1462/3-4/-X | TRANSISTOR | NEC |
| Q13 | 2SC3735/4-5/-X | TRANSISTOR | NEC |
| O14 | 2SC3735/4-5/-X | TRANSISTOR | NEC |
| Q15 | 2SC3735/4-5/-X | TRANSISTOR | NEC |
| Q16 | 2SA1462/3-4/-X | TRANSISTOR | NEC |
| Q17 | FA1A4M-X | TRANSISTOR | NEC |
| Q18 | 2SA1462/3-4/-X | TRANSISTOR | NEC |
| Q19 | 2SA1462/3-4/-X | TRANSISTOR | NEC |
| Q20 | 2SA1462/3-4/-X | TRANSISTOR | NEC |
| Q21 | 2SC3735/4-5/-X | TRANSISTOR | NEC |
| Q22 | 2SC3735/4-5/-X | TRANSISTOR | NEC |
| Q23 | 2SC3735/4-5/-X | TRANSISTOR | NEC |
| O24 | 2SC3735/4-5/-X | TRANSISTOR | NEC |
| Q25 | 2SA1462/3-4/-X | TRANSISTOR | NEC |
| Q26 | 2SA1462/3-4/-X | TRANSISTOR | NEC |
| O27 | 2SA1462/3-4/-X | TRANSISTOR | NEC |
| Q28 | FA1A4M-X | TRANSISTOR | NEC |
| Q29 | FA1A4M-X | TRANSISTOR | NEC |
| Q30 | FA1A4M-X | TRANSISTOR | NEC |
| Q31 | FA1A4M-X | TRANSISTOR | NEC |
| O32 | 2SA1462/3-4/-X | TRANSISTOR | NEC |
| O33 | 2SA1462/3-4/-X | TRANSISTOR | NEC |
| O38 | 2SK1228-X | FET | NEC |
| O39 | FA1A4M-X | TRANSISTOR | NEC |
| O40 | FA1A4M-X | TRANSISTOR | NEC |

| Symboi No. | Psrt No. | Psrt Nsms | Description | |
|---|---|---|---|---|
| Q41 | FA1A4M-X | TRANSISTOR | NEC | |
| Q42 | FA1A4M-X | TRANSISTOR | NEC | |
| O43 | FA1A4M-X | TRANSISTOR | NEC | |
| Q44 | FA1A4M-X | TRANSISTOR | NEC | |
| Q45 | FA1A4M-X | TRANSISTOR | NEC | |
| Q66 | FA1A4M-X | TRANSISTOR | NEC | |
| Q100 | 2SC3735/4-5/-X | TRANSISTOR | NEC | |
| D1 | RB731U-X | DIODE | ROHM | |
| D2 | RB731U-X | DIOOE | ROHM | |
| D3 | RB731U-X | DIODE | ROHM | |
| D4 | R8731U-X | DIODE | ROHM | |
| D5 | DAN202K-X | DIODE | ROHM | |
| D6 | R8731U-X | DIODE | ROHM | |
| D7 | DAN202K-X | DIODE | ROHM | |
| LD1 | SLR-55MC3F | LED | ROHM | |
| R1 | NRSA63J-151X | M.G.RESISTOR | 150 | 1/16W |
| R2 | NRSA63J-221X | M.G.RESISTOR | 220 | 1/16W |
| R4 | NRSA63J-820X | M.G.RESISTOR | 82 | 1/16W |
| R5 | NRSA63J-103X | M.G.RESISTOR | 10k | 1/16W |
| R6 | NRSA63J-100X | M.G.RESISTOR | 10 | 1/16W |
| R7 | NRSA63J-223X | M.G.RESISTOR | 22k | 1/16W |
| R8 | NRSA63J-103X | M.G.RESISTOR | 10k | 1/16W |
| R9 | NRSA63J-100X | M.G.RESISTOR | 10 | 1/16W |
| R10 | NRSA63J-223X | M.G.RESISTOR | 22k | 1/16W |
| R11 | NRSA63J-102X | M.G.RESISTOR | 1k | 1/16W |
| R12 | NRSA63J-103X | M.G.RESISTOR | 10k | 1/16W |
| R13 | NRSA63J-560X | M.G.RESISTOR | 56 | 1/16W |
| R14 | NRSA63J-102X | M.G.RESISTOR | 1k | 1/16W |
| R15 | NRSA63J-183X | M.G.RESISTOR | 18k | 1/16W |
| R16 | NRSA63J-103X | M.G.RESISTOR | 10k | 1/16W |
| R17 | NRSA63J-100X | M.G.RESISTOR | 10 | 1/16W |
| R18 | NRSA63J-681X | M.G.RESISTOR | 680 | 1/16W |
| R19 | NRSA63J-471X | M.G.RESISTOR | 470 | 1/16W |
| R20 | NRSA63J-470X | M.G.RESISTOR | 47 | 1/16W |
| R21 | NRSA63J-182X | M.G.RESISTOR | 1.8k | 1/16W |
| R22 | NRSA63J-100X | M.G.RESISTOR | 10 | 1/16W |
| R23 | NRSA63J-102X | M.G.RESISTOR | 1k | 1/16W |
| R24 | NRSA63J-331X | M.G.RESISTOR | 330 | 1/16W |
| R25 | NRSA63J-181X | M.G.RESISTOR | 180 | 1/16W |
| R26 | NRSA63J-151X | M.G.RESISTOR | 150 | 1/16W |
| R27 | NRSA63J-331X | M.G.RESISTOR | 330 | 1/16W |
| R2B | NRSA63J-221X | M.G.RESISTOR | 220 | 1/16W |
| R29 | NRSA63J-100X | M.G.RESISTOR | 10 | 1/16W |
| R30 | NRSA63J-392X | M.G.RESISTOR | 3.9k | 1/16W |
| R31 | NRSA63J-223X | M.G.RESISTOR | 22k | 1/16W |
| R32 | NRSA63J-392X | M.G.RESISTOR | 3.9k | 1/16W |
| R33 | NRSA63J-223X | M.G.RESISTOR | 22k | 1/16W |
| R34 | NRSA63J-102X | M.G.RESISTOR | 1k | 1/16W |
| R35 | NRSA63J-102X | M.G.RESISTOR | 1k | 1/16W |
| R36 | NRSA63J-102X | M.G.RESISTOR | 1k | 1/16W |
| R37 | NRSA63J-151X | M.G.RESISTOR | 150 | 1/16W |
| R38 | NRSA63J-102X | M.G.RESISTOR | 1k | 1/16W |
| R39 | NRSA63J-102X | M.G.RESISTOR | 1k | 1/16W |
| R40 | NRSA63J-182X | M.G.RESISTOR | 1.8k | 1/16W |